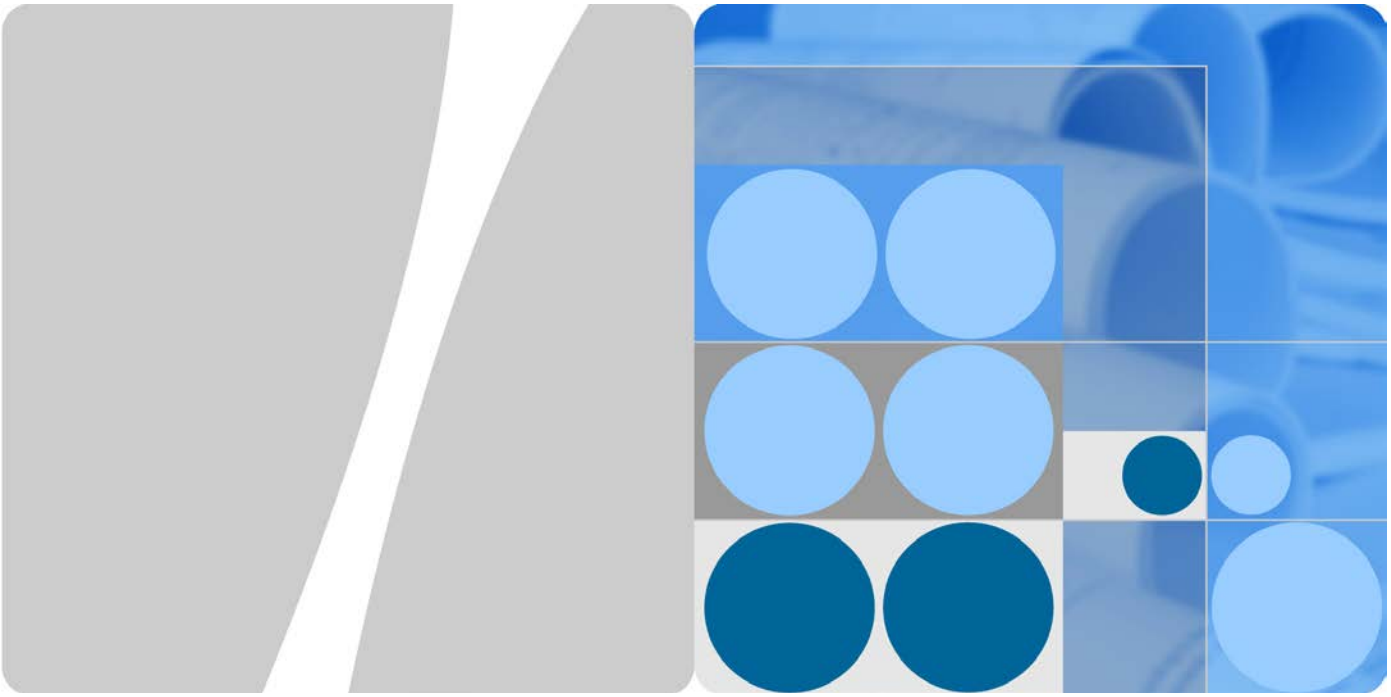

SUN2000-(3KTL-10KTL)-M1

User Manual

Issue	**01**
Date	**2020-09-30**

HUAWEI TECHNOLOGIES CO., LTD.

Copyright © Huawei Technologies Co., Ltd. 2020. All rights reserved.

No part of this document may be reproduced or transmitted in any form or by any means without prior written consent of Huawei Technologies Co., Ltd.

Trademarks and Permissions

HUAWEI and other Huawei trademarks are trademarks of Huawei Technologies Co., Ltd.

All other trademarks and trade names mentioned in this document are the property of their respective holders.

Notice

The purchased products, services and features are stipulated by the contract made between Huawei and the customer. All or part of the products, services and features described in this document may not be within the purchase scope or the usage scope. Unless otherwise specified in the contract, all statements, information, and recommendations in this document are provided "AS IS" without warranties, guarantees or representations of any kind, either express or implied.

The information in this document is subject to change without notice. Every effort has been made in the preparation of this document to ensure accuracy of the contents, but all statements, information, and recommendations in this document do not constitute a warranty of any kind, express or implied.

Huawei Technologies Co., Ltd.

Address: Huawei Industrial Base
Bantian, Longgang
Shenzhen 518129
People's Republic of China

Website: https://e.huawei.com

About This Document

Overview

This document describes the SUN2000-3KTL-M1, SUN2000-4KTL-M1, SUN2000-5KTL-M1, SUN2000-6KTL-M1, SUN2000-8KTL-M1, and SUN2000-10KTL-M1 (SUN2000 for short) in terms of their installation, electrical connections, commissioning, maintenance, and troubleshooting. Before installing and operating the SUN2000, ensure that you are familiar with the features, functions, and safety precautions provided in this document.

NOTE

The SUN2000-8KTL-M1 and SUN2000-10KTL-M1 are not applicable to Australia.

Intended Audience

This document is applicable to:

- Installers
- Users

Symbol Conventions

The symbols that may be found in this document are defined as follows:

Symbol	Description
DANGER	Indicates a hazard with a high level of risk which, if not avoided, will result in death or serious injury.
WARNING	Indicates a hazard with a medium level of risk which, if not avoided, could result in death or serious injury.
CAUTION	Indicates a hazard with a low level of risk which, if not avoided, could result in minor or moderate injury.
NOTICE	Indicates a potentially hazardous situation which, if not avoided, could result in equipment damage, data loss, performance deterioration, or unanticipated results. Notice is used to address practices not related to personal injury.

Copyright © Huawei Technologies Co., Ltd.

Symbol	Description
NOTE	Supplements the important information in the main text. NOTE is used to address information not related to personal injury, equipment damage, and environment deterioration.

Change History

Changes between document issues are cumulative. The latest document issue contains all the changes made in earlier issues.

Issue 01 (2020-09-30)

This issue is used for first office application (FOA).

 Copyright © Huawei Technologies Co., Ltd.

Contents

About This Document ii

1 Safety Information 1

1.1 General Safety 1
1.2 Personnel Requirements 2
1.3 Electrical Safety 3
1.4 Installation Environment Requirements 4
1.5 Mechanical Safety 4
1.6 Commissioning 5
1.7 Maintenance and Replacement 6

2 Overview 7

2.1 Product Introduction 7
2.2 Appearance 10
2.3 Label Description 12
2.3.1 Enclosure Labels 12
2.3.2 Product Nameplate 13
2.4 Working Principles 14
2.4.1 Circuit Diagram 14
2.4.2 Working Modes 14

3 Storage 16

4 Installation 17

4.1 Checking Before Installation 17
4.2 Tools 17
4.3 Determining the Installation Position 19
4.3.1 Environment Requirements 19
4.3.2 Space Requirements 19
4.4 Moving the SUN2000 23
4.5 Installing the Mounting Bracket 24
4.5.1 Wall-mounted Installation 25
4.5.2 Support-mounted Installation 27

5 Electrical Connections 32

5.1 Installation Preparation 32

5.2 Connecting the PE cable 34
5.3 Connecting the AC Output Power Cable 37
5.4 Installing DC input power cables 41
5.5 (Optional) Connecting Battery Cables 45
5.6 Install the Smart Dongle 47
5.7 (Optional) Connecting the Signal Cable 49
5.7.1 Connecting the RS485 Communications Cable (Inverter Cascading) 52
5.7.2 Connecting the RS485 Communications Cable (Smart Power Sensor) 53
5.7.3 Connecting an RS485 Communications Cable (Between a Power Meter and a Battery) 56
5.7.4 Connecting the Power Grid Scheduling Signal Cable 57
5.7.5 Connecting a Signal Cable to the Smart Backup Box 59

6 Commissioning 61

6.1 Checking Before Power-On 61
6.2 SUN2000 power-on 62

7 Man-Machine Interaction 67

7.1 App Commissioning 67
7.1.1 Downloading the FusionSolar App 67
7.1.2 (Optional) Registering an Installer Account 68
7.1.3 Creating a PV Plant and a User 69
7.1.4 (Optional) Setting the Physical Layout of the Smart PV Optimizers 69
7.1.5 Detect optimizer disconnection 72
7.2 Parameters Settings 72
7.2.1 Energy Control 72
7.2.1.1 Grid-tied Point Control 73
7.2.1.2 Battery Control 76
7.2.2 AFCI 80
7.2.3 IPS Check (for Italy CEI0-21 Grid Code Only) 82
7.3 SmartLogger Networking Scenario 84

8 Maintenance 85

8.1 SUN2000 Power-Off 85
8.2 Routine Maintenance 86
8.3 Troubleshooting 86

9 Handling the Inverter 94

9.1 Removing the SUN2000 94
9.2 Packing the SUN2000 94
9.3 Disposing of the SUN2000 94

10 Technical Specifications 95

10.1 SUN2000 Technical Specifications 95
10.2 Optimizer Technical Specifications 100

A Grid Code **103**

B Device Commissioning **106**

C Resetting Password **109**

D Rapid Shutdown **112**

E Locating Insulation Resistance Faults **113**

F Acronyms and Abbreviations **116**

1 Safety Information

1.1 General Safety

Statement

Before installing, operating, and maintaining the equipment, read this document and observe all the safety instructions on the equipment and in this document.

The "NOTICE", "CAUTION", "WARNING", and "DANGER" statements in this document do not cover all the safety instructions. They are only supplements to the safety instructions. Huawei will not be liable for any consequence caused by the violation of general safety requirements or design, production, and usage safety standards.

Ensure that the equipment is used in environments that meet its design specifications. Otherwise, the equipment may become faulty, and the resulting equipment malfunction, component damage, personal injuries, or property damage are not covered under the warranty.

Follow local laws and regulations when installing, operating, or maintaining the equipment. The safety instructions in this document are only supplements to local laws and regulations.

Huawei will not be liable for any consequences of the following circumstances:

- Operation beyond the conditions specified in this document
- Installation or use in environments which are not specified in relevant international or national standards
- Unauthorized modifications to the product or software code or removal of the product
- Failure to follow the operation instructions and safety precautions on the product and in this document
- Equipment damage due to force majeure, such as earthquakes, fire, and storms
- Damage caused during transportation by the customer
- Storage conditions that do not meet the requirements specified in this document

General Requirements

 Copyright © Huawei Technologies Co., Ltd.

DANGER

Do not work with power on during installation.

- Do not install, use, or operate outdoor equipment and cables (including but not limited to moving equipment, operating equipment and cables, inserting connectors to or removing connectors from signal ports connected to outdoor facilities, working at heights, and performing outdoor installation) in harsh weather conditions such as lightning, rain, snow, and level 6 or stronger wind.
- After installing the equipment, remove idle packing materials such as cartons, foam, plastics, and cable ties from the equipment area.
- In the case of a fire, immediately leave the building or the equipment area, and turn on the fire alarm bell or make an emergency call. Do not enter the building on fire in any case.
- Do not scrawl, damage, or block any warning label on the equipment.
- Tighten the screws using tools when installing the equipment.
- Understand the components and functioning of a grid-tied PV power system and relevant local standards.
- Repaint any paint scratches caused during equipment transportation or installation in a timely manner. Equipment with scratches cannot be exposed to an outdoor environment for a long period of time.
- Do not open the host panel of the equipment.

Personal Safety

- If there is a probability of personal injury or equipment damage during operations on the equipment, immediately stop the operations, report the case to the supervisor, and take feasible protective measures.
- Use tools correctly to avoid hurting people or damaging the equipment.
- Do not touch the energized equipment, as the enclosure is hot.

1.2 Personnel Requirements

- Personnel who plan to install or maintain Huawei equipment must receive thorough training, understand all necessary safety precautions, and be able to correctly perform all operations.
- Only qualified professionals or trained personnel are allowed to install, operate, and maintain the equipment.
- Only qualified professionals are allowed to remove safety facilities and inspect the equipment.
- Personnel who will operate the equipment, including operators, trained personnel, and professionals, should possess the local national required qualifications in special operations such as high-voltage operations, working at heights, and operations of special equipment.
- Only professionals or authorized personnel are allowed to replace the equipment or components (including software).

 Copyright © Huawei Technologies Co., Ltd.

NOTE

- Professionals: personnel who are trained or experienced in equipment operations and are clear of the sources and degree of various potential hazards in equipment installation, operation, and maintenance
- Trained personnel: personnel who are technically trained, have required experience, are aware of possible hazards on themselves in certain operations, and are able to take protective measures to minimize the hazards on themselves and other people
- Operators: operation personnel who may come in contact with the equipment, except trained personnel and professionals

1.3 Electrical Safety

Grounding

- For the equipment that needs to be grounded, install the ground cable first when installing the equipment and remove the ground cable last when removing the equipment.
- Do not damage the ground conductor.
- Do not operate the equipment in the absence of a properly installed ground conductor.
- Ensure that the equipment is connected permanently to the protective ground. Before operating the equipment, check its electrical connection to ensure that it is securely grounded.

General Requirements

DANGER

Before connecting cables, ensure that the equipment is intact. Otherwise, electric shocks or fire may occur.

- Ensure that all electrical connections comply with local electrical standards.
- Obtain approval from the local electric utility company before using the equipment in grid-tied mode.
- Ensure that the cables you prepared meet local regulations.
- Use dedicated insulated tools when performing high-voltage operations.

AC and DC Power

DANGER

Do not connect or disconnect power cables with power on. Transient contact between the core of the power cable and the conductor will generate electric arcs or sparks, which may cause fire or personal injury.

- Before making electrical connections, switch off the disconnector on the upstream device to cut off the power supply if people may contact energized components.

 Copyright © Huawei Technologies Co., Ltd.

- Before connecting a power cable, check that the label on the power cable is correct.
- If the equipment has multiple inputs, disconnect all the inputs before operating the equipment.

Cabling

- When routing cables, ensure that a distance of at least 30 mm exists between the cables and heat-generating components or areas. This prevents damage to the insulation layer of the cables.
- Bind cables of the same type together. When routing cables of different types, ensure that they are at least 30 mm away from each other.
- Ensure that the cables used in a grid-tied PV power system are properly connected and insulated and meet specifications.

1.4 Installation Environment Requirements

- Ensure that the equipment is installed in a well ventilated environment.
- To prevent fire due to high temperature, ensure that the ventilation vents or heat dissipation system are not blocked when the equipment is running.
- Do not expose the equipment to flammable or explosive gas or smoke. Do not perform any operation on the equipment in such environments.

1.5 Mechanical Safety

Using Ladders

- Use wooden or fiberglass ladders when you need to perform live working at heights.
- When a step ladder is used, ensure that the pull ropes are secured and the ladder is held firm.
- Before using a ladder, check that it is intact and confirm its load bearing capacity. Do not overload it.
- Ensure that the wider end of the ladder is at the bottom, or protective measures have been taken at the bottom to prevent the ladder from sliding.
- Ensure that the ladder is securely positioned. The recommended angle for a ladder against the floor is 75 degrees, as shown in the following figure. An angle rule can be used to measure the angle.

 Copyright © Huawei Technologies Co., Ltd.

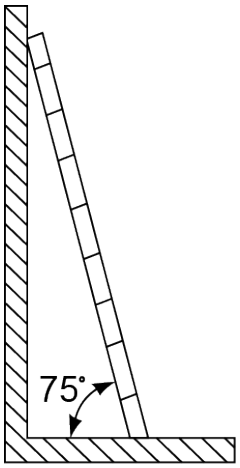

PI02SC0008

- When climbing a ladder, take the following precautions to reduce risks and ensure safety:
  - Keep your body steady.
  - Do not climb higher than the fourth rung of the ladder from the top.
  - Ensure that your body's center of gravity does not shift outside the legs of the ladder.

Drilling Holes

When drilling holes into a wall or floor, observe the following safety precautions:

- Wear goggles and protective gloves when drilling holes.
- When drilling holes, protect the equipment from shavings. After drilling, clean up any shavings that have accumulated inside or outside the equipment.

Moving Heavy Objects

- Be cautious to avoid injury when moving heavy objects.

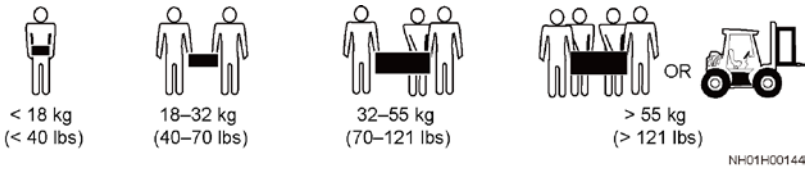

- When moving the equipment by hand, wear protective gloves to prevent injuries.

1.6 Commissioning

When the equipment is powered on for the first time, ensure that professional personnel set parameters correctly. Incorrect settings may result in inconsistency with local certification and affect the normal operation of the equipment.

1.7 Maintenance and Replacement

DANGER

High voltage generated by the equipment during operation may cause an electric shock, which could result in death, serious injury, or serious property damage. Prior to maintenance, power off the equipment and strictly comply with the safety precautions in this document and relevant documents.

- Maintain the equipment with sufficient knowledge of this document and using proper tools and testing equipment.
- Before maintaining the equipment, power it off and follow the instructions on the delayed discharge label to ensure that the equipment is powered off.
- Place temporary warning signs or erect fences to prevent unauthorized access to the maintenance site.
- If the equipment is faulty, contact your dealer.
- The equipment can be powered on only after all faults are rectified. Failing to do so may escalate faults or damage the equipment.

 Copyright © Huawei Technologies Co., Ltd.

2 Overview

2.1 Product Introduction

Functions

The SUN2000 inverter is a three-phase grid-tied PV string inverter that converts the DC power generated by PV strings into AC power and feeds the power into the power grid.

Model

This document covers the following SUN2000 models:

- SUN2000-3KTL-M1
- SUN2000-4KTL-M1
- SUN2000-5KTL-M1
- SUN2000-6KTL-M1
- SUN2000-8KTL-M1
- SUN2000-10KTL-M1

NOTE

The SUN2000-8KTL-M1 and SUN2000-10KTL-M1 are not applicable to Australia.

Figure 2-1 Model description (using SUN2000-5KTL-M1 as an example)

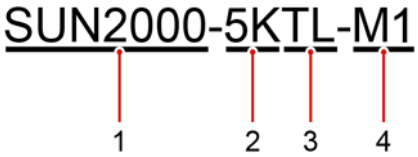

Table 2-1 Model description

Identifier	Description	Value
1	Series name	SUN2000: three-phase grid-tied PV string inverter
2	Power class	• 3K: rated power of 3 kW

Identifier	Description	Value
		• 4K: rated power of 4 kW • 5K: rated power of 5 kW • 6K: rated power of 6 kW • 8K: rated power of 8 kW • 10K: rated power of 10 kW
3	Topology	TL: transformerless
4	Product code	M1: product series with an input voltage level of 1100 V DC

Networking Application

The SUN2000 applies to residential rooftop grid-tied systems and small-sized ground PV plant grid-tied systems. Typically, a grid-tied system consists of PV strings, grid-tied inverters, AC switches, and power distribution units.

Figure 2-2 Networking application (dashed boxes indicate optional components)

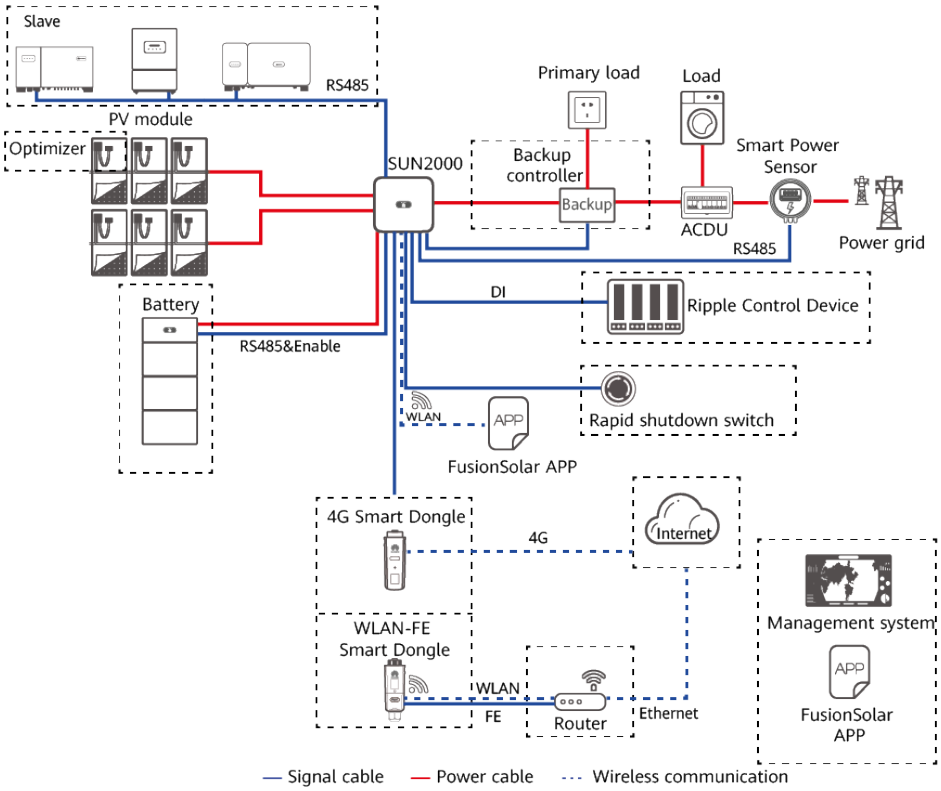

NOTE

- If the built-in WiFi module of the SUN2000 connects to the app, only device commissioning can be performed.

- In the SUN2000 cascading scenario, the master inverter model can be SUN2000-(3KTL-10KTL)-M1, and the slave inverter model can be SUN2000-(3KTL-10KTL)-M1, SUN2000-(5KTL–20KTL)-M0, SUN2000-50KTL/60KTL/65KTL-M0, SUN2000-29.9KTL/36KTL, or SUN2000-33KTL-A.

Supported Power Grid Types

The SUN2000 supports TN-S, TN-C, TN-C-S, TT, and IT power grids.

Figure 2-3 Power grid types

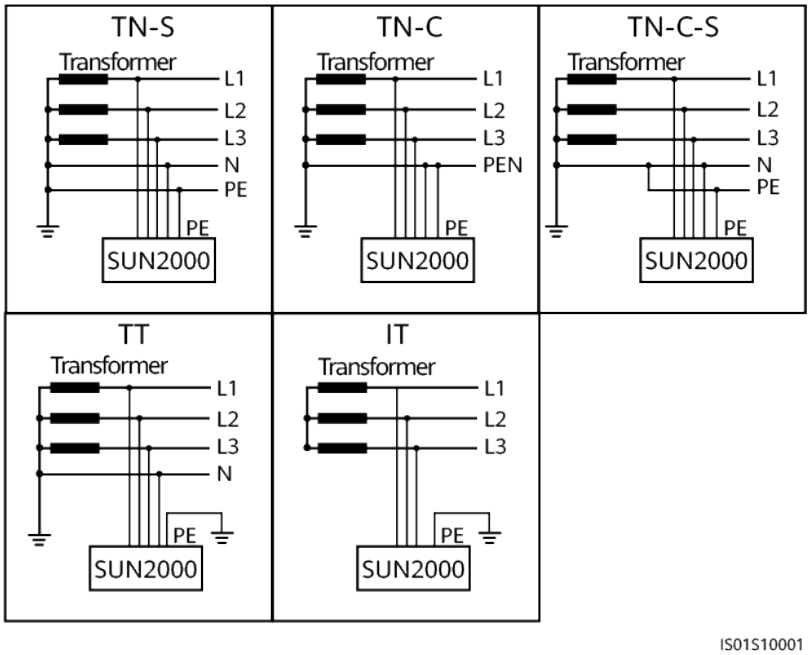

NOTE

- When the SUN2000 is used in the TT power grid, the N-to-PE voltage must be less than 30 V.
- When the SUN2000 is used in the IT power grid, set **Isolation** to **Input ungrounded, with TF**.

2.2 Appearance

Figure 2-4 Appearance

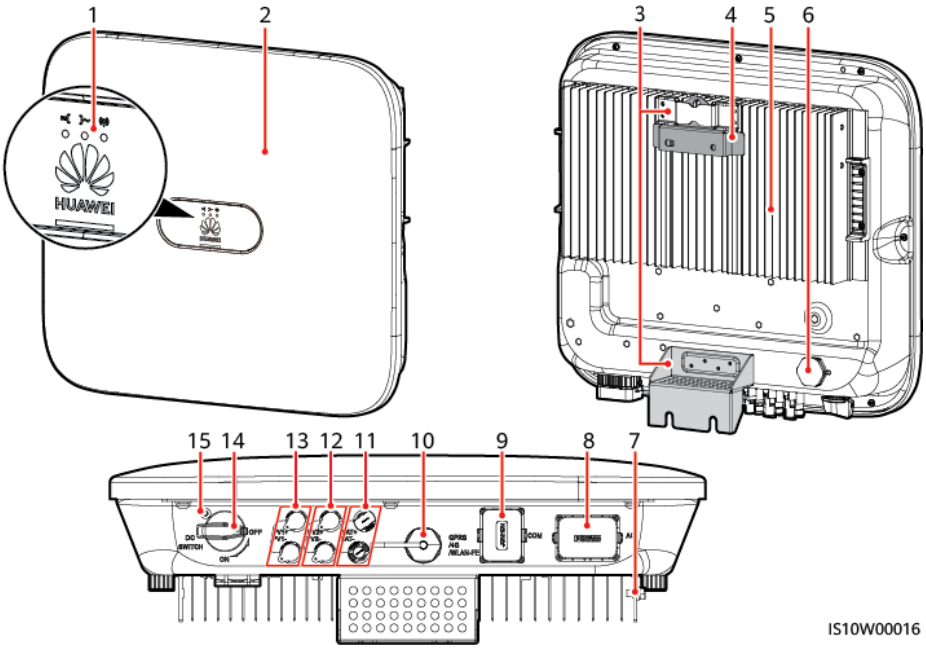

(1) LED indicator	(2) Front panel
(3) Hanging kit	(4) Mounting bracket
(5) Heat sink	(6) Ventilation valve
(7) Ground screw	(8) AC output port (AC)
(9) Communications port (COM)	(10) Smart Dongle port (GPRS/4G/WLAN-FE)
(11) Battery terminals (BAT+/BAT–)	(12) DC input terminals (PV2+/PV2–)
(13) DC input terminals (PV1+/PV1–)	(14) DC switch (DC SWITCH)
(15) Hole for the DC switch locking screw	

NOTE

Two M6 screw holes are reserved on the left and right sides of the SUN2000 for installing the awning.

Table 2-2 Indicator description

Category	Status		Description
Running indicator	**LED1**	**LED2**	-
	Steady green	Steady green	The SUN2000 is operating in grid-tied mode.

Category	Status			Description
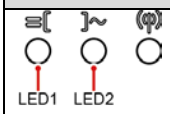	Blinking green at long intervals (on for 1s and then off for 1s)	Off		The DC is on and the AC is off.
	Blinking green at long intervals (on for 1s and then off for 1s)	Blinking green at long intervals (on for 1s and then off for 1s)		Both the DC and AC are on, and the SUN2000 is not supplying power to the power grid.
	Off	Blinking green at long intervals (on for 1s and then off for 1s)		The DC is off and the AC is on.
	Off	Off		Both the DC and AC are off.
	Blinking red at short intervals (on for 0.2s and then off for 0.2s)	-		DC environment alarm. For example, the input voltage of the PV string is high, the PV string is reversely connected, or the insulation resistance is low.
	-	Blinking red at short intervals		AC environment alarm. For example, the power grid is undervoltage, overvoltage, overfrequency, or underfrequency.
	Steady red	Steady red		Fault
Communications indicator 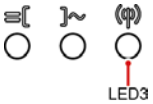	**LED3**			-
	Blinking green at short intervals (on for 0.2s and then off for 0.2s)			Communication is in progress. (When a mobile phone is connected to the SUN2000, the indicator blinks green at long intervals, indicating that the phone is connected to the SUN2000.)
	Blinking green at long intervals (on for 1s and then off for 1s)			Mobile phone access
	Off			No communication
Device replacement indicator	**LED1**	**LED2**	**LED3**	–
	Steady red	Steady red	Steady red	The SUN2000 hardware is

Category	Status			Description
				faulty and the SUN2000 needs to be replaced.

2.3 Label Description

2.3.1 Enclosure Labels

Symbol	Name	Description
	Delay discharge	Residual voltage exists after the SUN2000 is powered off. It takes 5 minutes for the SUN2000 to discharge to the safe voltage.
	Burn warning	Do not touch a running SUN2000 because it generates high temperatures on the shell.
	Electric shock warning	• High voltage exists after the SUN2000 is powered on. Only qualified and trained electrical technicians are allowed to perform operations on the SUN2000. • High touch current exists after the SUN2000 is powered on. Before powering on the SUN2000, ensure that the SUN2000 is properly grounded.
	Refer to documentation	Reminds operators to refer to the documents delivered with the SUN2000.
	Grounding label	Indicates the position for connecting the PE cable.

Symbol	Name	Description
Do not disconnect under load! 禁止带负荷断开连接!	Operation warning	Do not remove the DC input connector or AC output connector when the SUN2000 is running.
(1P)PN/ITEM:XXXXXXXX (32P)Model: SUN2000-XKTL-M0 (S)SN:XXXXXXXXXXXX MADE IN CHINA	SUN2000 serial number	Indicates the serial number.
MAC: xxxxxxxxxxxx	SUN2000 MAC address	Indicates the MAC address.
	SUN2000 WiFi login QR code	Scan the QR code to connect to the Huawei SUN2000 WiFi network.

2.3.2 Product Nameplate

Figure 2-5 Nameplate (using SUN2000-10KTL-M1 as an example)

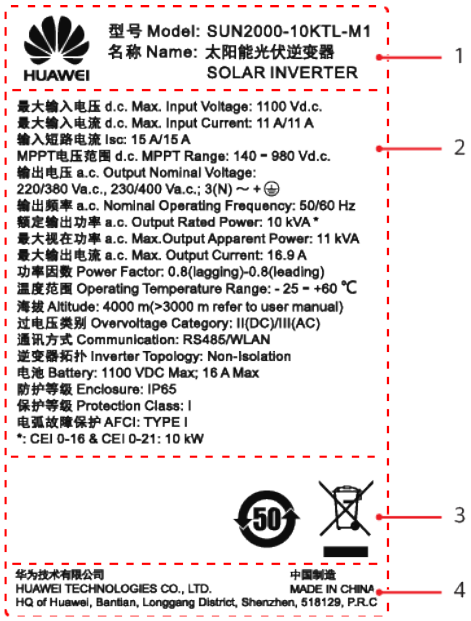

(1) Trademark and product model

(2) Key technical parameters

(3) Certification marks

(4) Company name and country of origin

NOTE

The nameplate figure is for reference only.

2.4 Working Principles

2.4.1 Circuit Diagram

Two PV strings connect to the SUN2000, and their maximum power points are tracked by two maximum power point tracking (MPPT) circuits. The SUN2000 converts DC power into three-phase AC power through an inverter circuit. Surge protection is supported on both the DC and AC sides.

Figure 2-6 SUN2000 conceptual diagram

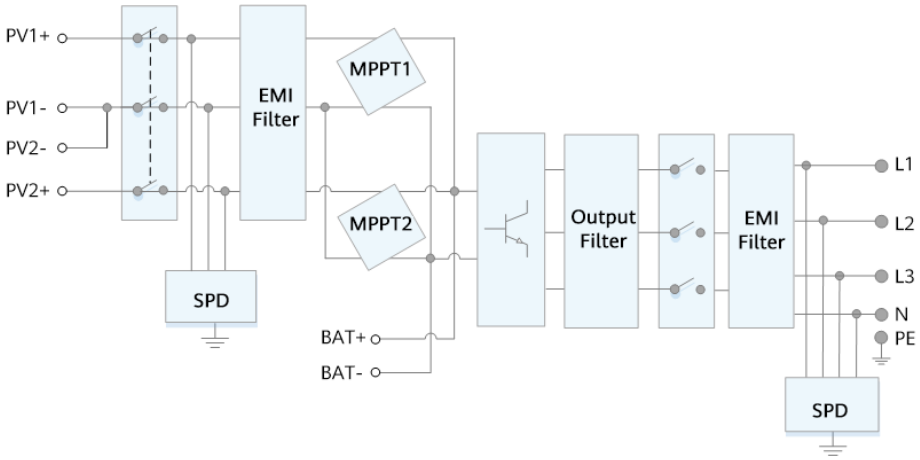

2.4.2 Working Modes

The SUN2000 can work in Standby, Operating, or Shutdown mode.

Figure 2-7 Working modes

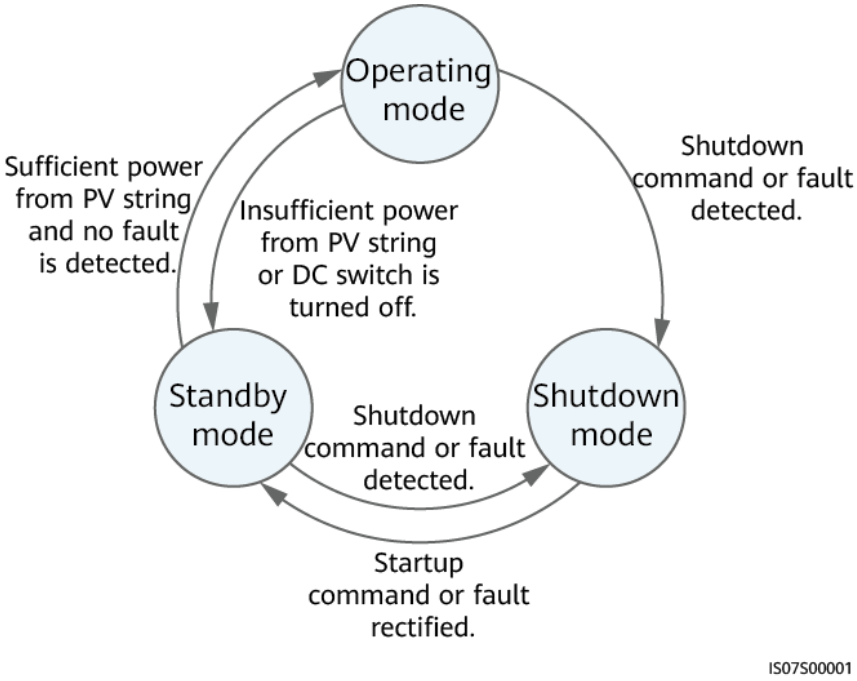

Table 2-3 Working mode description

Working Mode	Description
Standby	The SUN2000 enters Standby mode when the external environment does not meet the operating requirements. In Standby mode: • The SUN2000 continuously performs status check and enters the Operating mode once the operating requirements are met. • The SUN2000 enters Shutdown mode after detecting a shutdown command or a fault after startup.
Operating	In Operating mode: • The SUN2000 converts DC power from PV strings into AC power and feeds the power to the power grid. • The SUN2000 tracks the maximum power point to maximize the PV string output. • If the SUN2000 detects a fault or a shutdown command, it enters the Shutdown mode. • The SUN2000 enters Standby mode after detecting that the PV string output power is not suitable for connecting to the power grid for generating power.
Shutdown	• In Standby or Operating mode, the SUN2000 enters Shutdown mode after detecting a fault or shutdown command. • In Shutdown mode, the SUN2000 enters Standby mode after detecting a startup command or that the fault is rectified.

 Copyright © Huawei Technologies Co., Ltd.

3 Storage

The following requirements should be met if the SUN2000 is not put into use directly:

- Do not unpack the SUN2000.
- Keep the storage temperature at –40°C to +70°C and the humidity at 5%–95% RH.
- The SUN2000 should be stored in a clean and dry place and be protected from dust and water vapor corrosion.
- A maximum of eight SUN2000s can be stacked. To avoid personal injury or device damage, stack SUN2000s with caution to prevent them from falling over.
- Periodic inspections are required during the storage. Replace the packing materials if necessary.
- If the SUN2000 has been long-term stored, inspections and tests should be conducted by qualified personnel before it is put into use.

 Copyright © Huawei Technologies Co., Ltd.

4 Installation

4.1 Checking Before Installation

Outer Packing Materials

Before unpacking the inverter, check the outer packing materials for damage, such as holes and cracks, and check the inverter model. If any damage is found or the inverter model is not what you requested, do not unpack the package and contact your supplier as soon as possible.

NOTE

You are advised to remove the packing materials within 24 hours before installing the inverter.

Package Contents

After unpacking the inverter, check that the contents are intact and complete. If any damage is found or any component is missing, contact your supplier.

NOTE

For details about the number of contents, see the *Packing List* in the packing case.

4.2 Tools

Type	Tool			
Installation Tools	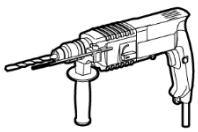 Hammer drill Drill bit: Φ8 mm and Φ6 mm	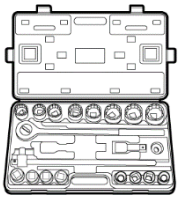 Socket wrench set	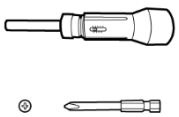 Torque screwdriver Phillips head: M3	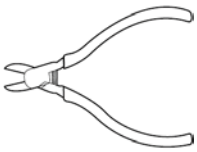 Diagonal pliers

Type	Tool			
	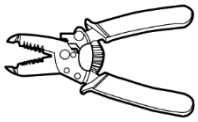 Wire stripper	Removal wrench Model: PV-MS-HZ Open-end Wrench; manufacturer: Staubli	Rubber mallet	Utility knife
	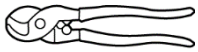 Cable cutter	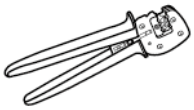 Crimping tool Model: PV-CZM-22100; manufacturer: Staubli	Multimeter DC voltage measurement range ≥ 1100 V DC	Vacuum cleaner
	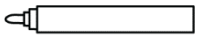 Marker	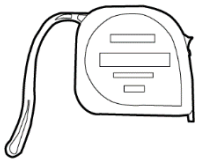 Measuring tape	Bubble or digital level	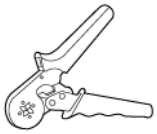 Cord end terminal crimper
	Heat shrink tubing	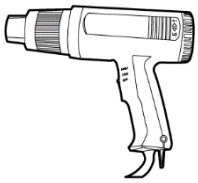 Heat gun	Cable tie	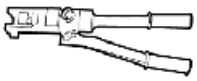 Hydraulic pliers
PPE	Safety gloves	Safety goggles	Anti-dust respirator	Safety shoes

4.3 Determining the Installation Position

4.3.1 Environment Requirements

Basic Requirements

- The SUN2000 is protected to IP65 and can be installed indoors or outdoors.
- Do not install the SUN2000 in a place where personnel are easy to come into contact with its enclosure and heat sinks, because these parts are extremely hot during operation.
- Do not install the SUN2000 in areas with flammable or explosive materials.
- Do not install the SUN2000 at a place within children's reach.
- Do not install the SUN2000 outdoors in salt areas because it will be corroded there and may cause fire. A salt area refers to the region within 500 meters from the coast or prone to sea breeze. The regions prone to sea breeze vary depending on weather conditions (such as typhoons and monsoons) or terrains (such as dams and hills).
- The SUN2000 must be installed in a well-ventilated environment to ensure good heat dissipation.
- Recommended: Install the SUN2000 in a sheltered place or a place with an awning.

Mounting Structure Requirements

- The mounting structure where the SUN2000 is installed must be fireproof.
- Do not install the SUN2000 on flammable building materials.
- The SUN2000 is heavy. Ensure that the installation surface is solid enough to bear the weight load.
- In residential areas, do not install the SUN2000 on drywalls or walls made of similar materials which have a weak sound insulation performance because the noise generated by the SUN2000 is noticeable.

4.3.2 Space Requirements

Installation Angle Requirements

The SUN2000 can be wall-mounted or pole-mounted. The installation angle requirements are as follows:

- Install the SUN2000 vertically or at a maximum back tilt of 15 degrees to facilitate heat dissipation.
- Do not install the SUN2000 at forward tilted, excessive back tilted, side tilted, horizontal, or upside down positions.

 Copyright © Huawei Technologies Co., Ltd.

Figure 4-1 Installation tilts

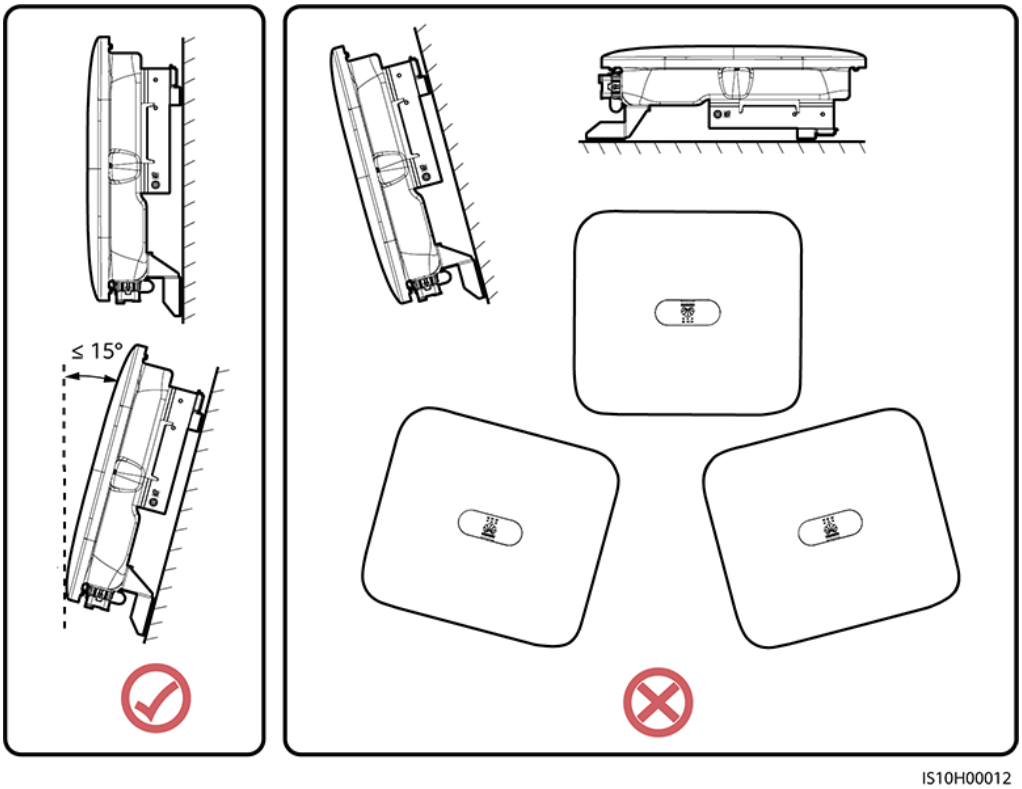

Installation Space Requirements

- Reserve enough space around the SUN2000 to ensure sufficient space for installation and heat dissipation.

Figure 4-2 Installation space

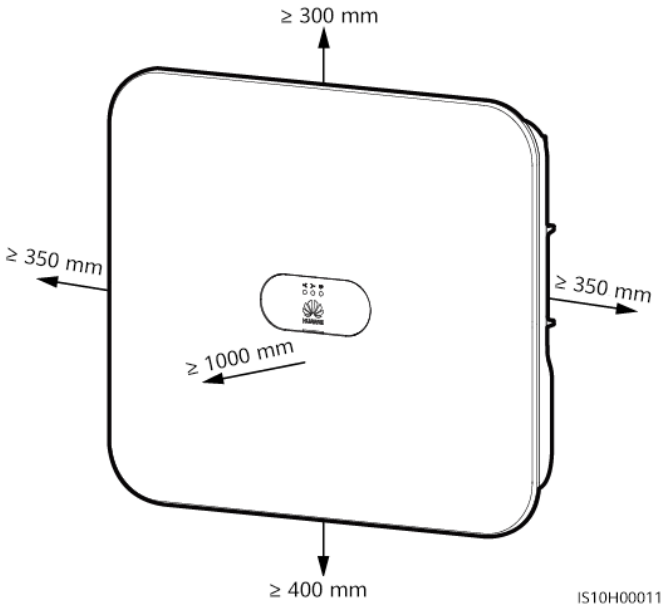

- When installing multiple SUN2000s, install them in horizontal mode if sufficient space is available and install them in triangle mode if no sufficient space is available. Stacked installation is not recommended.

Figure 4-3 Horizontal installation (recommended)

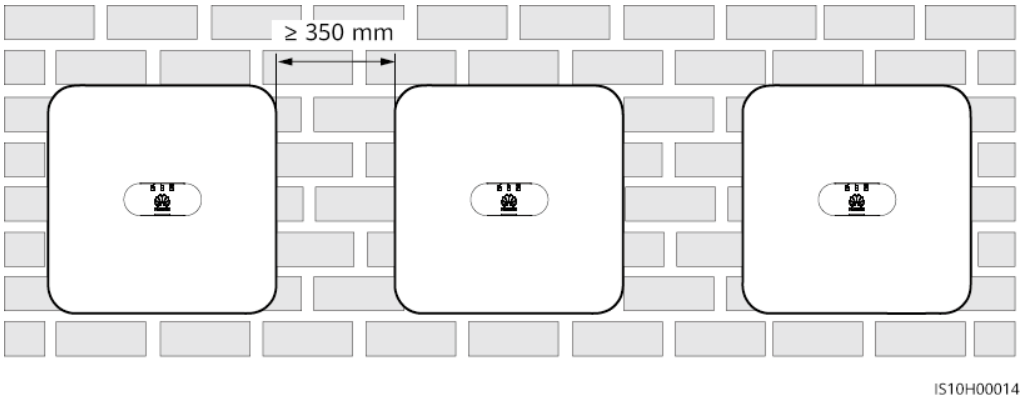

Figure 4-4 Staggered installation (recommended)

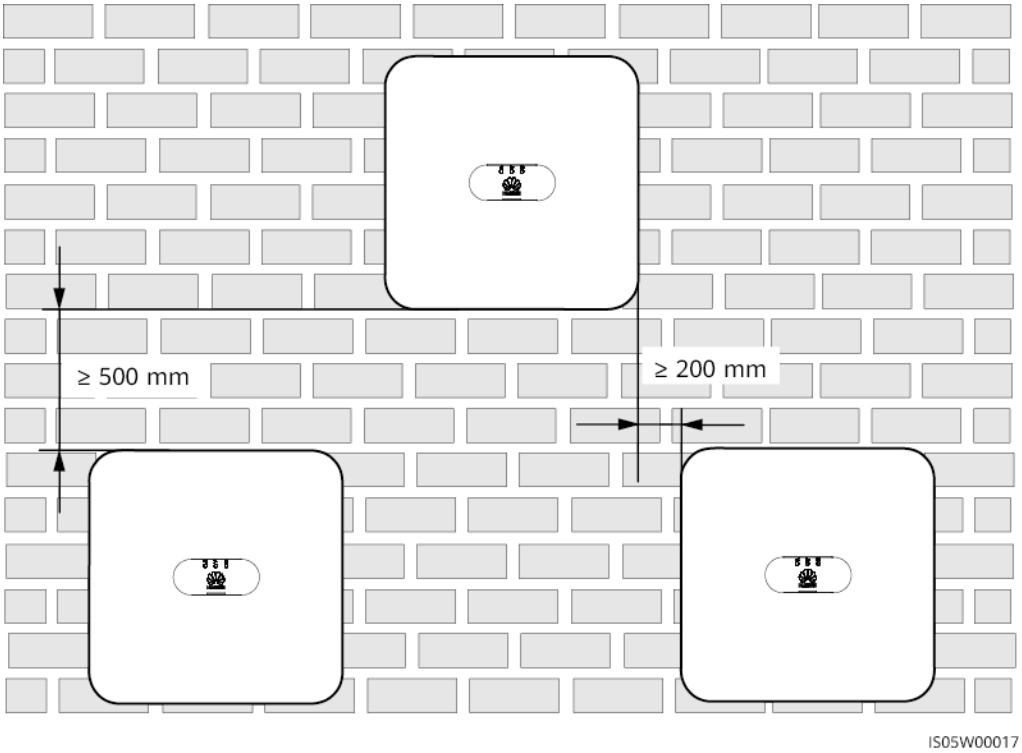

Figure 4-5 Stacked installation (not recommended)

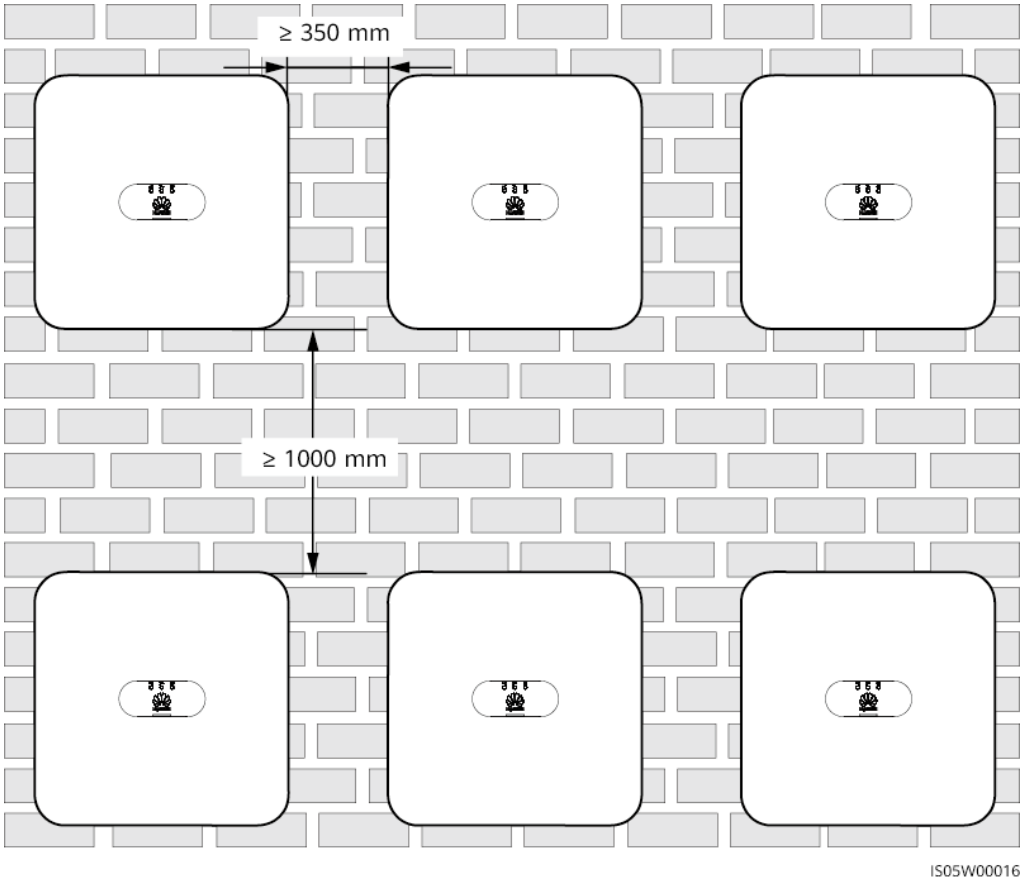

4.4 Moving the SUN2000

Procedure

Step 1 Two persons are required to move the SUN2000 with one person on both sides. Lift the SUN2000 from the packing case and move it to the specified installation position.

CAUTION

- Move the SUN2000 with care to prevent device damage and personal injury.
- Do not use the wiring terminals and ports at the bottom to support any weight of the SUN2000.
- Place a foam pad or cardboard under the SUN2000 to protect the SUN2000 enclosure from damage.

Figure 4-6 Moving the SUN2000

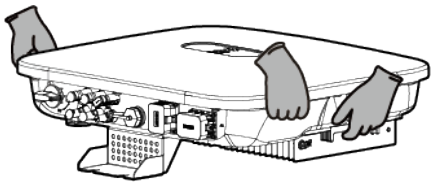

----End

4.5 Installing the Mounting Bracket

Installation Precautions

Figure 4-7 shows the dimensions of installation holes on the SUN2000.

Figure 4-7 Mounting bracket dimensions

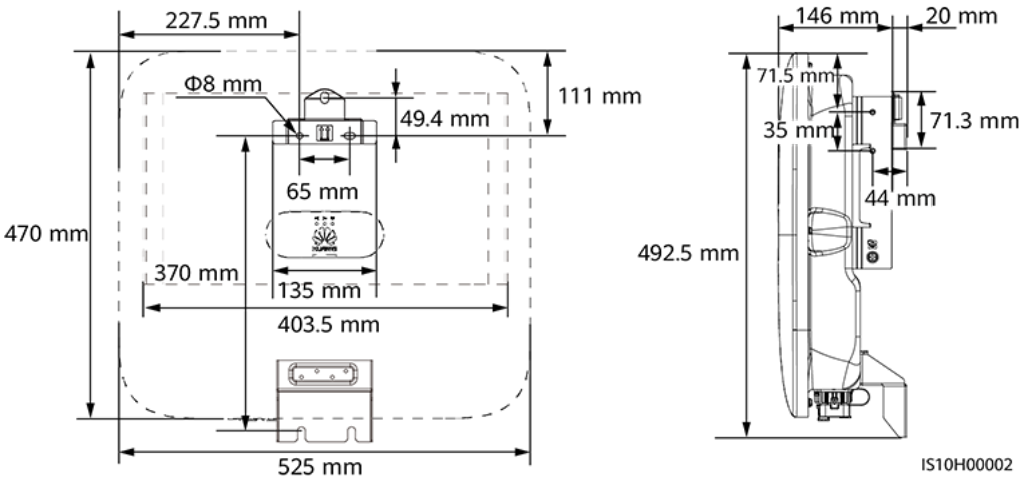

NOTE

Two M6 screw holes are reserved on both left and right sides of the enclosure for installing an awning.

4.5.1 Wall-mounted Installation

Procedure

Step 1 Determine the positions for drilling holes and mark the positions using a marker.

Step 2 Secure the mounting bracket.

NOTE

M6x60 expansion bolts are delivered with the SUN2000. If the length and number of the bolts do not meet installation requirements, prepare M6 stainless steel expansion bolts by yourself.

Figure 4-8 Expansion bolt composition

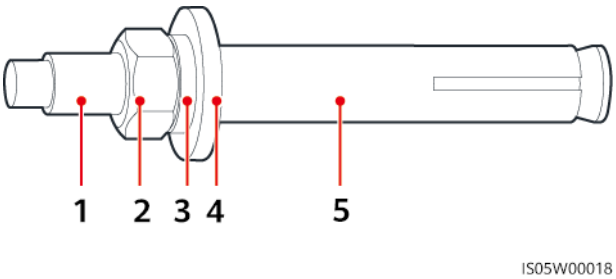

(1) Bolt (2) Nut (3) Spring washer

(4) Flat washer (5) Expansion sleeve

DANGER

Avoid drilling holes in the water pipes and cables buried in the wall.

NOTICE

- To prevent dust inhalation or contact with eyes, wear safety goggles and an anti-dust mask when drilling holes.
- Clean up any dust in and around the holes using a vacuum cleaner and measure the distance between holes. If the holes are inaccurately positioned, drill holes again.
- Level the top of the expansion sleeve with the concrete wall after removing the bolt, spring washer, and flat washer. Otherwise, the mounting bracket will not be securely installed on the concrete wall.
- Loosen the nuts, flat washers, and spring washers of the two expansion bolts below.

Figure 4-9 Installing the mounting bracket

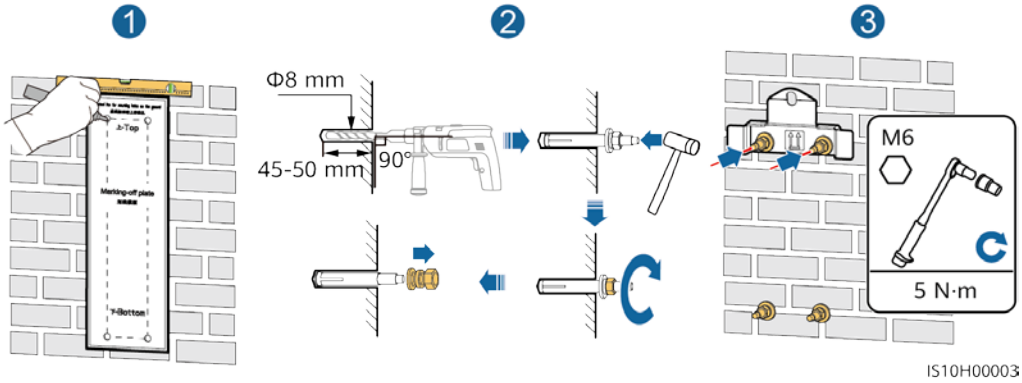

Step 3 (Optional) Install the locking screw for the DC switch.

NOTE

- The locking screw for the DC switch is delivered with the SUN2000. According to the Australian standard, the locking screw is used to secure the DC switch to prevent the SUN2000 from being started by mistake.
- For the model used in Australia, perform this step based on the local standards.

Figure 4-10 Installing the locking screw for the DC switch

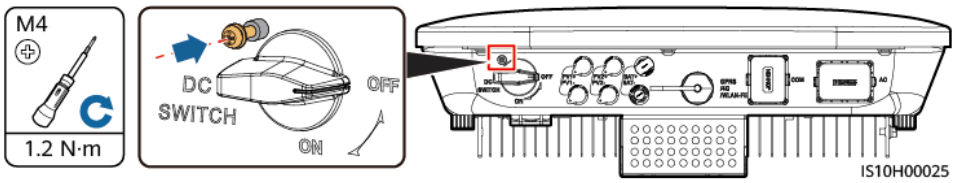

Step 4 Install the SUN2000 onto the mounting bracket.

Step 5 Tighten the nut.

Figure 4-11 Installing a SUN2000

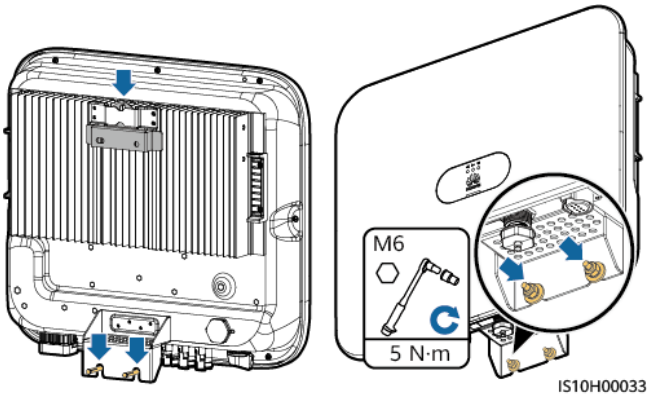

Step 6 (Optional) Install an anti-theft lock.

NOTICE

- Prepare an anti-theft lock suitable for the lock hole diameter (Φ8 mm) by yourself. Ensure that the lock can be installed successfully.
- Outdoor waterproof lock is recommended.
- Keep the key to the anti-theft lock properly.

Figure 4-12 Installing an anti-theft lock

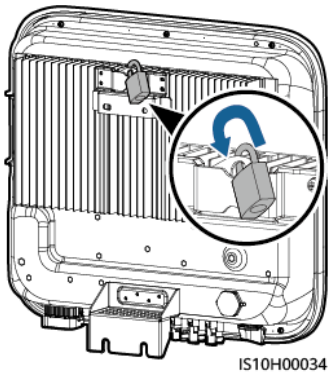

----End

4.5.2 Support-mounted Installation

Prerequisites

Prepare M6 stainless bolt assemblies (including flat washers, spring washers, and M6 bolts) with appropriate lengths as well as matched flat washers and nuts based on the support specifications.

Procedure

Step 1 Determine the hole positions based on the marking-off template, and then mark the hole positions using a marker.

Figure 4-13 Determining the positions for drilling holes

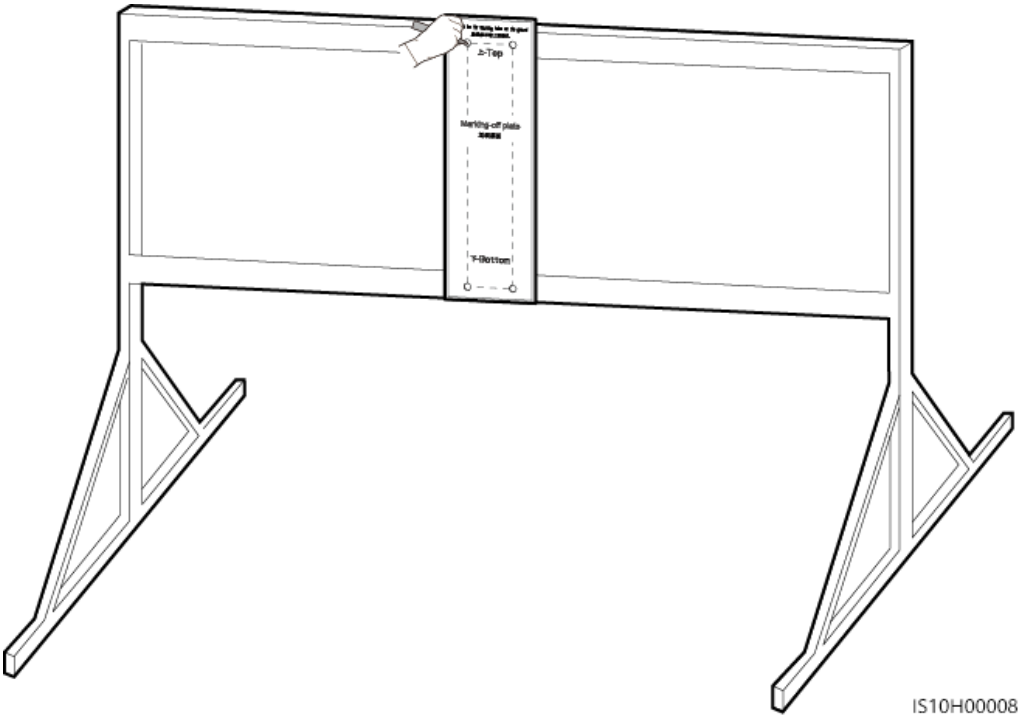

Step 2 Drill holes using a hammer drill.

NOTE

You are advised to apply anti-rust paint on the hole positions for protection.

Figure 4-14 Drilling holes

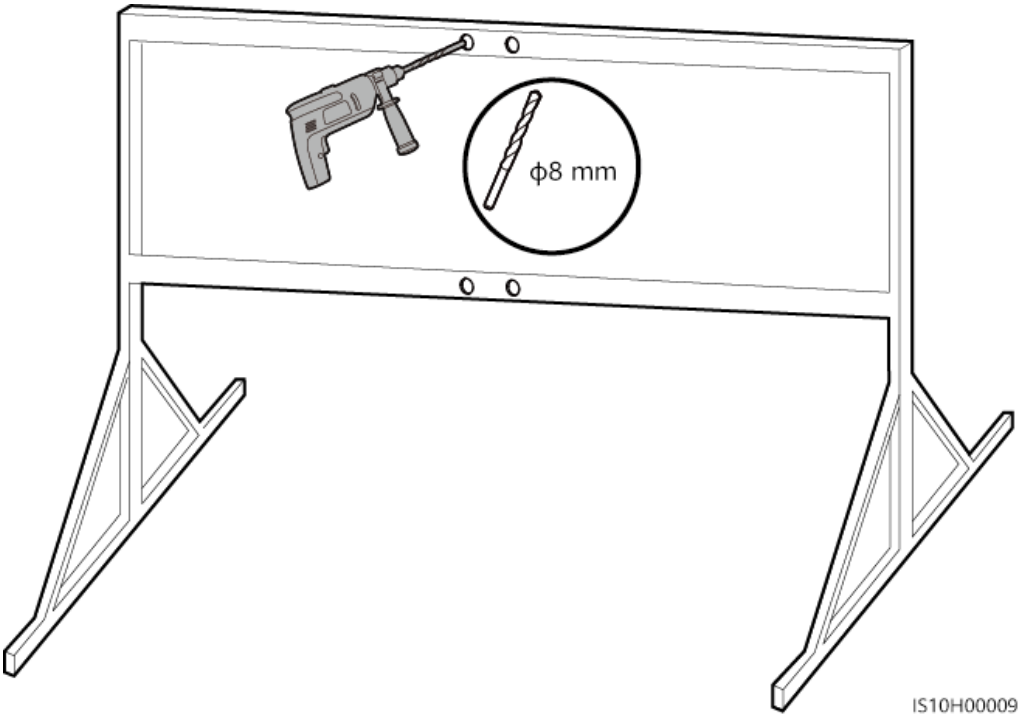

Step 3 Secure the mounting bracket.

Figure 4-15 Securing the mounting bracket

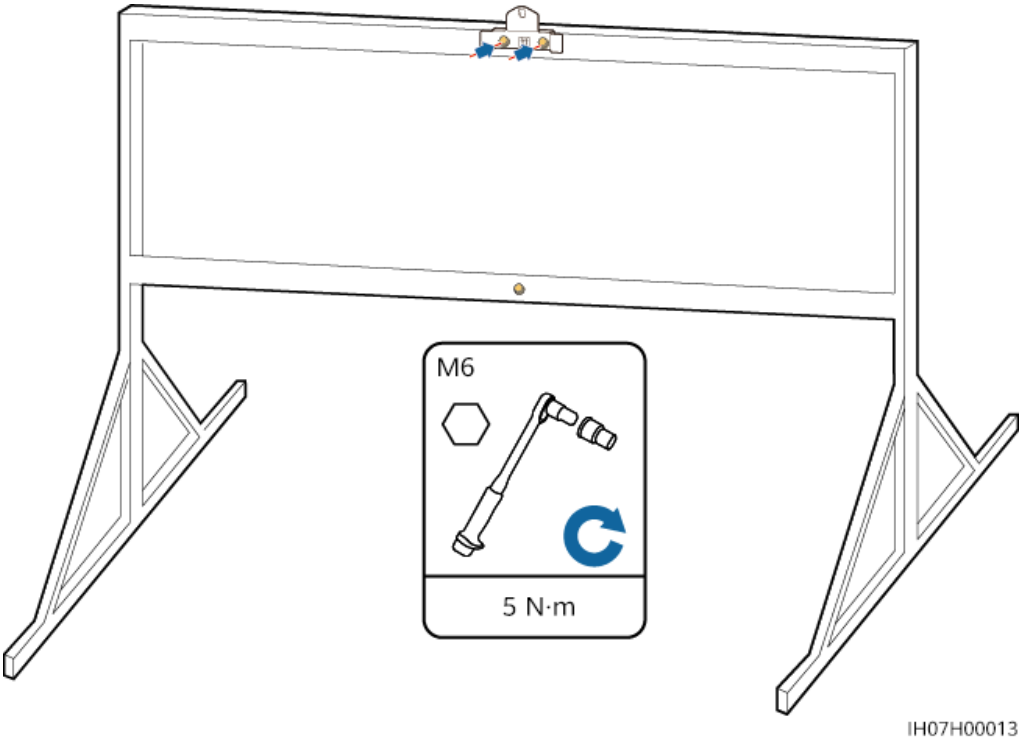

Step 4 (Optional) Install the locking screw for the DC switch.

NOTE

- The locking screw for the DC switch is delivered with the SUN2000. According to the Australian standard, the locking screw is used to secure the DC switch to prevent the SUN2000 from being started by mistake.
- For the model used in Australia, perform this step based on the local standards.

Figure 4-16 Installing the locking screw for the DC switch

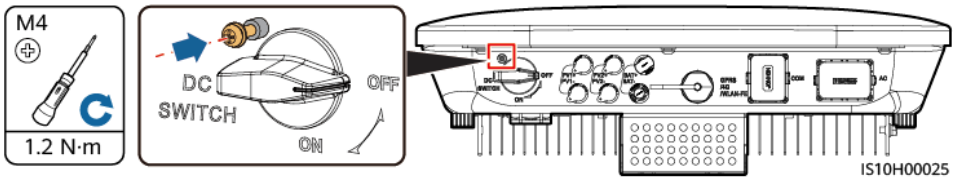

Step 5 Install the SUN2000 onto the mounting bracket.

Step 6 Tighten bolt assemblies.

Figure 4-17 Installing a SUN2000

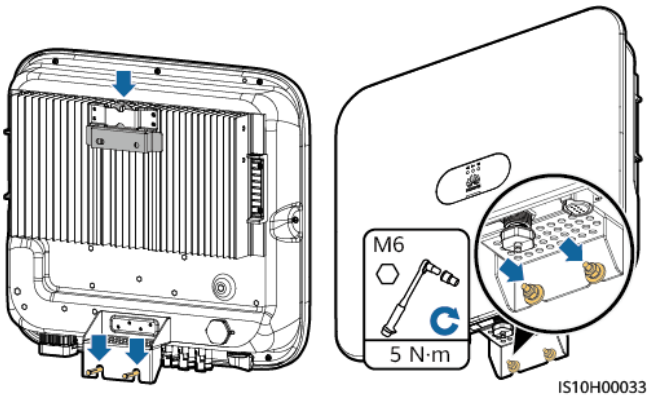

Step 7 (Optional) Install an anti-theft lock.

NOTICE

- Prepare an anti-theft lock suitable for the lock hole diameter (Φ8 mm) by yourself. Ensure that the lock can be installed successfully.
- Outdoor waterproof lock is recommended.
- Keep the key to the anti-theft lock properly.

Figure 4-18 Installing an anti-theft lock

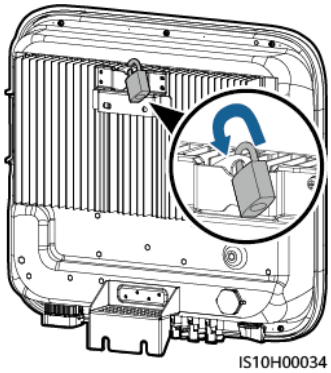

----End

5 Electrical Connections

5.1 Installation Preparation

Figure 5-1 SUN2000 cable connections (dashed boxes indicate optional components)

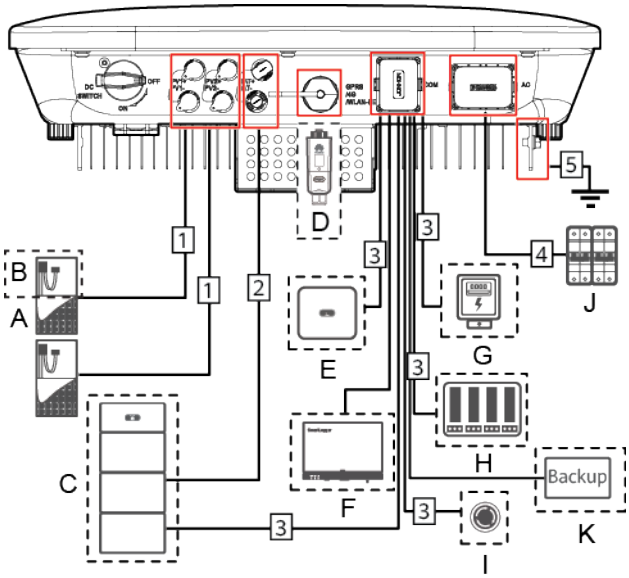

NOTICE

If a Smart Dongle is configured, it is recommended that you install it before connecting the signal cable.

Table 5-1 Component description

No.	Component	Description	Source
A	PV module	• A PV string is composed of the PV modules connected in series and can work with an optimizer. • The SUN2000 supports the	Prepared by users

No.	Component	Description	Source
		input from two PV strings.	
B	(Optional) Smart PV optimizer	The SUN2000-450W-P smart PV optimizer is supported.	Purchased from Huawei
C	(Optional) Battery	The LUNA2000-5-S0, LUNA2000-10-S0, and LUNA2000-15-S0 batteries can be connected to the SUN2000.	Purchased from Huawei
D	(Optional) Smart Dongle[1]	Supported models: • WLAN-FE Smart Dongle: SDongleA-05 • 4G Smart Dongle: SDongleA-03	Purchased from Huawei
E	(Optional) SUN2000	Select a proper model as required.	Purchased from Huawei
F	(Optional) SmartLogger	Select a proper model as required.	Purchased from Huawei
G	(Optional) Power meter	The DTSU666-H power meter is recommended.	Purchased from Huawei
H	(Optional) Power grid scheduling device	Select the devices that meet the power grid scheduling requirements.	Provided by the local power grid company
I	(Optional) Rapid shutdown switch	Select a proper model as required.	Prepared by users
J	AC switch	Recommended: a three-phase AC circuit breaker with a rated voltage greater than or equal to 380 V AC and a rated current of: • 16 A (SUN2000-3KTL-M1, SUN2000-4KTL-M1, SUN2000-5KTL-M1, and SUN2000-6KTL-M1) • 25 A (SUN2000-8KTL-M1 and SUN2000-10KTL-M1)	Prepared by users
K	(Optional) Smart Backup Box	Select a proper model as required.	Purchased from Huawei

Note 1:

- For details about how to operate the WLAN-FE Smart Dongle SDongleA-05, see *SDongleA-05 Quick Guide (WLAN-FE)*.
- For details about how to operate the 4G Smart Dongle SDongleA-03, see *SDongleA-03 Quick Guide (4G)*.

 Copyright © Huawei Technologies Co., Ltd.

No.	Component	Description	Source
You can obtain the quick guide at https://support.huawei.com/enterprise/en/index.html by searching for the Smart Dongle model.			

Table 5-2 Cable description

No.	Name	Type	Recommended Specifications
1	DC input power cable	Common outdoor PV cable in the industry (Recommended model: PV1-F)	• Conductor cross-sectional area: 4–6 mm^2 • Cable outer diameter: 5.5–9 mm
2	(Optional) Battery cable		
3	(Optional) Signal cable[a]	Outdoor shielded twisted pair	• Conductor cross-sectional area: 0.2–1 mm^2 • Cable outer diameter: 4–11 mm
4	AC output power cable[b]	Outdoor copper cable	• Conductor cross-sectional area: 4–6 mm^2 • Cable outer diameter: 10–21 mm
5	PE cable	Single-core outdoor copper-core cable	Conductor cross-sectional area: ≥ 4 mm^2
Note a: When the smart power sensor and battery are connected to the SUN2000 at the same time, use a cable core with a cross-sectional area of 0.2 mm^2 to 0.5 mm^2. Note b: The minimum cable diameter depends on the fuse rating on the AC side.			

NOTE

- The minimum cable diameter should comply with the local cable standard.
- Factors influencing cable selection are as follows: rated current, type of cable, routing method, ambient temperature, and maximum desired line losses.

5.2 Connecting the PE cable

Important Notes

DANGER

- Ensure that the PE cable is securely connected. Otherwise, electric shocks may occur.
- Do not connect the N wire to the enclosure as a PE cable. Otherwise, electric shocks may occur.

NOTE

- The PE point at the AC output port is used only as a PE equipotential point, not a substitute for the PE point on the enclosure.
- It is recommended that silica gel or paint be applied around the ground terminal after the PE cable is connected.

Supplementary Notes

The SUN2000 has the grounding detection function. This function is used to check whether the SUN2000 is properly grounded before the SUN2000 starts, or check whether the SUN2000 ground cable is disconnected when the SUN2000 is running. This function is used to check whether the SUN2000 is properly grounded under limited conditions. To ensure the safe operation of the SUN2000, properly ground the SUN2000 according to the connection requirements of the ground cable. For some power grid types, if the output side of the SUN2000 is connected to an isolation transformer, ensure that the SUN2000 is properly grounded and set **Isolation** to **Input ungrounded, with TF** to enable the SUN2000 to run properly.

- According to IEC 62109, to ensure the safe operation of the SUN2000 in the case of ground cable damage or disconnection, properly connect the ground cable of the SUN2000 and ensure that it meets at least one of the following requirements before the grounding detection function becomes invalid.
  - The ground cable is a single-core outdoor copper cable with a conductor cross-sectional area greater than or equal to 10 mm^2.
  - Use cables with the same diameter as the AC output power cable and ground the PE terminal on the AC connector and the ground screw on the chassis.
- In some countries and regions, the SUN2000 must have additional ground cables. Use cables with the same diameter as the AC output power cable and ground the PE terminal on the AC connector and the ground screw on the chassis.

Procedure

Step 1 Crimp OT terminals.

 Copyright © Huawei Technologies Co., Ltd.

NOTICE

- Avoid scratching the core wire when stripping a cable.
- The cavity formed after the conductor crimp strip of the OT terminal is crimped must wrap the core wires completely. The core wires must contact the OT terminal closely.
- Wrap the wire crimping area with heat shrink tubing or PVC insulation tape. The heat shrink tubing is used as an example.
- When using a heat gun, protect devices from being scorched.

Figure 5-2 Crimping an OT terminal

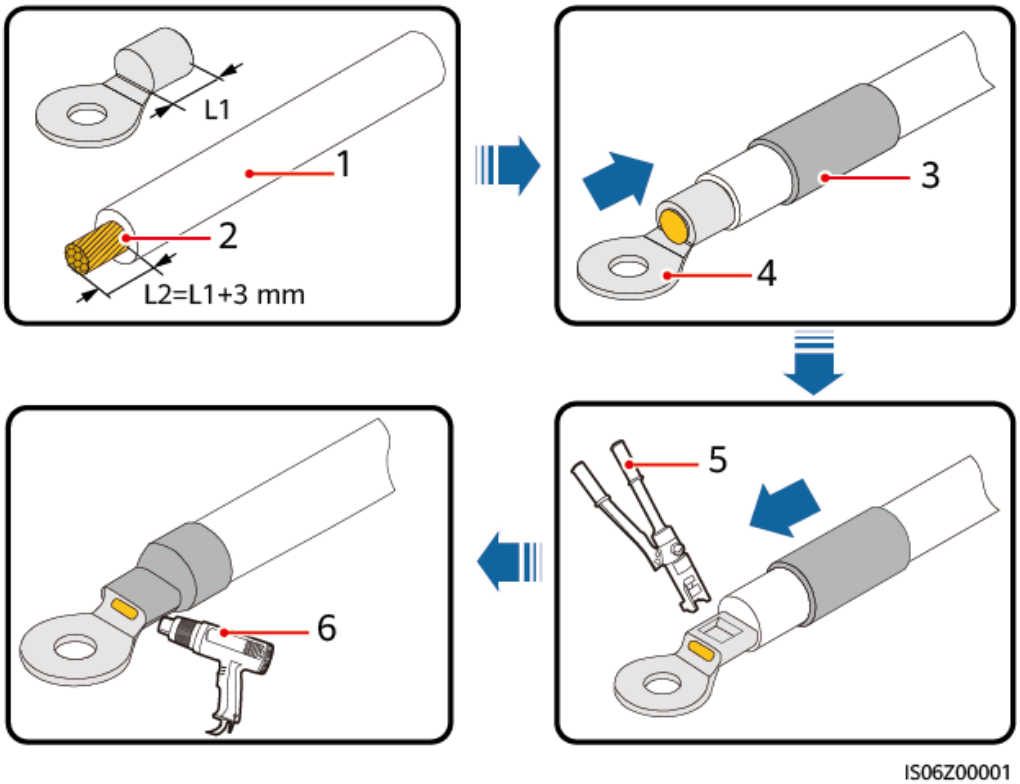

(1) Cable	(2) Core	(3) Heat shrink tubing
(4) OT terminal	(5) Crimping tool	(6) Heat gun

Step 2 Connect the PE cable.

Figure 5-3 Connecting the PE cable

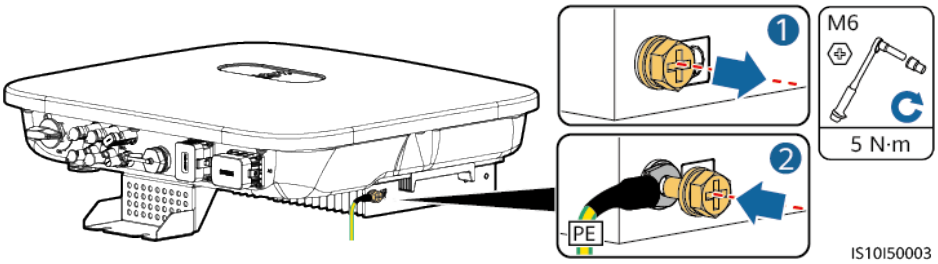

----End

5.3 Connecting the AC Output Power Cable

Precautions

A three-phase AC switch needs to be installed on the AC side of the SUN2000. To ensure that the SUN2000 can safely disconnect itself from the power grid when an exception occurs, select a proper overcurrent protection device in compliance with local power distribution regulations.

WARNING

Do not connect loads between the SUN2000 and the AC switch directly connected to it.

The SUN2000 is integrated with a comprehensive residual current monitoring unit. Once detecting that the residual current exceeds the threshold, the SUN2000 immediately disconnects itself from the power grid.

NOTICE

- If the external AC switch can perform earth leakage protection, the rated leakage action current should be greater than or equal to 100 mA.
- If multiple SUN2000s connect to the general residual current device (RCD) through their respective external AC switches, the rated leakage action current of the general RCD should be greater than or equal to the number of SUN2000s multiplied by 100 mA.
- A knife switch cannot be used as an AC switch.

Procedure

Step 1 Connect the AC output power cable to the AC connector.

Figure 5-4 Stripping requirements

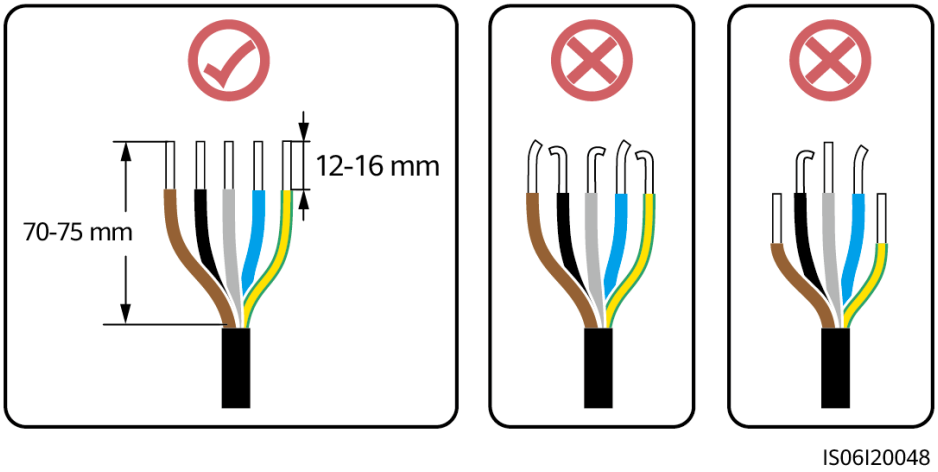

NOTICE

- Ensure that the cable jacket is inside the connector.
- Ensure that the exposed core wire is totally inserted into the cable hole.
- Ensure that AC terminations provide firm and solid electrical connections. Failing to do so may cause SUN2000 malfunction and damage to its AC connectors.
- Ensure that the cable is not twisted.

Figure 5-5 Three-core cable (L1, L2, and L3)

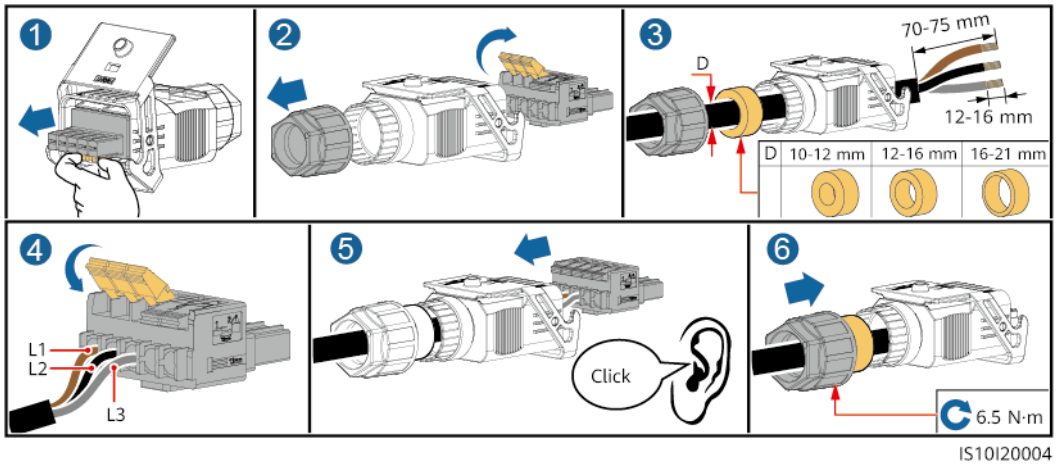

Figure 5-6 Four-core cable (L1, L2, L3, and PE)

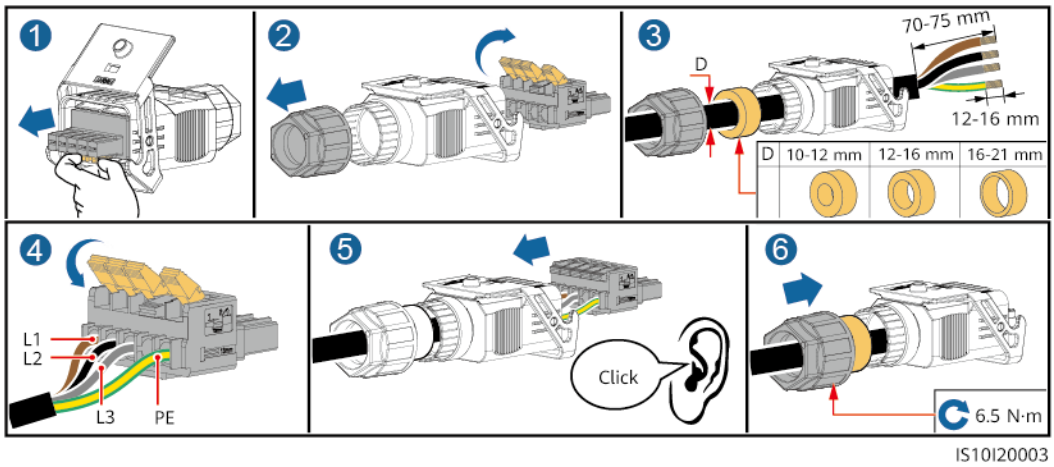

Figure 5-7 Four-core cable (L1, L2, L3, and N)

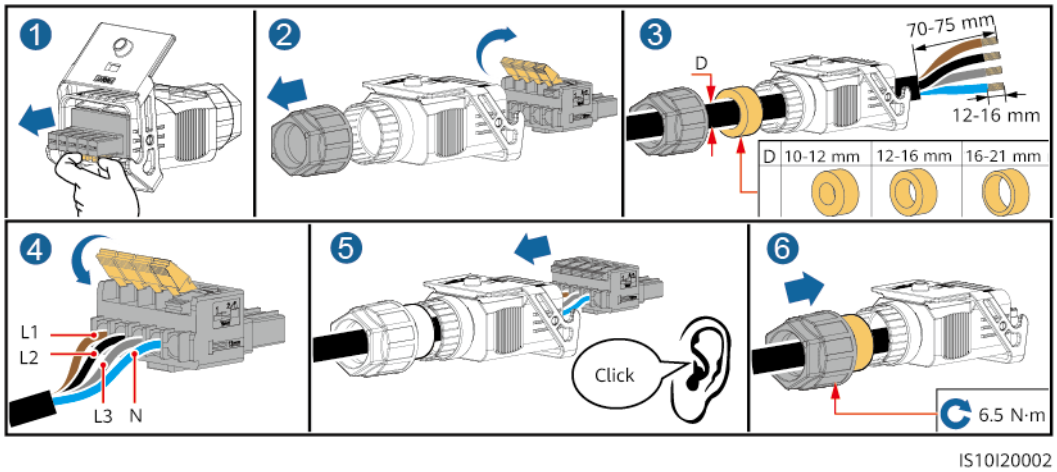

Figure 5-8 Five-core cable (L1, L2, L3, N, and PE)

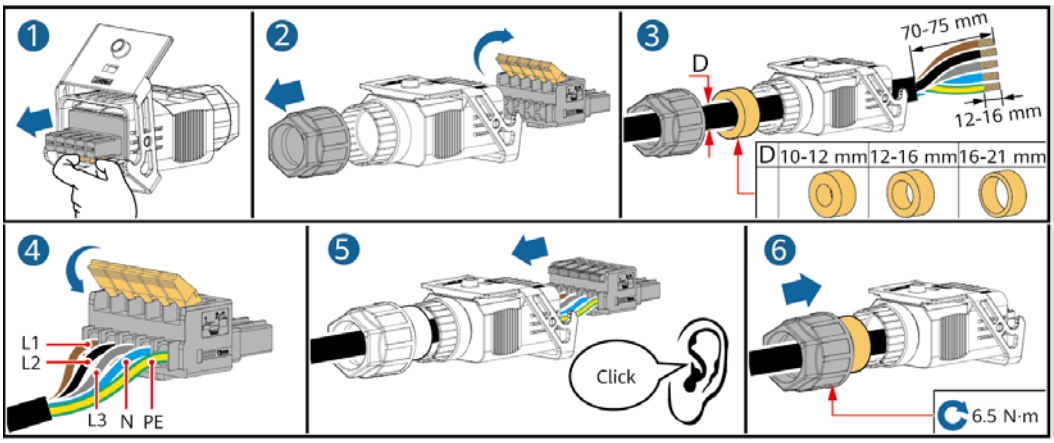

NOTE

The cable colors shown in the figures are for reference only. Select an appropriate cable according to local standards.

Step 2 Connect the AC connector to the AC output port.

NOTICE

Ensure that the AC connector is connected securely.

Figure 5-9 Securing the AC connector

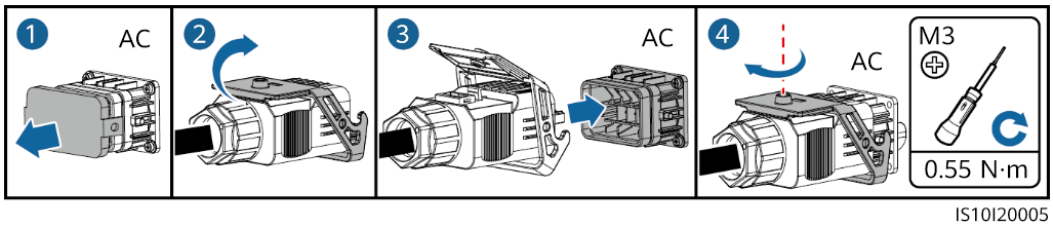

Step 3 Check the route of the AC output power cable.

Figure 5-10 Cable route

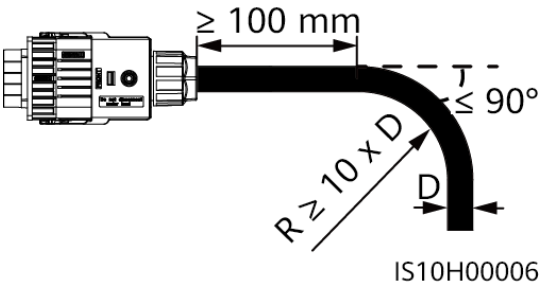

----End

Disconnection

Disconnection can be performed in reverse order.

5.4 Installing DC input power cables

Important Notes

DANGER

- Before connecting the DC input power cable, ensure that the DC voltage is within the safe range (lower than 60 V DC) and that the DC switch on the SUN2000 is OFF. Otherwise, electric shocks may occur.
- When the SUN2000 is operating, it is not allowed to work on the DC input power cables, such as connecting or disconnecting a PV string or a PV module in a PV string. Otherwise, electric shocks may occur.
- If no PV string connects to a DC input terminal of the SUN2000, do not remove the watertight cap from the DC input terminals. Otherwise, the IP rating of the SUN2000 will be affected.

WARNING

Ensure that the following conditions are met. Otherwise, the SUN2000 may be damaged, or even fire could happen.

- PV modules connected in series in each PV string are of the same specifications.
- The open-circuit voltage of each PV string must always be 1100 V DC or lower.
- The maximum short-circuit current of each PV string must always be 15 A or lower.
- The polarities of electric connections are correct on the DC input side. The positive and negative terminals of a PV string connect to corresponding positive and negative DC input terminals of the SUN2000.
- If polarity of the DC input power cable is reversed, do not turn off the DC switch immediately or remove positive and negative connectors. Wait until the solar irradiance declines at night and the PV string current reduces to below 0.5 A, and then turn off the DC switch and remove the positive and negative connectors. Correct the PV string polarity before reconnecting the PV string to the SUN2000.

NOTICE

- Since the output of the PV string connected to the SUN2000 cannot be grounded, ensure that the PV module output is well insulated to ground.
- During the installation of PV strings and the SUN2000, the positive or negative terminals of PV strings may be short-circuited to ground if the power cable is not properly installed or routed. In this case, an AC or DC short circuit may occur and damage the SUN2000. The caused device damage is not covered under any warranty.

Terminal Description

Figure 5-11 Terminal

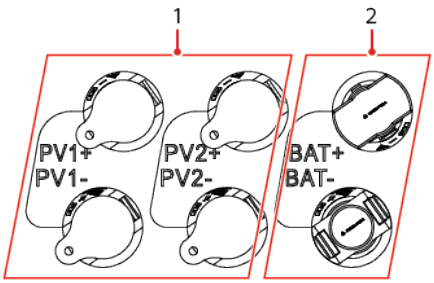

(1) DC input terminal (2) Battery terminal

Figure 5-12 Correct wiring terminals

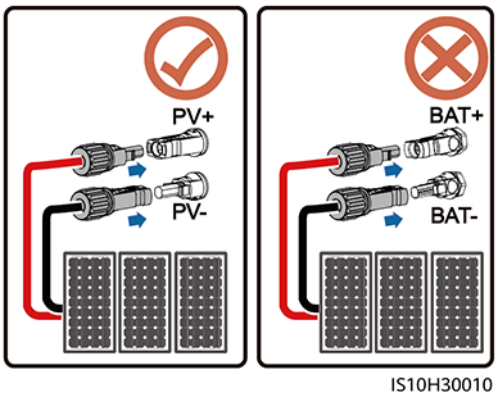

Procedure

Step 1 Install the DC input power cables.

WARNING

Before inserting the positive and negative connectors into the positive and negative DC input terminals of the SUN2000, ensure that the DC switch is set to OFF.

CAUTION

Use the positive and negative Staubli MC4 metal terminals and DC connectors supplied with the SUN2000. Using incompatible positive and negative metal terminals and DC connectors may result in serious consequences. The caused device damage is not covered under warranty.

 Copyright © Huawei Technologies Co., Ltd.

NOTICE

- Cables with high rigidity, such as armored cables, are not recommended as DC input power cables, because poor contact may be caused by the bending of the cables.
- Before assembling DC connectors, label the cable polarities correctly to ensure correct cable connections.
- After crimping the positive and negative metal terminals, pull back the DC input power cables to ensure that they are securely connected.
- Insert the crimped metal terminals of the positive and negative power cables into the appropriate positive and negative connectors. Then pull back the DC input power cables to ensure that they are connected securely.
- If a DC input power cable is reversely connected and the DC switch is turned on, do not operate on the DC switch or the positive/negative connectors immediately. Otherwise, the device may be damaged. The caused device damage is not covered under any warranty. Wait until the solar irradiance declines at night and the PV string current reduces to below 0.5 A, and then turn off the DC switch and remove the positive and negative connectors. Correct the PV string polarity before reconnecting the PV string to the SUN2000.

NOTE

- The DC voltage measurement range of the multimeter must be at least 1100 V.
- If the voltage is a negative value, the DC input polarity is incorrect. Correct the polarity.
- If the voltage is greater than 1100 V DC, too many PV modules configured to the same string. Remove some PV modules.
- If the PV string is configured with an optimizer, check the cable polarity by referring to the smart PV optimizer quick guide.

Figure 5-13 Installing DC input power cables

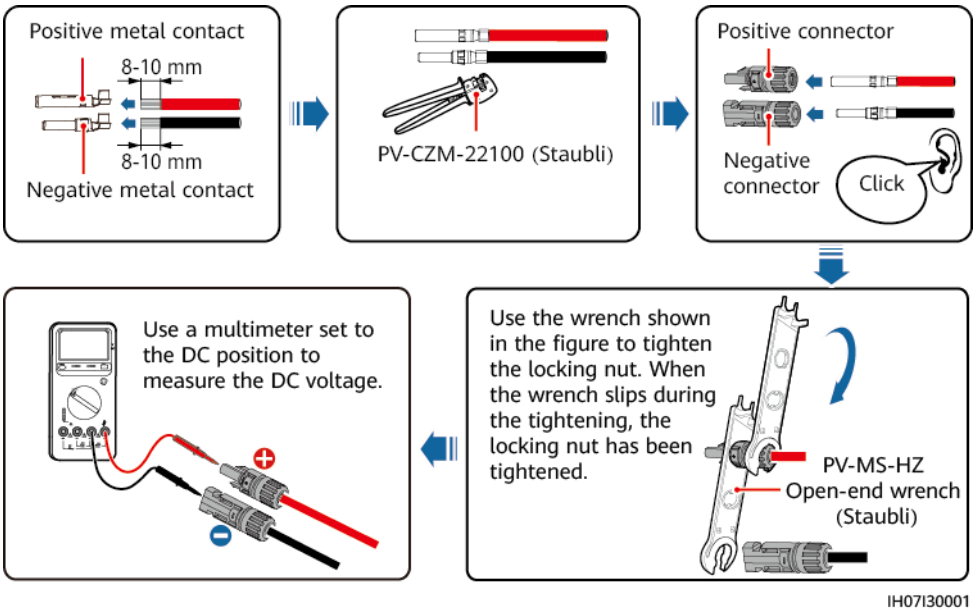

----End

Removing DC Connectors

WARNING

Before removing the positive and negative connectors, ensure that the DC switch is OFF.

To remove the positive and negative connectors from the SUN2000, insert an open-end wrench into the bayonet and press the wrench with force. Then remove the DC connectors with caution.

Figure 5-14 Removing DC connectors

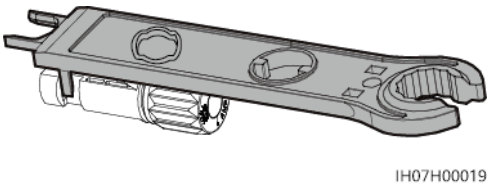

5.5 (Optional) Connecting Battery Cables

Prerequisites

DANGER

- Battery short-circuit may cause personal injury. The high transient current generated by a short-circuit may release a surge of energy and cause fire.
- Do not connect or disconnect the battery cables when the SUN2000 is running. Otherwise, electric shocks may occur.
- Before connecting the battery cables, ensure that the DC switch on the SUN2000 and all the switches connecting to the SUN2000 are OFF, and the SUN2000 has no residual electricity. Otherwise, the high voltage of the SUN2000 and battery may result in electric shocks.
- If no battery connects to the SUN2000, do not remove the watertight caps from the battery terminals. Otherwise, the protection level of the SUN2000 will be affected. If a battery connects to the SUN2000, set aside the watertight caps. Reinstall the watertight caps immediately after removing the connectors.

A battery switch can be configured between the SUN2000 and the battery to ensure that the SUN2000 can be safely disconnected from the battery.

 Copyright © Huawei Technologies Co., Ltd.

WARNING

- Do not connect loads between the SUN2000 and the battery.
- The battery cables should be connected correctly. That is, the positive and negative terminals of the battery connect to the positive and negative battery terminals on the SUN2000 respectively. Otherwise, the SUN2000 may be damaged, or even fire could happen.

NOTICE

- During the installation of batteries and the SUN2000, the positive or negative terminals of batteries may be short-circuited to ground if the power cable is not properly installed or routed. In this case, an AC or DC short circuit may occur and damage the SUN2000. The caused device damage is not covered under any warranty.
- The cabling distance between the battery and the SUN2000 should be less than or equal to 10 meters (recommended: within 5 meters).

Procedure

Step 1 Assemble the positive and negative connectors by referring to Connecting DC Input Power Cables.

DANGER

- The battery voltage may result in serious injury. Use dedicated insulation tools when connecting cables.
- Ensure that cables are correctly connected between the battery terminal and the battery switch, and between the battery switch and the SUN2000 battery terminal.

NOTICE

Cables with high rigidity, such as armored cables, are not recommended as battery cables, because poor contact may be caused by the bending of the cables.

Step 2 Insert the positive and negative connectors into corresponding battery terminals on the SUN2000.

NOTICE

After the positive and negative connectors snap into place, pull the battery cables back to ensure that they are connected securely.

 Copyright © Huawei Technologies Co., Ltd.

Figure 5-15 Connecting battery cables

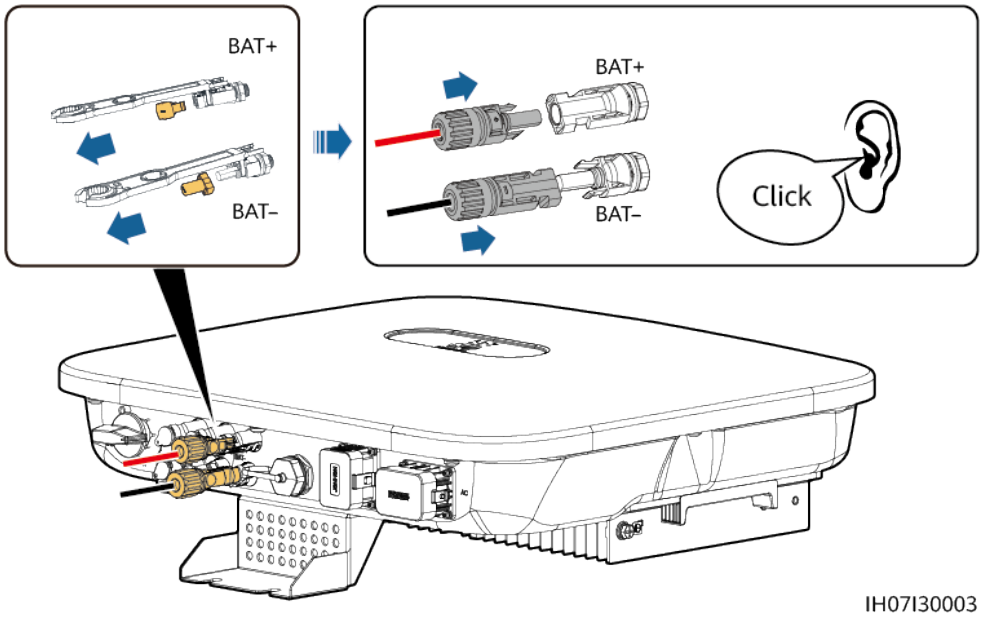

----End

5.6 Install the Smart Dongle

Procedure

NOTE

- If WLAN-FE communication is used, install the WLAN-FE Smart Dongle (SDongleA-05). The WLAN-FE Smart Dongle is delivered with the SUN2000.
- If 4G communication is used, install the 4G Smart Dongle (SDongleA-03). The 4G Smart Dongle needs to be purchased by the user.

- WLAN-FE Smart Dongle (FE Communication)

You are advised to use a Cat 5e outdoor shielded network cable (outer diameter < 9 mm; internal resistance ≤ 1.5 ohms/10 m) and shielded RJ45 connectors.

Figure 5-16 Installing a WLAN-FE Smart Dongle (FE communication)

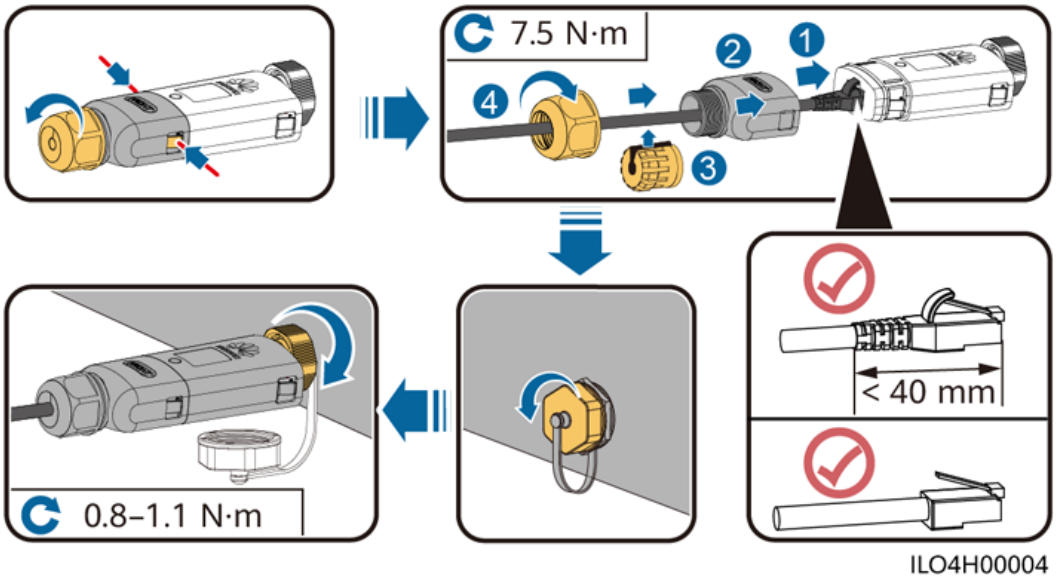

- (Optional) 4G Smart Dongle (4G communication)

NOTE

- If your Smart Dongle is not equipped with a SIM card, prepare a standard SIM card (size: 25 mm x 15 mm) with the capacity greater than or equal to 64 KB.
- When installing the SIM card, determine its installation direction based on the silk screen and arrow on the card slot.
- Press the SIM card in place to lock it, indicating that the SIM card is correctly installed.
- When removing the SIM card, push it inwards to eject it.
- When reinstalling the shell of the Smart Dongle, ensure that the buckle springs back in place and a click sound is generated.

Figure 5-17 Installing a 4G Smart Dongle

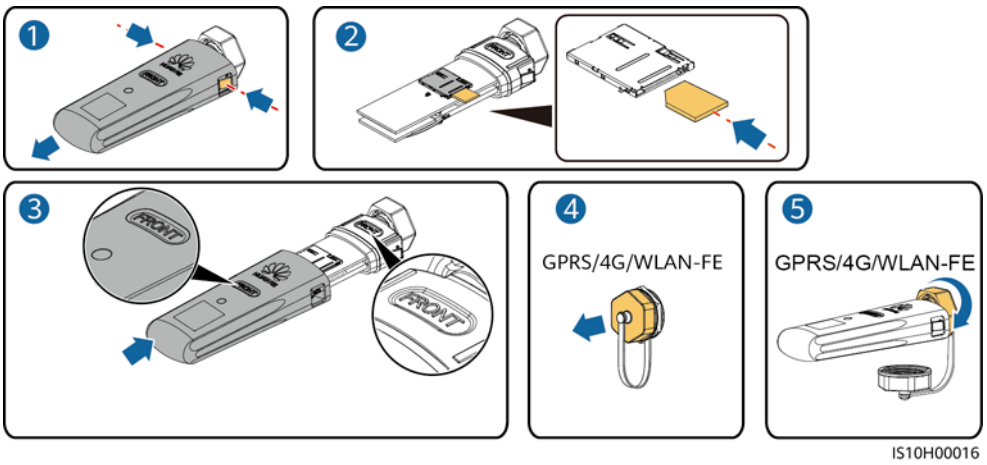

NOTE

There are two types of Smart Dongle.

- For details about how to operate the WLAN-FE Smart Dongle SDongleA-05, see SDongleA-05 Quick Guide (WLAN-FE). You can also scan the QR code to obtain the document.
- For details about how to operate the 4G Smart Dongle SDongleA-03, see SDongleA-03 Quick Guide (4G). You can also scan the QR code to obtain the document.

The quick guide is delivered with the Smart Dongle.

5.7 (Optional) Connecting the Signal Cable

COM Port Pin Definitions

NOTICE

- When laying out the signal cable, separate it from the power cable and keep it away from strong interference sources to avoid strong communication interference.
- Ensure that the protective layer of the cable is inside the connector, that excess core wires are cut off from the protection layer, that the exposed core wire is totally inserted into the cable hole, and that the cable is connected securely.

Figure 5-18 Pin definitions

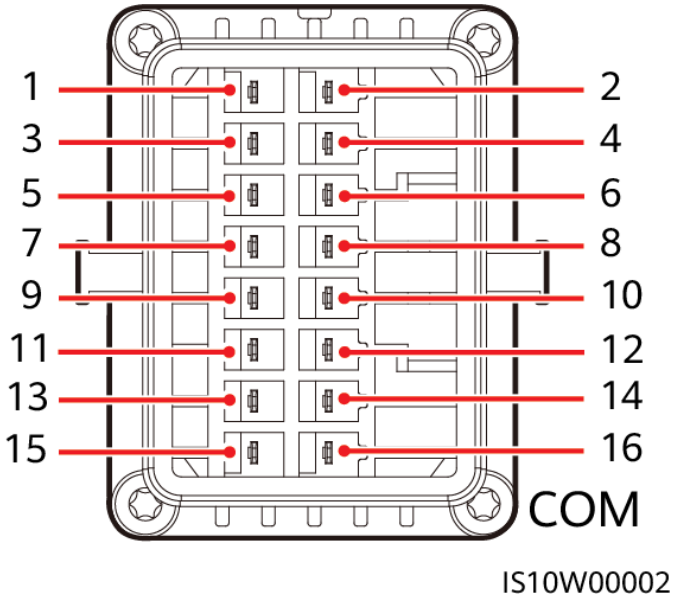

NOTE

- If the RS485 communications cables of devices such as the smart power sensor and battery are connected to the SUN2000 at the same time, the pins RS485A2 (pin 7), RS485B2 (pin 9), and PE (pin 5) are shared.
- If both the battery enable signal cable and rapid shutdown switch signal cable are connected to the SUN2000 at the same time, the GND pin (pin 13) is shared.

Pin	Definition	Functions	Remarks	Pin	Definition	Functions	Remarks
1	485A1-1	RS485A, RS485 differential signal+	Used for SUN2000 cascading or connecting to the RS485 signal port on the SmartLogger	2	485A1-2	RS485A, RS485 differential signal+	Used for SUN2000 cascading or connecting to the RS485 signal port on the SmartLogger
3	485B1-1	RS485B, RS485 differential signal–		4	485B1-2	RS485B, RS485 differential signal–	
5	PE	Ground point on the shield layer	-	6	PE	Ground point on the shield layer	-
7	485A2	RS485A, RS485 differential signal+	Used to connect to the RS485 signal port on a power meter or battery	8	DIN1	Digital input signal 1+	Used to connect to dry contacts for grid scheduling and used as a reserved port for feedback signals of the Smart Backup Box
9	485B2	RS485B, RS485 differential signal–		10	DIN2	Digital input signal 2+	Used to connect to dry contacts for grid scheduling
11	EN	Enable signal	Used to connect to the reserved port for the enable signal on the battery	12	DIN3	Digital input signal 3+	
13	GND	GND	–	14	DIN4	Digital input signal 4+	
15	DIN5	Rapid shutdown	Used to connect to the rapid shutdown DI signal port or used as the reserved port for the signal cable	16	GND	GND of DI1/DI2/DI3/DI4	Used to connect to the GND of DI1/DI2/DI3/DI4

 Copyright © Huawei Technologies Co., Ltd.

Pin	Definition	Functions	Remarks	Pin	Definition	Functions	Remarks
			of the NS protection device.				

Networking Modes

- Smart Dongle networking

Figure 5-19 Smart Dongle networking (the dashed box indicates optional components)

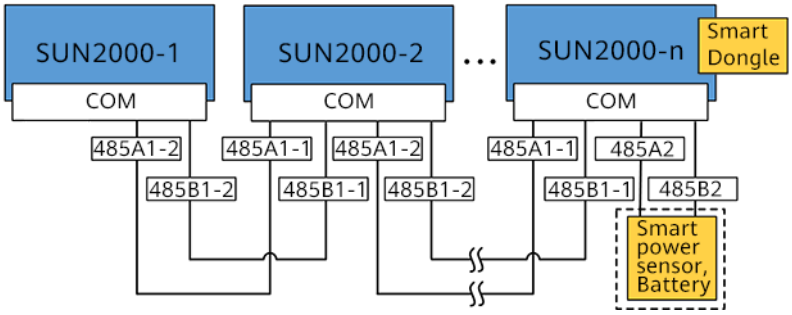

Table 5-3 Usage Restrictions

Smart Dongle	Usage Restrictions	Actual Connection	
	Maximum Number of Devices That Can Be Connected to the Smart Dongle	Number of SUN2000s	Number of Other Devices[a]
4G	10	n ≤ 10	≤ 10–n
WLAN-FE	10	n ≤ 10	≤ 10–n
Note a: If the power meter and battery are connected through the RS485A2 and RS485B2 ports, they are not included as cascaded devices.			

NOTE

- If the SUN2000 is networked with the Smart Dongle, it cannot connect to the SmartLogger.
- A DTSU666-H smart power meter (provided by Huawei) is required to prevent backflow.
- The power meter and Smart Dongle must be connected to the same SUN2000.
- If a battery is connected, a maximum of three inverters can be cascaded. Any one of the inverters can be connected to the battery. (The inverter connected to the Smart Dongle must be connected to the battery.)

- If the SUN2000-(3KTL–12KTL)-M1 and SUN2000-(2KTL–6KTL)-L1 are cascaded, a maximum of three inverters can be cascaded.

- SmartLogger networking

Figure 5-20 SmartLogger networking (the dashed box indicates optional components)

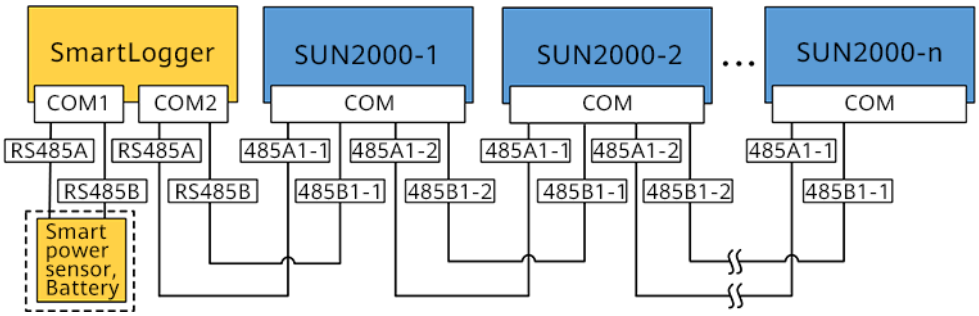

NOTE

- A maximum of 80 devices can connect to a single SmartLogger. You are advised to connect fewer than 30 devices to each RS485 route.
- If the SUN2000 is networked over the SmartLogger, it cannot connect to the Smart Dongle.
- A DTSU666-H smart power meter (provided by Huawei) is required to prevent backflow.
- To ensure the system response speed, it is recommended that the power meter be connected to one COM port.

5.7.1 Connecting the RS485 Communications Cable (Inverter Cascading)

Procedure

Step 1 Connect the signal cable to the signal cable connector.

Figure 5-21 Installing the cable

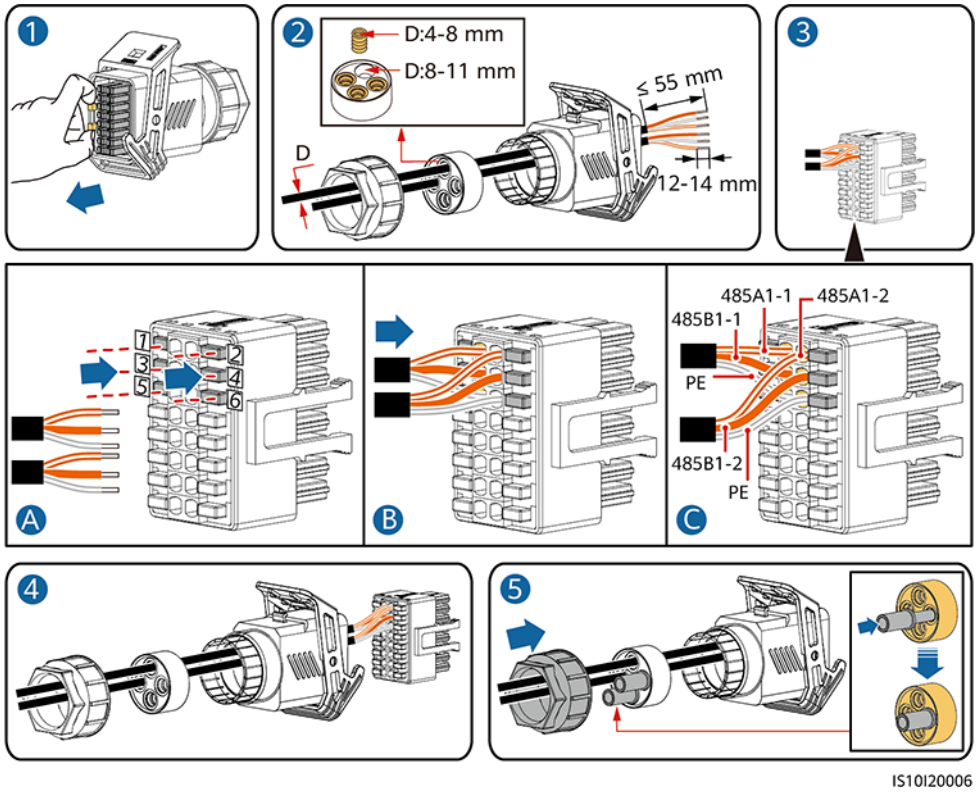

Step 2 Connect the signal cable connector to the COM port.

Figure 5-22 Securing the signal cable connector

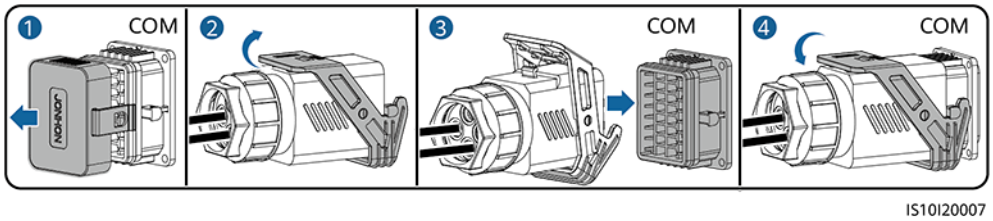

----End

5.7.2 Connecting the RS485 Communications Cable (Smart Power Sensor)

Cable Connection

The following figure shows the cable connections between the inverter and the Smart Power Sensor.

Figure 5-23 Cable connection (Three Phase Three Wire)

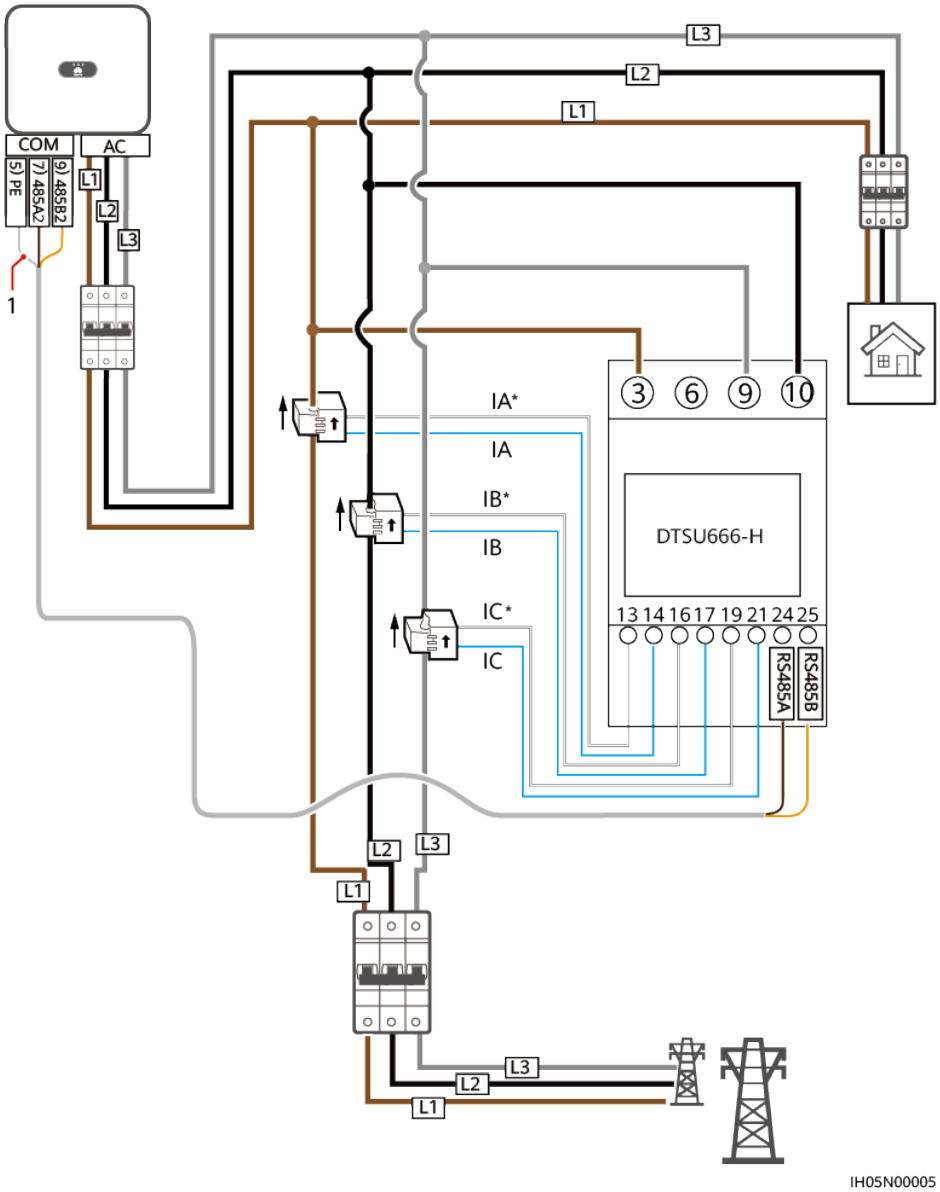

Figure 5-24 Cable connection (Three Phase Four Wire)

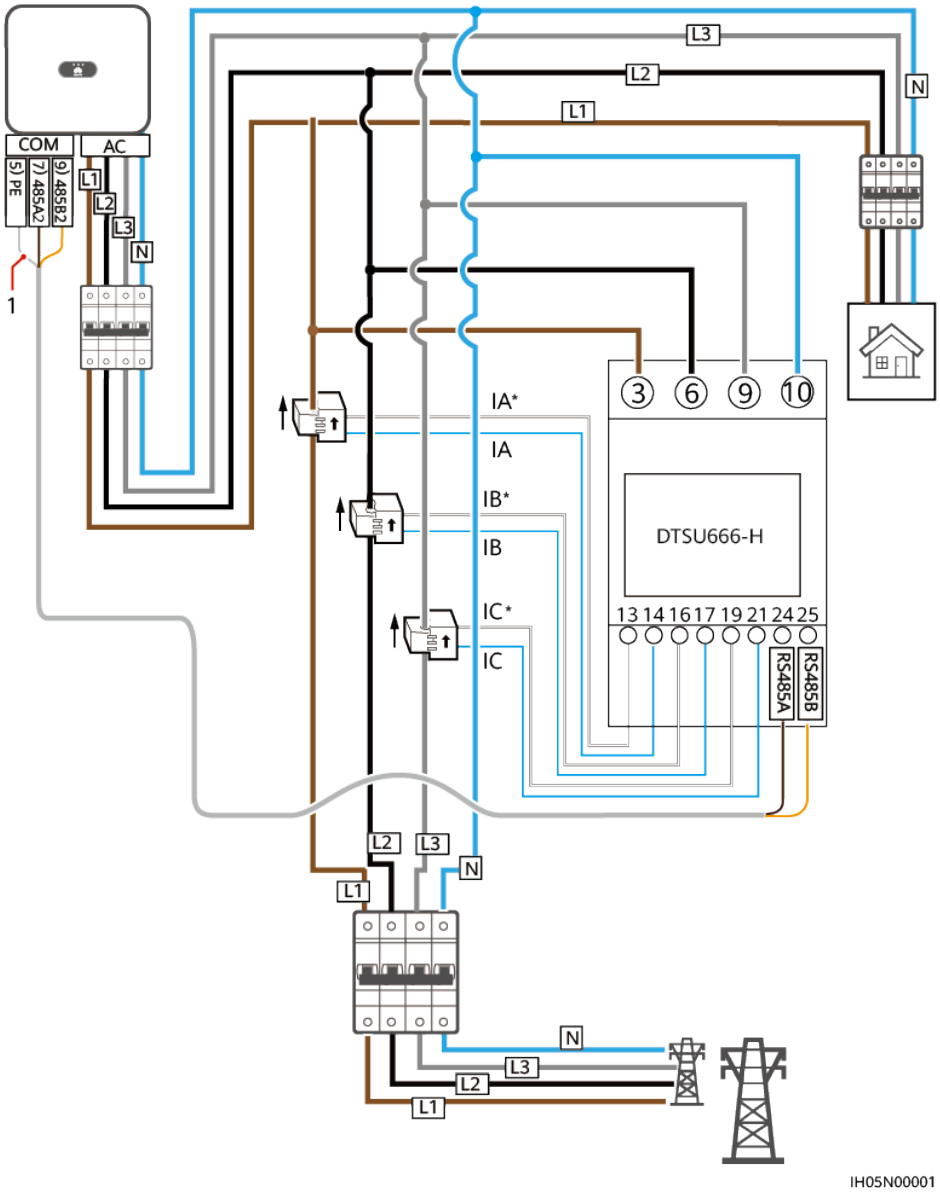

(1) Shielding layer of the signal cable

Procedure

Step 1 Connect the signal cable to the signal cable connector.

Figure 5-25 Installing the cable

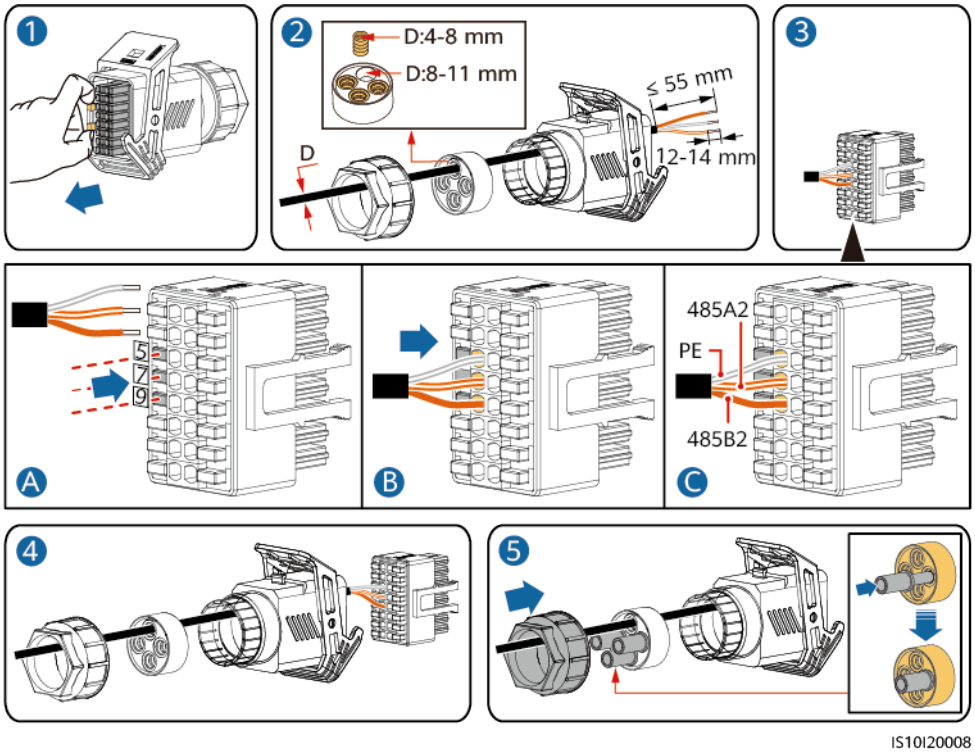

Step 2 Connect the signal cable to the COM port.

Figure 5-26 Securing the signal cable connector

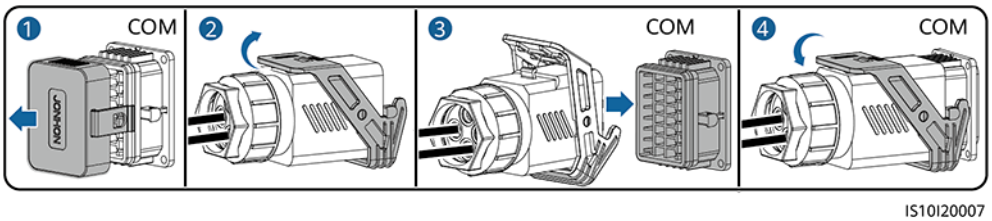

----End

5.7.3 Connecting an RS485 Communications Cable (Between a Power Meter and a Battery)

Procedure

Step 1 Connect the signal cable to the signal cable connector.

Figure 5-27 Installing the cable

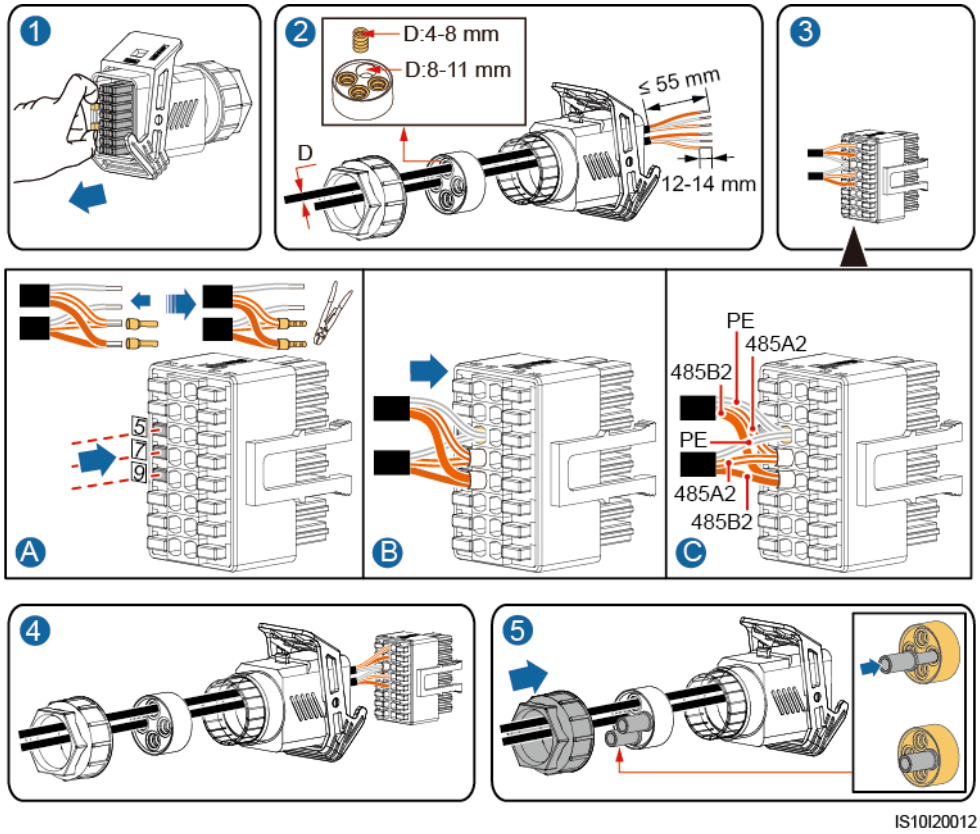

Step 2 Connect the signal cable connector to the COM port.

Figure 5-28 Securing the signal cable connector

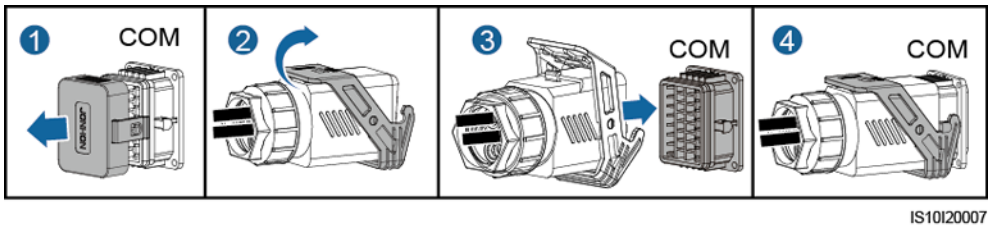

----End

5.7.4 Connecting the Power Grid Scheduling Signal Cable

Cable Connection

The following figure shows the cable connections between the inverter and the Ripple Control Device.

Figure 5-29 Cable connection

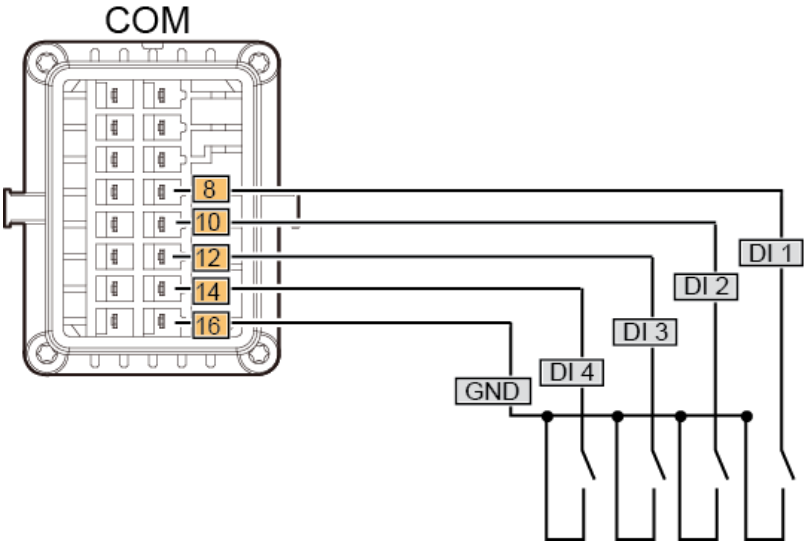

Procedure

Step 1 Connect the signal cable to the signal cable connector.

Figure 5-30 Installing the cable

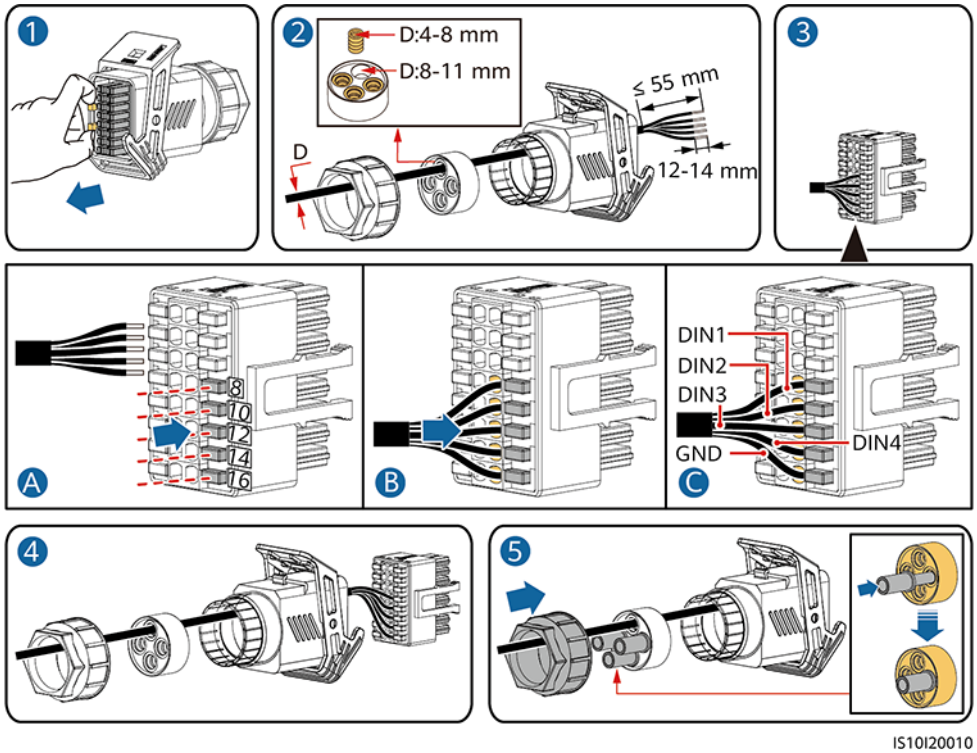

Step 2 Connect the signal cable to the COM port.

Figure 5-31 Securing the signal cable connector

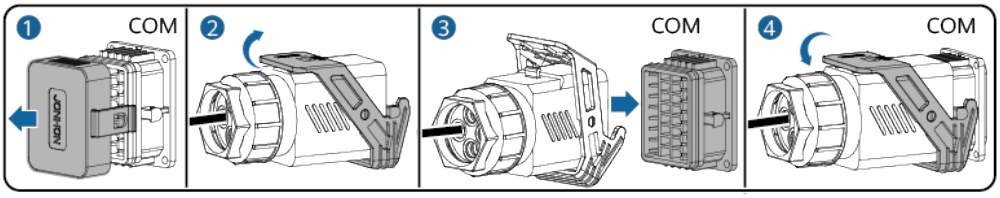

----End

5.7.5 Connecting a Signal Cable to the Smart Backup Box

Procedure

Step 1 Connect the signal cable to the signal cable connector.

Figure 5-32 Installing the cable

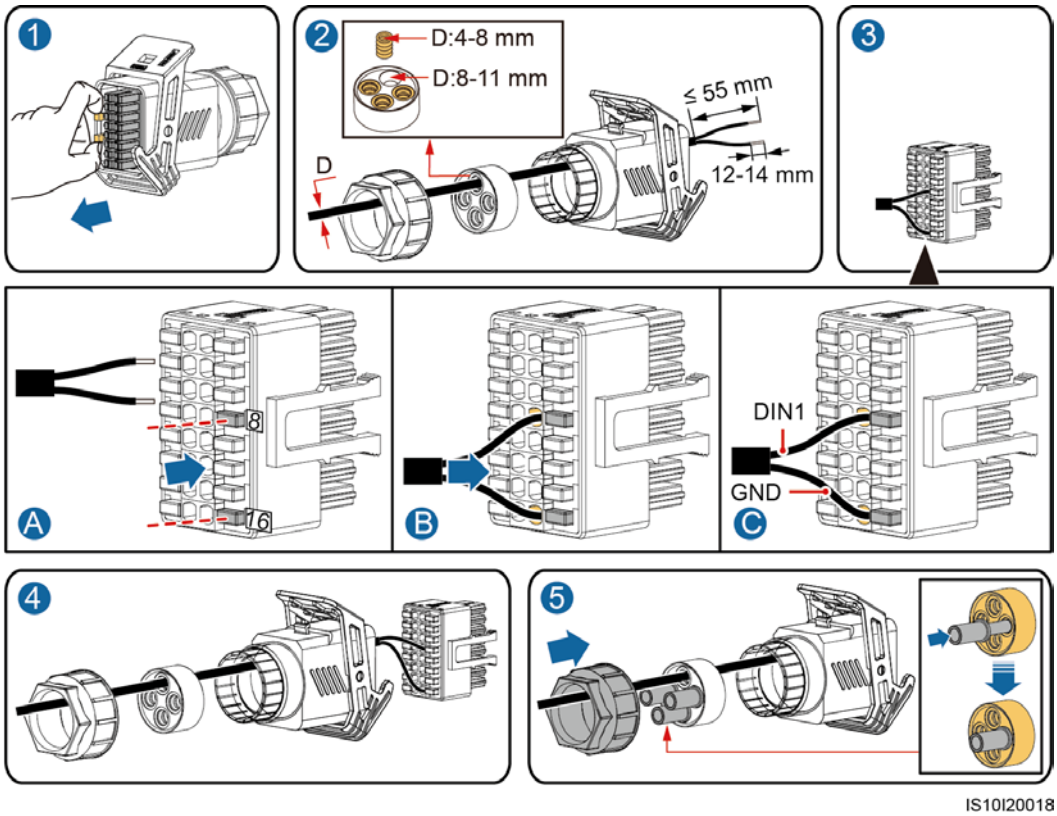

Step 2 Connect the signal cable connector to the COM port.

Figure 5-33 Securing the signal cable connector

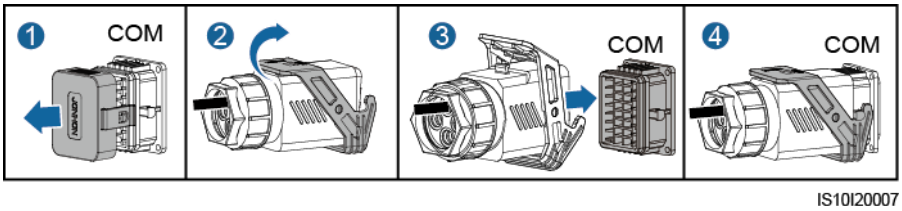

----End

6 Commissioning

6.1 Checking Before Power-On

Table 6-1 Checklist

No.	Item	Acceptance Criterion
1	SUN2000 installation	The SUN2000 is installed correctly and securely.
2	Smart Dongle	The Smart Dongle is installed correctly and securely.
3	Cable routing	The cables are routed properly as required by the customer.
4	Cable ties	Cable ties are secured evenly and no burr exists.
5	Reliable grounding	The PE cable is connected correctly and securely.
6	Switch	DC switches and all the switches connecting to the SUN2000 are OFF.
7	Cable connection	The AC output power cable, DC input power cables, battery cable, and signal cable are connected correctly and securely.
8	Unused terminals and ports	Unused terminals and ports are locked by watertight caps.
9	Installation environment	The installation space is proper, and the installation environment is clean and tidy.

 Copyright © Huawei Technologies Co., Ltd.

6.2 SUN2000 power-on

Important Notes

NOTICE

Before turning on the AC switch between the SUN2000 and the power grid, check that the AC voltage is within the specified range using a multimeter.

Procedure

Step 1 If a battery is connected, turn on the battery switch.

Step 2 Turn on the AC switch between the SUN2000 and the power grid.

NOTICE

If you perform Step 3 before Step 2, the SUN2000 reports a **Grid Failure** alarm. The SUN2000 can start properly after the fault is automatically cleared.

Step 3 Turn on the DC switch at the bottom of the SUN2000.

Step 4 Turn on the DC switch (if any) between the PV string and the SUN2000.

Step 5 Wait for about 1 minute and observe the LED indicators on the SUN2000 to check its running status.

Table 6-2 LED indicator description

Category	Status		Meaning
Running indication 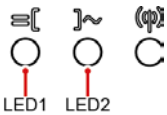	**LED1**	**LED2**	N/A
	Steady green	Steady green	The SUN2000 is operating in grid-tied mode.
	Blinking green at long intervals (on for 1s and then off for 1s)	Off	The DC is on and the AC is off.
	Blinking green at long intervals (on for 1s and then off for 1s)	Blinking green at long intervals (on for 1s and then off for 1s)	The DC is on, the AC is on, and the SUN2000 is not exporting power to the power grid.
	Off	Blinking green at long intervals (on for 1s and then off for 1s)	The DC is off and the AC is on.
	Off	Off	Both the DC and AC are off.

 Copyright © Huawei Technologies Co., Ltd.

Category	Status			Meaning
	Blinking red at short intervals (on for 0.2s and then off for 0.2s)	N/A		There is a DC environmental alarm, such as an alarm indicating that High String Input Voltage, String Reverse Connection, or Low Insulation Resistance.
	N/A	Blinking red at short intervals (on for 0.2s and then off for 0.2s)		There is an AC environmental alarm, such as an alarm indicating Grid Undervoltage, Grid Overvoltage, Grid Overfrequency, or Grid Underfrequency.
	Steady red	Steady red		Fault
Communication indication 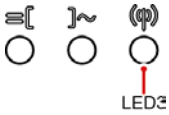	**LED3**			N/A
	Blinking green at short intervals (on for 0.2s and then off for 0.2s)			Communication is in progress. (When a mobile phone is connected to the SUN2000, the indicator first indicates that the phone is connected to the SUN2000): blinks green at long intervals.)
	Blinking green at long intervals (on for 1s and then off for 1s)			The mobile phone is connected to the SUN2000.
	Off			There is no communication.
Device replacement indication	**LED1**	**LED2**	**LED3**	N/A
	Steady red	Steady red	Steady red	The SUN2000 hardware is faulty. The SUN2000 needs to be replaced.

Step 6 (Optional) Observe the LED indicator on the Smart Dongle to check its running status.

- WLAN-FE Smart Dongle

Figure 6-1 WLAN-FE Smart Dongle

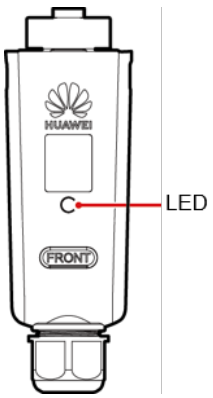

Table 6-3 Indicator description

Indicators	Status	Remarks	Description
-	Off	Normal	The Smart Dongle is not secured or not powered on.
Yellow (blinking green and red simultaneously)	Steady on		The Smart Dongle is secured and powered on.
Red	Blinking at short intervals (on for 0.2s and then off for 0.2s)		The parameters for connecting to the router are not set.
Red	Steady on	Abnormal	The Smart Dongle is faulty. Replace the Smart Dongle.
Blinking red and green alternatively	Blinking at long intervals (on for 1s and then off for 1s)	Abnormal	No communication with the SUN2000 • Remove and then insert the Smart Dongle. • Check whether the SUN2000 matches the Smart Dongle. • Connect the Smart Dongle to another SUN2000. Check whether the Smart Dongle is faulty or the USB port of the SUN2000 is faulty.
Green	Blinking at long intervals (on for 0.5s on and then off for 0.5s)	Normal	Connecting to the router.
Green	Steady on		Connected to the management system.
Green	Blinking at short intervals (on for 0.2s and then off for 0.2s)		The SUN2000 communicates with the management system through the Smart Dongle.

- 4G Smart Dongle

Table 6-4 Indicator description

Indicators	Status	Remarks	Description
-	Off	Normal	The Smart Dongle is not secured or not powered on.
Yellow (blinking green and red simultaneously)	Steady on	Normal	The Smart Dongle is secured and powered on.
Green	The blinking interval is 2s. The indicator is on for 0.1s and then off for 1.9s alternately.	Normal	Dialing (lasting for less than 1 minute)
		Abnormal	If the duration is longer than 1 minute, the 4G parameter settings are incorrect. Reset the parameters.
	Blinking at long intervals (on for 1s and then off for 1s)	Normal	The dialup is successful (lasting for less than 30s).
		Abnormal	If the duration is longer than 30s, the management system parameters are incorrectly set. Reset the parameters.
	Steady on	Normal	Connected to the management system.
	Blinking at short intervals (on for 0.2s and then off for 0.2s)		The SUN2000 communicates with the management system through the Smart Dongle.
Red	Steady on	Abnormal	The Smart Dongle is faulty. Replace the Smart Dongle.
	Blinking at short intervals (on for 0.2s and then off for 0.2s)		The Smart Dongle has no SIM card or the SIM card is in poor contact. Check whether the SIM card has been installed or is in good contact. If not, install the SIM card or remove and insert the SIM card.
	Blinking at long intervals (on for 1s and then off for 1s)		The Smart Dongle fails to be connected to a management system because the SIM card has no signals, weak signal

 Copyright © Huawei Technologies Co., Ltd.

Indicators	Status	Remarks	Description
			strength, or no traffic. If the Smart Dongle is reliably connected, check the SIM card signal through the SUN2000 app. If no signal is received or the signal strength is weak, contact the carrier. Check whether the tariff and traffic of the SIM card are normal. If not, recharge the SIM card or buy traffic.
Blinking red and green alternatively	Blinking at long intervals (on for 1s and then off for 1s)		No communication with the SUN2000 • Remove and then insert the Smart Dongle. • Check whether the SUN2000 matches the Smart Dongle. • Connect the Smart Dongle to another SUN2000. Check whether the Smart Dongle is faulty or the USB port of the SUN2000 is faulty.

----End

 Copyright © Huawei Technologies Co., Ltd.

7 Man-Machine Interaction

7.1 App Commissioning

7.1.1 Downloading the FusionSolar App

Search for **FusionSolar** in Google Play (Android) to download and install the app. You can also scan one of the following QR codes to obtain the app.

Figure 7-1 QR code

Google Play (Android)

FusionSolar (Android)

NOTE

- The latest Android version must be used for device commissioning. The iOS version is not updated and can be used only for viewing PV plant information. For iOS users, you can search for **FusionSolar** in the App Store or scan the following QR code to download the iOS version.
- The screenshots are for reference only. The actual screens prevail.

7.1.2 (Optional) Registering an Installer Account

NOTE

- If you have an installer account, skip this step.
- You can register an account only using a mobile phone only in China.
- The mobile number or email address used for registration is the user name for logging in to the FusionSolar app.

Create the first installer account and create a domain named after the company name.

Figure 7-2 Creating the first installer account

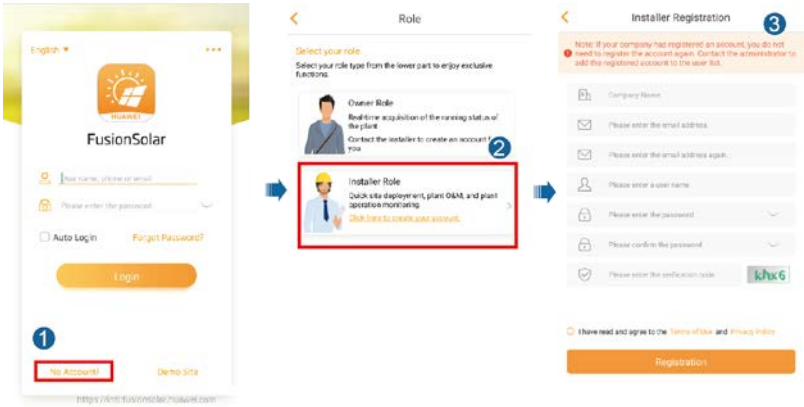

NOTICE

To create multiple installer accounts for a company, log in to the FusionSolar app and tap **New User** to create an installer account.

Figure 7-3 Creating multiple installer accounts for the same company

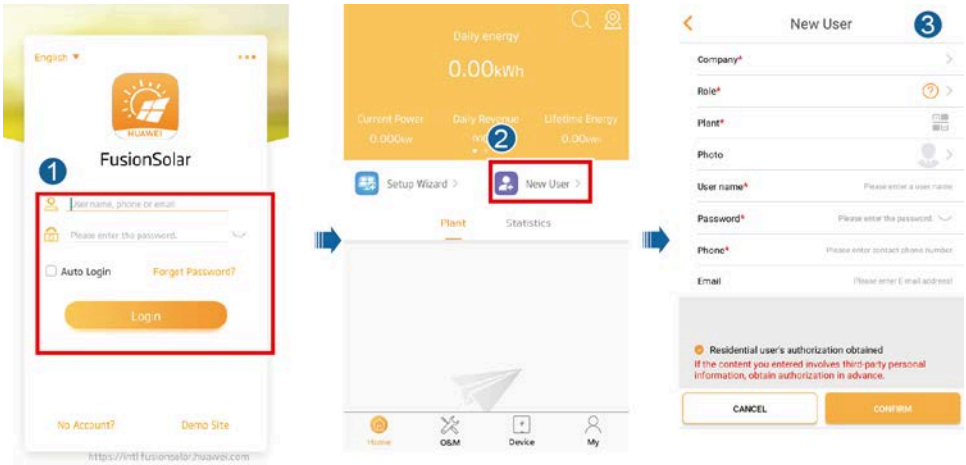

7.1.3 Creating a PV Plant and a User

Figure 7-4 Creating a PV plant and a user

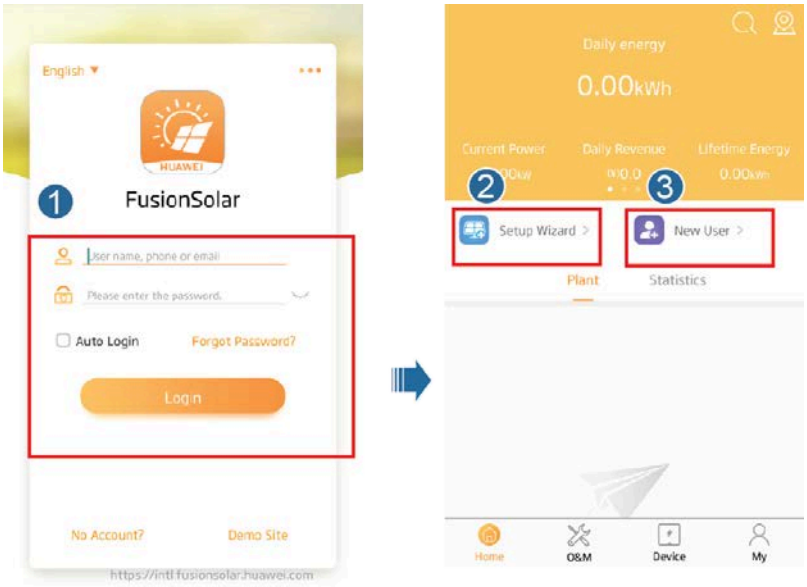

NOTE

For details about how to use the site deployment wizard, see *FusionSolar App Quick Guide*. You can also scan the QR code to obtain the document.

7.1.4 (Optional) Setting the Physical Layout of the Smart PV Optimizers

NOTE

- If smart PV optimizers are configured for PV strings, ensure that the smart PV optimizers have been successfully connected to the SUN2000 before performing the operations in this section.
- Check that the SN labels of smart PV optimizers are correctly attached to the physical layout template.
- Take and save a photo of the physical layout template. Keep your phone parallel to the template and take a photo in landscape mode. Ensure that the four positioning points in the corners are in the frame. Ensure that each QR code is attached within the frame.
- For details about the physical layout of smart PV optimizers, see *FusionSolar App Quick Guide*. You can also scan the QR code to obtain the document.

Scenario 1: Setting on the FusionSolar Server Side (Solar Inverter Connected to the Management System)

Step 1 Log in to the FusionSolar app and tap the plant name on the **Home** screen to access the plant screen. Select **Plant layout**, tap , and upload the physical layout template photo as prompted.

Figure 7-5 Uploading the physical layout template photo (App)

NOTE

You can also upload the physical layout template photo on the WebUI as follows: Log in to https://intl.fusionsolar.huawei.com to access the WebUI of the FusionSolar Smart PV Management System. On the home page, click the plant name to go to the plant page. Choose **Plant layout**, click **Add Physical Layout** > , and upload the physical layout template photo.

Figure 7-6 Uploading the physical layout template photo (WebUI)

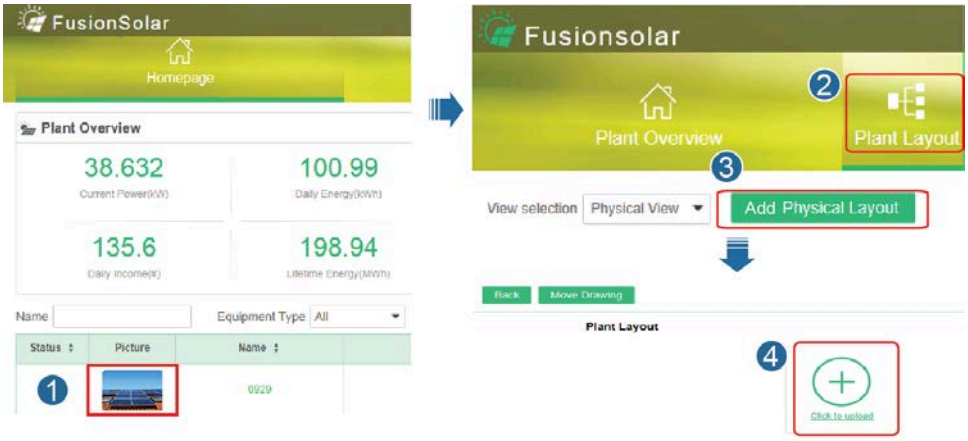

Step 2 Log in to https://intl.fusionsolar.huawei.com to access the WebUI of the FusionSolar Smart PV Management System. On the **Homepage** page, click the plant name to go to the plant page. Select **Plant layout**. Choose > **Generate with AI**, and create a physical layout as prompted. You can also manually create a physical location layout.

Figure 7-7 Physical layout design of PV modules

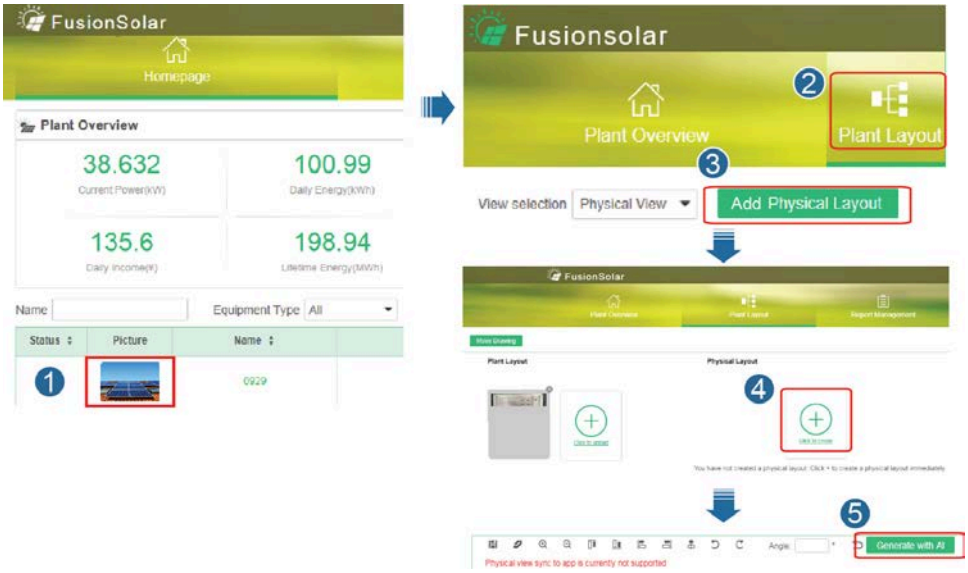

----End

Scenario 2: Setting on the Solar Inverter Side (Solar Inverter Not Connected to the Management System)

Step 1 Access the Device Commissioning screen on the FusionSolar app to set the physical layout of Smart PV Optimizers.

1. Log in to the FusionSolar app. On the **Device Commissioning** screen, choose **Maintenance** > **Optimizer layout**. The **Optimizer layout** screen is displayed.
2. Tap the blank area. The **Identify image** and **Add PV modules** buttons are displayed. You can use either of the following methods to perform operations as prompted:
   - Method 1: Tap **Identify image** and upload the physical layout template photo to complete the optimizer layout. (The optimizers that fail to be identified need to be manually bound.)
   - Method 2: Tap **Add PV modules** to manually add PV modules and bind the optimizers to the PV modules.

Figure 7-8 Physical layout design of PV modules

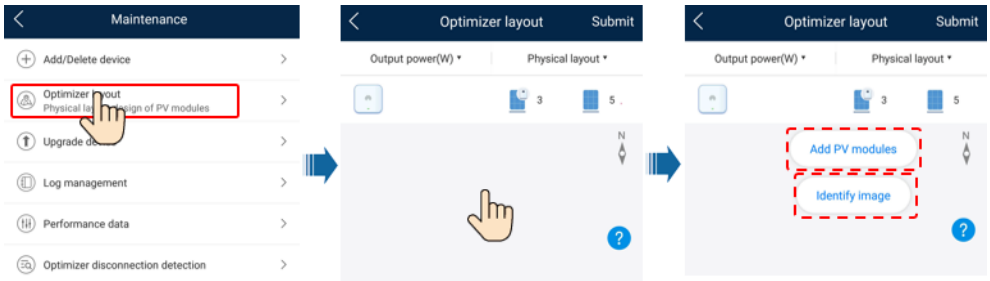

----End

7.1.5 Detect optimizer disconnection

Log in to the FusionSolar app, choose **Device Commissioning** > **Maintenance** > **Optimizer disconnection detection**, tap the detection button to detect the optimizer disconnection, and rectify the fault based on the detection result.

Figure 7-9 Detect optimizer disconnection

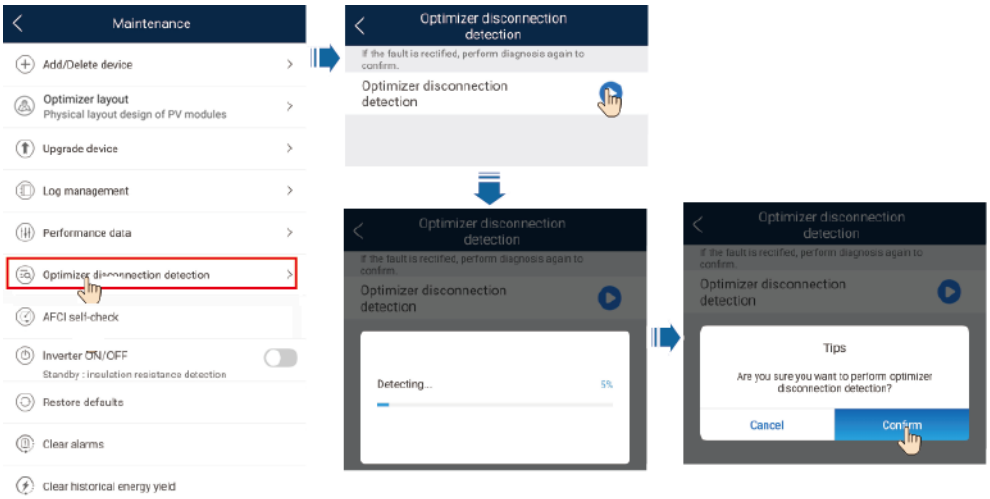

7.2 Parameters Settings

Go to the **Device Commissioning** screen and set SUN2000 parameters. For details about entering the **Device Commissioning** screen, see B Device Commissioning.

To set more parameters, tap **Settings**. For details about the parameters, see the *FusionSolar APP and SUN2000 App User Manual*. You can also scan the QR code to obtain the document.

7.2.1 Energy Control

On the home screen, tap **Power adjustment** to perform the corresponding operation.

Figure 7-10 Energy control

7.2.1.1 Grid-tied Point Control

Function

Limits or reduces the output power of the PV power system to ensure that the output power is within the power deviation limit.

Procedure

Step 1 On the home screen, choose **Power adjustment** > **Grid-tied point control**.

Figure 7-11 Grid-tied point control

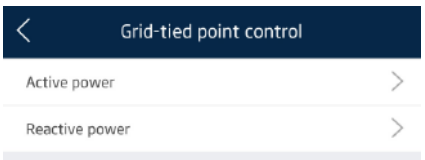

Table 7-1 Grid-tied point control

Parameter Name			Description
Active power	Unlimited	-	If this parameter is set to **Unlimited**, the output power of the SUN2000 is not limited and the SUN2000 can connect to the power grid at the rated power.
	Grid connection with zero power	Closed-loop controller	• If multiple SUN2000s are cascaded, set this parameter to **SDongle/SmartLogger**. • If there is only one SUN2000, set this parameter to **Inverter**.
		Limitation mode	**Total power** indicates export limitation of the total power at the grid-tied point.
		Power adjustment period	Specifies the shortest interval for a single anti-backfeeding adjustment.
		Power control hysteresis	Specifies the dead zone for adjusting the SUN2000 output power. If the power fluctuation is within the power control

Parameter Name			Description
			hysteresis, the power is not adjusted.
		Active power output limit for fail-safe	Specifies the derating value of the SUN2000 active power by percentage. If the Smart Dongle does not detect any meter data or the communication between the Smart Dongle and the SUN2000 is disconnected, the Smart Dongle delivers the derating value of the SUN2000 active power by percentage.
		Communication disconnection fail-safe	In the SUN2000 anti-backfeeding scenario, if this parameter is set to **Enable**, the SUN2000 will derate according to the active power derating percentage when the communication between the SUN2000 and the Smart Dongle is disconnected for a period longer than **Communication disconnection detection time**.
		Communication disconnection detection time	Specifies the time for determining the communication disconnection between the SUN2000 and the Dongle. This parameter is displayed when **Communication disconnection fail-safe** is set to **Enable**.
	Grid connection with limited power (kW)	Closed-loop controller	• If multiple SUN2000s are cascaded, set this parameter to **SDongle/SmartLogger**. • If there is only one SUN2000, set this parameter to **Inverter**.
		Limitation mode	**Total power** indicates export limitation of the total power at the grid-tied point.
		Maximum grid feed-in power	Specifies the maximum active power transmitted from the grid-tied point to the power grid.
		Power adjustment period	Specifies the shortest interval for a single anti-backfeeding adjustment.
		Power control hysteresis	Specifies the dead zone for adjusting the SUN2000 output power. If the power fluctuation is within the power control hysteresis, the power is not adjusted.
		Active power output limit for fail-safe	Specifies the derating value of the SUN2000 active power by percentage. If the Smart Dongle does not detect any meter data or the communication between the Smart Dongle and the SUN2000 is disconnected, the Smart Dongle delivers the derating value of the SUN2000 active

 Copyright © Huawei Technologies Co., Ltd.

Parameter Name			Description
			power by percentage.
		Communication disconnection fail-safe	In the SUN2000 anti-backfeeding scenario, if this parameter is set to **Enable**, the SUN2000 will derate according to the active power derating percentage when the communication between the SUN2000 and the Smart Dongle is disconnected for a period longer than **Communication disconnection detection time**.
		Communication disconnection detection time	Specifies the time for determining the communication disconnection between the SUN2000 and the Dongle. This parameter is displayed when **Communication disconnection fail-safe** is set to **Enable**.
	Grid connection with limited power (%)	Closed-loop controller	• If multiple SUN2000s are cascaded, set this parameter to **SDongle/SmartLogger**. • If there is only one SUN2000, set this parameter to **Inverter**.
		Limitation mode	**Total power** indicates export limitation of the total power at the grid-tied point.
		PV plant capacity	Specifies the total maximum active power in the SUN2000 cascading scenario.
		Maximum grid feed-in power	Specifies the percentage of the maximum active power of the grid-tied point to the PV plant capacity.
		Power adjustment period	Specifies the shortest interval for a single anti-backfeeding adjustment.
		Power control hysteresis	Specifies the dead zone for adjusting the SUN2000 output power. If the power fluctuation is within the power control hysteresis, the power is not adjusted.
		Active power output limit for fail-safe	Specifies the derating value of the SUN2000 active power by percentage. If the Smart Dongle does not detect any meter data or the communication between the Smart Dongle and the SUN2000 is disconnected, the Smart Dongle delivers the derating value of the SUN2000 active power by percentage.
		Communication disconnection fail-safe	In the SUN2000 anti-backfeeding scenario, if this parameter is set to **Enable**, the SUN2000 will derate according to the active power derating percentage when the

Parameter Name			Description
			communication between the SUN2000 and the Smart Dongle is disconnected for a period longer than **Communication disconnection detection time**.
		Communication disconnection detection time	Specifies the time for determining the communication disconnection between the SUN2000 and the Dongle. This parameter is displayed when **Communication disconnection fail-safe** is set to **Enable**.

----End

7.2.1.2 Battery Control

Function

If the SUN2000 connects to a battery, you need to set battery parameters.

Forcible Charge and Discharge

Step 1 On the home screen, choose **Power adjustment** > **Battery control** > **Forced charge/discharge** and perform operations as required. Tap **Submit**.

Figure 7-12 Forced charge/discharge

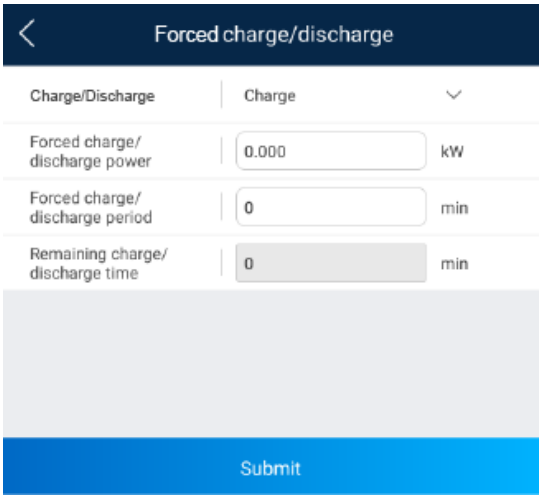

Table 7-2 Description of forced charge/discharge parameters

Parameter	Description	Value Range
Charge/Discharge	Specifies the forced	• Stop

Parameter	Description	Value Range
	charge/discharge manually.	• Charge • Discharge
Forced charge/discharge power (kW)	Specifies the forced charge/discharge power.	• Charge: [0, maximum charge power] • Discharge: [0, maximum discharge power]
Forced charge/discharge time (min)	Specifies the forced charge/discharge duration.	[0, 1440]
Remaining charge/discharge time (min)	It cannot be set, which means the remaining time of charge or discharge.	-

----End

Control Mode

Step 1 On the home screen, choose **Power adjustment** > **Battery control** > **Control mode** and perform the required operation. Tap **Submit**.

Figure 7-13 Fixed charge/discharge

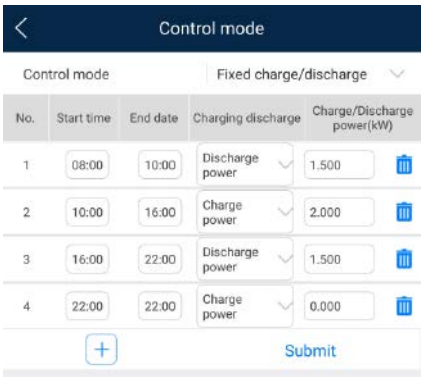

Figure 7-14 Maximum self-consumption

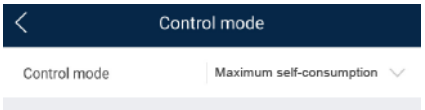

Figure 7-15 Time-of-use

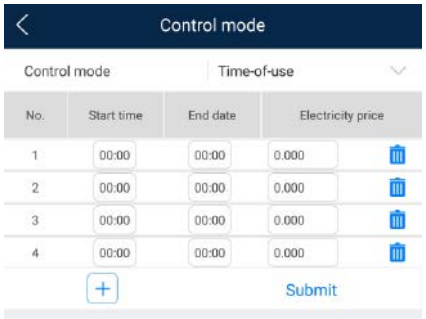

Table 7-3 Description of battery control parameters

Parameter	Description	Value Range
Control mode	• If this parameter is set to **Fixed charge/discharge**, the battery is charging or discharging during the configured period. A maximum of 10 time periods can be added. • If this parameter is set to **Maximum self-consumption** and the SUN2000 is connected to a smart power sensor, the SUN2000 provides output power for local loads before feeding the remaining power to the power grid. • If this parameter is set to **Time-of-use**, the battery is discharged when the electricity price is high and charged when the electricity price is low. A maximum of 10 time periods can be added.	• Fixed charge/discharge • Maximum self-consumption • Time-of-use

----End

Charge from grid

Step 1 On the home screen, choose **Power adjustment** > **Battery control** > **Charge from grid**.

Figure 7-16 Charge from grid

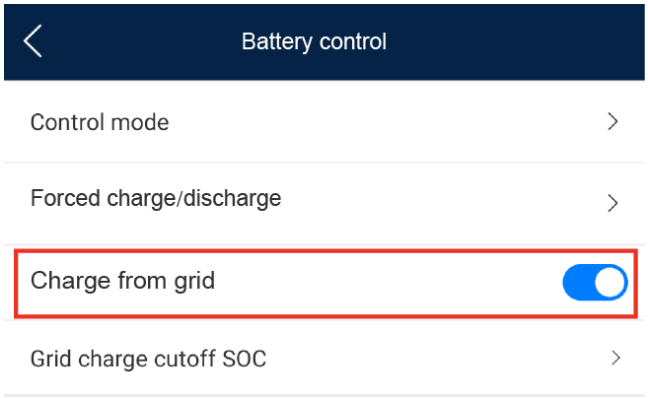

Figure 7-17 End-of-discharge capacity

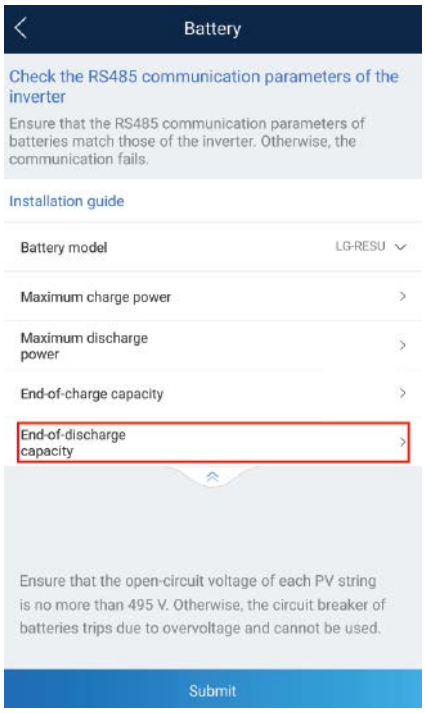

Table 7-4 Description of the grid charge parameter

Parameter	Description	Value Range
Charge from grid	• After **Charge from grid** is enabled: – When the battery capacity is 2% lower than the **End-of-discharge capacity**, the system forcibly charges batteries from the power grid. The charging power is limited to 1 kW. When the battery capacity is 2% higher than **End-of-discharge**	• Disable • Enable

Parameter	Description	Value Range
	capacity, the system stops charging batteries from the power grid. – Except the Maximum self-consumption control mode, if the PV power is less than the preset charge power, the system charges batteries from the power grid. The charge power is limited to 2 kW. When the battery capacity is higher than **Grid charge cutoff SOC**, the system stops charging batteries from the power grid. • To set the discharge cutoff capacity, choose **Maintenance** > **Add/Delete device** > **Battery** > **End-of-discharge capacity** on the home screen. The value range is 12%–20%, as shown in Figure 7-17. • If **Charge from grid** function is disabled by default, comply with the grid charge requirements stipulated in local laws and regulations when this function is enabled.	

----End

7.2.2 AFCI

Function

If PV modules or cables are not properly connected or damaged, electric arcs may occur, which may cause fire. Huawei SUN2000s provide unique arc detection in compliance with UL 1699B-2018 to ensure the safety of users' lives and property.

This function is enabled by default. The SUN2000 automatically detects arc faults. To disable this function, log in to the FusionSolar app, enter the **Device Commissioning** screen, choose **Settings** > **Feature parameters**, and disable **AFCI**.

For details about how to enter the **Device Commissioning** screen, see B Device Commissioning.

Clearing Alarms

The AFCI function involves the **DC arc fault** alarm.

The SUN2000 has the AFCI alarm automatic clearance mechanism. If an alarm is triggered for less than five times within 24 hours, the SUN2000 automatically clears the alarm. If the alarm is triggered for five times or more within 24 hours, the SUN2000 locks for protection. You need to manually clear the alarm on the SUN2000 so that it can work properly.

 Copyright © Huawei Technologies Co., Ltd.

You can manually clear the alarm as follows:

- **Method 1**: FusionSolar App

  Log in to the FusionSolar app and choose **My** > **Device Commissioning**. On the **Device Commissioning** screen, connect and log in to the SUN2000 that generates the AFCI alarm, tap **Alarm management**, and tap **Delete** on the right of the **DC arc fault** alarm to clear the alarm.

  Figure 7-18 Alarm management

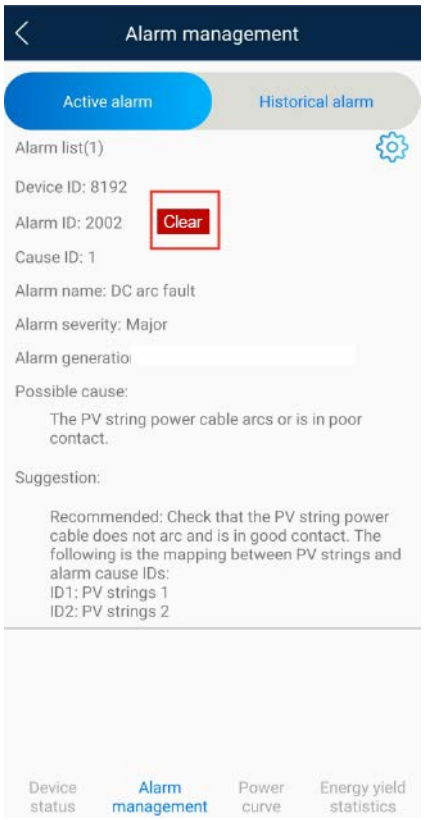

- **Method 2**: FusionSolar Smart PV Management System

  Log in to the FusionSolar Smart PV Management System using a non-owner account, choose **Intelligent O&M** > **Alarm Management**, select the **DC arc fault** alarm, and click **Clear** to clear the alarm.

Figure 7-19 Clearing alarms

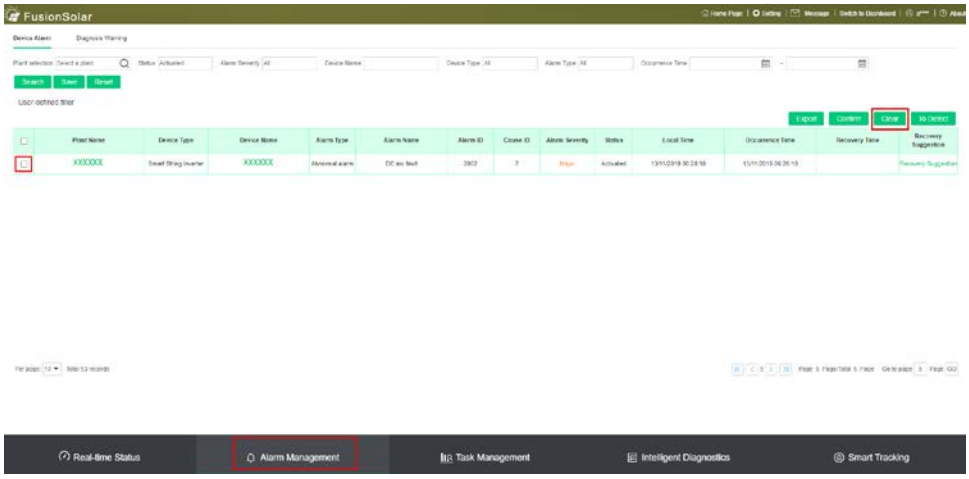

Switch to the owner account with PV plant management rights. On the home page, click the PV plant name to go to the PV plant page, and click **OK** as prompted to clear the alarm.

Figure 7-20 Owner confirmation

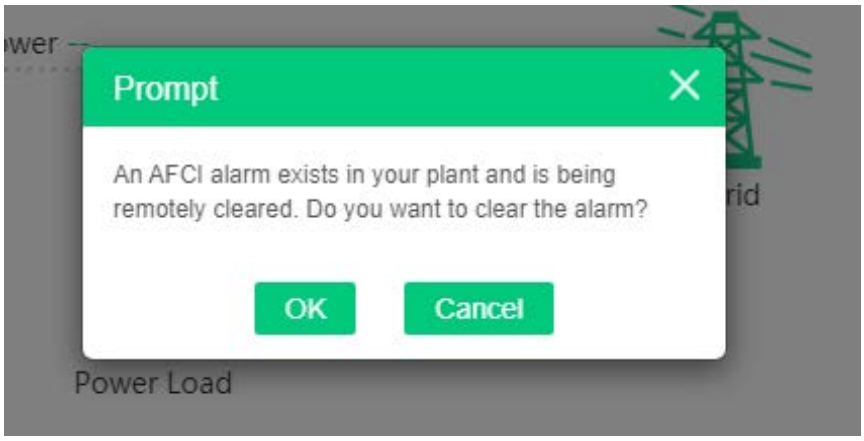

7.2.3 IPS Check (for Italy CEI0-21 Grid Code Only)

Function

The Italy CEI0-21 grid code requires an IPS check for the SUN2000. During the self-check, the SUN2000 checks the protection threshold and protection time of the maximum voltage over 10 min (59.S1), maximum overvoltage (59.S2), minimum undervoltage (27.S1), minimum undervoltage (27.S2), maximum overfrequency (81.S1), maximum overfrequency (81.S2), minimum underfrequency (81.S), and minimum underfrequency (81.S2).

Procedure

Step 1 On the home screen, choose **Maintenance** > **IPS test** to access the IPS test screen.

Step 2 Tap **Start** to start an IPS test. The SUN2000 detects maximum voltage over 10 min (59.S1), maximum overvoltage (59.S2), minimum undervoltage (27.S1), minimum undervoltage (27.S2), maximum overfrequency (81.S1), maximum overfrequency (81.S2), and minimum underfrequency (81.S1), and minimum underfrequency (81.S2).

Figure 7-21 IPS test

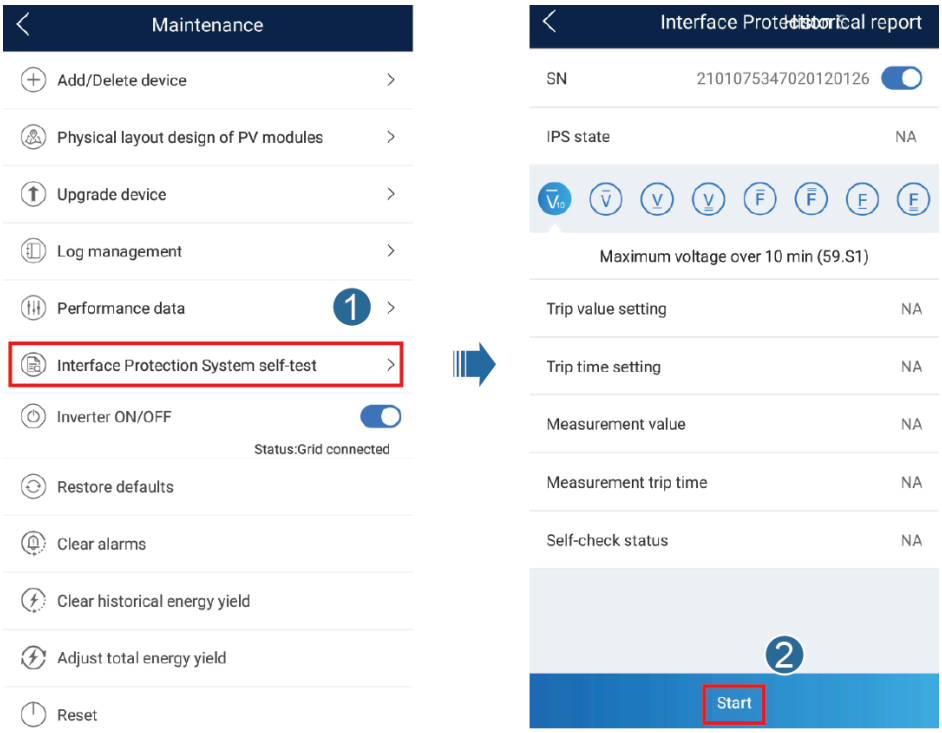

Table 7-5 IPS test type

IPS Test Type	Description
Maximum voltage over 10 min (59.S1)	The default maximum voltage over 10 min protection threshold is 253 V (1.10 Vn), and the default protection time threshold is 3s.
Maximum overvoltage (59.S2)	The default overvoltage protection threshold is 264.5 V (1.15 Vn), and the default protection time threshold is 0.2s.
Minimum undervoltage (27.S1)	The default undervoltage protection threshold is 195.5 V (0.85 Vn), and the default protection time threshold is 1.5s.
Minimum undervoltage (27.S2)	The default undervoltage protection threshold is 34.5 V (0.15 Vn), and the default protection time threshold is 0.2s.
Maximum overfrequency (81.S1)	The default overfrequency protection threshold is 50.2 Hz, and the default protection time threshold is 0.1s.
Maximum overfrequency	The default overfrequency protection threshold is 51.5 Hz, and the default protection time threshold is 0.1s.

 Copyright © Huawei Technologies Co., Ltd.

IPS Test Type	Description
(81.S2)	
Minimum underfrequency (81.S1)	The default underfrequency protection threshold is 49.8 Hz, and the default protection time threshold is 0.1s.
Minimum underfrequency (81.S2)	The default underfrequency protection threshold is 47.5 Hz, and the default protection time threshold is 0.1s.

Step 3 After the IPS test is complete, **IPS State** is displayed as **IPS state success**. Tap **Historical report** in the upper right corner of the screen to view the IPS check report.

----End

7.3 SmartLogger Networking Scenario

See the *Distributed PV Plants Connecting to Huawei Hosting Cloud Quick Guide (Distributed Inverters + SmartLogger1000A + RS485 Networking)* and *PV Plants Connecting to Huawei Hosting Cloud Quick Guide (Inverters + SmartLogger3000 + RS485 Networking)*. You can scan the QR code to obtain it.

Figure 7-22 SmartLogger1000A

Figure 7-23 SmartLogger3000

8 Maintenance

8.1 SUN2000 Power-Off

Important Notes

WARNING

- After the SUN2000 powers off, the remaining electricity and heat may still cause electric shocks and body burns. Therefore, put on protective gloves and begin operating the SUN2000 five minutes after the power-off.
- Before maintaining the optimizer and PV string, turn off the AC switch and DC switch. Otherwise, electric shocks may occur as the PV string is energized.

Procedure

Step 1 Turn off the AC switch between the SUN2000 and the power grid.

Step 2 Turn off the DC switch at the bottom of the SUN2000.

Step 3 (Optional) Install the locking screw beside the DC switch.

Figure 8-1

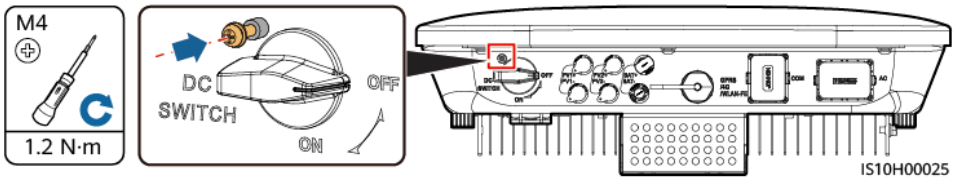

Step 4 Turn on the DC switch between the PV string and the SUN2000 if there is any.

Step 5 (Optional) Turn off the battery switch between the SUN2000 and batteries.

----End

8.2 Routine Maintenance

To ensure that the SUN2000 can operate properly for a long term, you are advised to perform routine maintenance on it as described in this chapter.

CAUTION

Before cleaning the system, connecting cables, and maintaining the grounding reliability, power off the system.

Table 8-1 Maintenance list

Check Detail	Check Method	Maintenance Interval
System cleanliness	Check the heat sink for foreign matter or the overall health of the SUN2000.	Annual or every time an abnormality is detected
System running status	Check the SUN2000 for damage or deformation.	Annual
Electrical connections	• Cables are securely connected. • Cables are intact, in particular, the parts touching the metallic surface are not scratched.	The first inspection is 6 months after the initial commissioning. From then on, the interval can be 6 to 12 months.
Grounding reliability	Check whether the ground terminal and ground cable are securely connected.	Annual
Sealing	Check whether all terminals and ports are properly sealed.	Annual

8.3 Troubleshooting

Alarm severities are defined as follows:

- Major: The SUN2000 is faulty. As a result, the output power decreases or the grid-tied power generation is stopped.
- Minor: Some components are faulty without affecting the grid-tied power generation.
- Warning: The SUN2000 works properly. The output power decreases or some authorization functions fail due to external factors.

Table 8-2 Common fault alarm list

ID	Name	Severity	Cause	Solution
2001	High string input	Major	The PV array is not properly configured. Excessive PV modules are connected in series to the PV string;	Reduce the number of PV modules connected in series to the PV string until the PV string open-circuit voltage is less than or equal to the

 Copyright © Huawei Technologies Co., Ltd.

ID	Name	Severity	Cause	Solution
	voltage		therefore the PV string open-circuit voltage exceeds the maximum SUN2000 operating voltage. Cause ID 1 or 2: PV strings 1 and 2	maximum SUN2000 operating voltage. After the PV string configuration is corrected, the alarm disappears.
2002	DC arc fault	Major	The PV string power cables arc or are in poor contact. • Cause ID 1 = PV1 • Cause ID 2 = PV2	Check whether the PV string cables arc or are in poor contact.
2003	DC arc fault	Major	The PV string power cables arc or are in poor contact. • Cause ID 1 = PV1 • Cause ID 2 = PV2	Check whether the PV string cables arc or are in poor contact.
2011	String reverse connection	Major	The PV string polarity is reversed. • Cause ID 1 = PV1 • Cause ID 2 = PV2	Check whether the PV string is reversely connected to the SUN2000. If so, wait until the PV string current decreases to below 0.5 A. Then, turn off the DC switch and correct the PV string polarity.
2012	String current backfeed	Warning	The number of PV modules connected in series to the PV string is insufficient. As a result, the end voltage is lower than that of other strings. • Cause ID 1 = PV1 • Cause ID 2 = PV2	1. Check whether the number of PV modules connected in series to this PV string is less than that of the other PV strings connected in parallel. If so, wait until the PV string current decreases to below 0.5 A. Then, turn off the DC switch and adjust the number of PV modules in the PV string. 2. Check whether the PV string is shaded. 3. Check whether the open-circuit voltage of the PV string is abnormal.
2021	AFCI self-check failure	Major	Cause ID = 1, 2 The AFCI self-check fails.	Turn off the AC output switch and DC input switch, and then turn them on after 5 minutes. If the alarm persists, contact your dealer or Huawei technical support.
2031	Phase wire short-circuited to PE	Major	Cause ID = 1 The impedance of the output phase wire to PE is low or the output phase wire is short-circuited to PE.	Check the impedance of the output phase wire to PE, locate the position with low impedance, and rectify the fault.
2032	Grid loss	Major	Cause ID = 1 • Power grid outage occurs.	• The alarm is cleared automatically after the power grid

ID	Name	Severity	Cause	Solution
			• The AC circuit is disconnected or the AC switch is off.	recovers. • Check whether the AC circuit is disconnected or the AC switch is off.
2033	Grid undervoltage	Major	Cause ID = 1 The grid voltage is below the lower threshold or the low-voltage duration has lasted for more than the value specified by low voltage ride-through (LVRT).	1. If the alarm occurs occasionally, the power grid may be abnormal temporarily. The SUN2000 automatically recovers after detecting that the power grid becomes normal. 2. If the alarm persists, check whether the power grid voltage is within the acceptable range. If not, contact the local power operator. If yes, modify the grid undervoltage protection threshold through the mobile app, SmartLogger, or network management system (NMS) with the consent of the local power operator. 3. If the alarm persists for a long time, check the connection between the AC circuit breaker and the output power cable.
2034	Grid overvoltage	Major	Cause ID = 1 The grid voltage exceeds the upper threshold or the high voltage duration has lasted for more than the value specified by high voltage ride-through (HVRT).	1. If the alarm occurs occasionally, the power grid may be abnormal temporarily. The SUN2000 automatically recovers after detecting that the power grid becomes normal. 2. If the alarm persists, check whether the power grid voltage is within the acceptable range. If not, contact the local power operator. If yes, modify the grid overvoltage protection threshold through the mobile app, SmartLogger, or NMS with the consent of the local power operator. 3. Check whether the peak voltage of the power grid is too high. If the alarm persists and cannot be rectified for a long time, contact the power operator.
2035	Grid volt. Imbalance	Major	Cause ID = 1 The difference between grid phase voltages exceeds the upper threshold.	1. If the alarm occurs occasionally, the power grid may be abnormal temporarily. The SUN2000 automatically recovers after detecting that the power grid

ID	Name	Severity	Cause	Solution
				becomes normal. 2. If the alarm persists, check whether the power grid voltage is within the acceptable range. If not, contact the local power operator. 3. If the alarm lasts for a long time, check the AC output power cable connection. 4. If the AC output power cable is correctly connected, yet the alarm persists and affects the energy yield of the PV plant, contact the local power operator.
2036	Grid overfrequency	Major	Cause ID = 1 Power grid exception: The actual power grid frequency is higher than the requirements for the local power grid code.	1. If the alarm occurs occasionally, the power grid may be abnormal temporarily. The SUN2000 automatically recovers after detecting that the power grid becomes normal. 2. If the alarm persists, check whether the power grid frequency is within the acceptable range. If not, contact the local power operator. If yes, modify the grid overfrequency protection threshold through the app, SmartLogger, or NMS with the consent of the local power operator.
2037	Grid underfrequency	Major	Cause ID = 1 Power grid exception: The actual power grid frequency is lower than the requirements for the local power grid code.	1. If the alarm occurs occasionally, the power grid may be abnormal temporarily. The SUN2000 automatically recovers after detecting that the power grid becomes normal. 2. If the alarm persists, check whether the power grid frequency is within the acceptable range. If not, contact the local power operator. If yes, modify the grid underfrequency protection threshold through the app, SmartLogger, or NMS with the consent of the local power operator.
2038	Unstable grid frequency	Major	Cause ID = 1 Power grid exception: The actual change rate of the power grid frequency does not meet the requirements for the local	1. If the alarm occurs occasionally, the power grid may be abnormal temporarily. The SUN2000 automatically recovers after detecting that the power grid

ID	Name	Severity	Cause	Solution
			power grid code.	becomes normal. 2. If the alarm persists, check whether the power grid frequency is within the acceptable range. If not, contact the local power operator.
2039	Output overcurren t	Major	Cause ID = 1 The power grid voltage drops dramatically or the power grid is short-circuited. As a result, the SUN2000 transient output current exceeds the upper threshold, and protection is triggered.	1. The SUN2000 monitors its external operating conditions in real time and automatically recovers after the fault is rectified. 2. If the alarm persists and affects the energy yield of the power plant, check whether the output is short-circuited. If the fault persists, contact your dealer or Huawei technical support.
2040	Output DC component overhigh	Major	Cause ID = 1 The DC component in the power grid current exceeds the upper threshold.	1. The SUN2000 monitors its external operating conditions in real time and automatically recovers after the fault is rectified. 2. If the alarm persists, contact your dealer or Huawei technical support.
2051	Abnormal residual current	Major	Cause ID = 1 The input-to-ground insulation impedance has decreased during the SUN2000 operation.	1. If the alarm occurs accidentally, the external power cable may be abnormal temporarily. The SUN2000 automatically recovers after the fault is rectified. 2. If the alarm persists or lasts a long time, check whether the impedance between the PV string and ground is too low.
2061	Abnormal grounding	Major	Cause ID = 1 • The neutral wire or PE cable of the inverter is not connected. • The output mode set for the inverter is inconsistent with the cable connection mode.	Power off the inverter (turn off the AC output switch and DC input switch, and wait for a period of time. For details about the wait time, see the description on the device safety warning label), and then perform the following operations: • Check whether the PE cable for the inverter is connected properly. • If the inverter is connected to a TN power grid, check whether the neutral wire is properly connected and whether the voltage of the neutral wire to ground is normal.

ID	Name	Severity	Cause	Solution
				• After the inverter is powered on, check whether the output mode set for the inverter is consistent with the output cable connection mode.
2062	Low insulation resistance	Major	Cause ID = 1 • A short circuit exists between the PV array and the ground. • The PV array is in a moist environment and the circuit is not well insulated to the ground.	1. Check the impedance between the PV array output and the ground. If a short circuit occurs or the insulation is insufficient, rectify the fault. 2. Check whether the PE cable of the SUN2000 is correctly connected. 3. If you have confirmed that the impedance is lower than the specified protection threshold in a cloudy or rainy environment, log in to the app, SmartLogger, or NMS and set the **Insulation resistance protection** threshold.
2063	Cabinet overtemperature	Minor	Cause ID = 1 • The SUN2000 is installed in a place with poor ventilation. • The ambient temperature exceeds the upper threshold. • The SUN2000 is not operating properly.	• Check the ventilation and ambient temperature at the SUN2000 installation position. • If the ventilation is poor or the ambient temperature exceeds the upper threshold, improve the ventilation and heat dissipation. • If the ventilation and ambient temperature are normal, contact your dealer or Huawei technical support.
2064	Equipment fault	Major	Cause ID = 1–12 An unrecoverable fault occurs on a circuit inside the SUN2000.	Turn off the AC output switch and DC input switch, and then turn them on after 5 minutes. If the alarm persists, contact your dealer or Huawei technical support.
2065	Upgrade failed or version mismatch	Minor	Cause ID = 1–6 The upgrade is not completed normally.	1. Perform an upgrade again. 2. If the upgrade fails several times, contact your dealer or Huawei technical support.
2066	License expired	Warning	Cause ID = 1 • The privilege license has entered the grace period. • The privilege feature is about to expire.	1. Apply for a new license. 2. Load a new certificate.
2068	Battery abnormal	Minor	Cause ID = 1–4 • The battery is faulty.	• If the fault indicator on the battery is steady on or blinking,

 Copyright © Huawei Technologies Co., Ltd.

ID	Name	Severity	Cause	Solution
			• The battery is disconnected. • The battery switch trips when the inverter is operating.	contact the battery dealer. • Check whether the battery enabling, power, and communications cable connections are correct, and whether the communications parameters are consistent with the RS485 configurations of the inverter. • Check whether the battery auxiliary power switch is turned on.
61440	Faulty monitoring unit	Minor	Cause ID = 1 • The flash memory is insufficient. • The flash memory has bad sectors.	Turn off the AC output switch and DC input switch, and then turn them on after 5 minutes. If the alarm persists, replace the monitoring board or contact your dealer or Huawei technical support.
2072	Transient AC overvoltage	Major	Cause ID = 1 The SUN2000 detects that the phase voltage exceeds the transient AC overvoltage protection threshold.	1. If the voltage at the grid connection point is too high, contact the local power operator. 2. If you have confirmed that the voltage at the grid connection point exceeds the upper threshold and obtained consent from the local power operator, modify the overvoltage protection thresholds. 3. Check whether the peak grid voltage exceeds the upper threshold.
2080	Abnormal PV module configuration	Major	• Cause ID = 1 The number of optimizers connected to the inverter exceeds the upper threshold. • Cause ID = 2 The PV string power or the number of optimizers connected in series in a PV string exceeds the upper threshold. • Cause ID = 3 The number of optimizers connected in series in a PV string is less than the lower threshold, the PV string output is reversely connected, or the output of some optimizers in the PV	Check whether the total number of PV modules, number of PV modules in a PV string, and number of PV strings meet requirements and whether the PV module output is reversely connected. • Cause ID 1: Check whether the total number of optimizers exceeds the upper threshold. • Cause ID 2: Check whether the PV string power or the number of PV strings connected in series exceeds the upper threshold. • Cause ID 3: 1. Check whether the number of optimizers connected in series in the PV string is below the lower threshold. 2. Check whether the PV string

ID	Name	Severity	Cause	Solution
			string is reversely connected. • Cause ID = 4 The number of PV strings connected to the inverter exceeds the upper threshold. • Cause ID = 5 The PV string output is reversely connected or the PV string output is short-circuited. • Cause ID = 6 Under the same MPPT, the number of optimizers connected in series in PV strings connected in parallel is different, or the output of some optimizers in PV strings is reversely connected. • Cause ID = 7 The optimizer installation position is changed, or PV strings are combined or exchanged. • Cause ID = 8 The sunlight is weak or changes abnormally. • Cause ID = 9 In partial configuration scenarios, the PV string voltage exceeds the inverter input voltage specifications.	output is reversely connected. 3. Check whether the PV string output is disconnected. 4. Check whether the optimizer output extension cable is correct (positive connector at one end and negative connector at the other). • Cause ID 4: Check whether the number of PV strings exceeds the upper threshold. • Cause ID 5: Check whether the PV string output is reversely connected or short-circuited. • Cause ID 6: 1. Check whether the number of optimizers connected in series in the PV strings connected in parallel under the same MPPT is the same. 2. Check whether the optimizer output extension cable is correct (positive connector at one end and negative connector at the other). • Cause ID 7: When the sunlight is normal, perform the optimizer search function again. • Cause ID 8: When the sunlight is normal, perform the optimizer search function again. • Cause ID 9: Calculate the PV string voltage based on the number of PV modules in the string and check whether the string voltage exceeds the upper threshold of the inverter input voltage.
2081	Optimizer fault	Warning	Cause ID = 1 The optimizer is offline or faulty.	Go to the optimizer information screen to view the fault details.

NOTE

Contact your dealer or Huawei technical support if all troubleshooting procedures listed above are completed and the fault still exists.

9 Handling the Inverter

9.1 Removing the SUN2000

NOTICE

Before removing the SUN2000, disconnect both AC and DC connections.

Perform the following operations to remove the SUN2000:

1. Disconnect all cables from the SUN2000, including RS485 communications cables, DC input power cables, AC output power cables, and PGND cables.
2. Remove the SUN2000 from the mounting bracket.
3. Remove the mounting bracket.

9.2 Packing the SUN2000

- If the original packing materials are available, put the SUN2000 inside them and then seal them by using adhesive tape.
- If the original packing materials are not available, put the SUN2000 inside a suitable cardboard box and seal it properly.

9.3 Disposing of the SUN2000

If the SUN2000 service life expires, dispose of it according to the local disposal rules for electrical equipment waste.

 Copyright © Huawei Technologies Co., Ltd.

10 Technical Specifications

10.1 SUN2000 Technical Specifications

Efficiency

Technical Specifications	SUN2000-3KTL-M1	SUN2000-4KTL-M1	SUN2000-5KTL-M1	SUN2000-6KTL-M1	SUN2000-8KTL-M1	SUN2000-10KTL-M1
Maximum efficiency	98.2%	98.3%	98.4%	98.6%	98.6%	98.6%
European efficiency	96.7%	97.1%	97.5%	97.7%	98.0%	98.1%

Input

Technical Specifications	SUN2000-3KTL-M1	SUN2000-4KTL-M1	SUN2000-5KTL-M1	SUN2000-6KTL-M1	SUN2000-8KTL-M1	SUN2000-10KTL-M1
Maximum input voltage[a]	1100 V	1100 V	1100 V	1100 V	1100 V	1100 V
Maximum input current (per MPPT)	11 A	11 A	11 A	11 A	11 A	11 A
Maximum short-circuit current (per MPPT)	15 A	15 A	15 A	15 A	15 A	15 A
Minimum startup voltage	200 V	200 V	200 V	200 V	200 V	200 V

 Copyright © Huawei Technologies Co., Ltd.

Technical Specifications	SUN2000-3KTL-M1	SUN2000-4KTL-M1	SUN2000-5KTL-M1	SUN2000-6KTL-M1	SUN2000-8KTL-M1	SUN2000-10KTL-M1
MPP voltage range	140–980 V	140–980 V	140–980 V	140–980 V	140–980 V	140–980 V
Full-load MPPT voltage range	140–850 V DC	190–850 V DC	240–850 V DC	285–850 V DC	380–850 V DC	470–850 V DC
Rated input voltage	600 V	600 V	600 V	600 V	600 V	600 V
Maximum number of inputs	2	2	2	2	2	2
Number of MPPTs	2	2	2	2	2	2
Note a: The maximum input voltage is the maximum DC input voltage that the SUN2000 can withstand. If the input voltage exceeds this value, the SUN2000 may be damaged.						

Output

Technical Specifications	SUN2000-3KTL-M1	SUN2000-4KTL-M1	SUN2000-5KTL-M1	SUN2000-6KTL-M1	SUN2000-8KTL-M1	SUN2000-10KTL-M1
Rated output power	3000 W	4000 W	5000 W	6000 W	8000 W	10,000 W
Maximum apparent power	3300 VA	4400 VA	5500 VA	6600 VA	8800 VA	11,000 VA
Maximum active power (cosφ = 1)	3300 W	4400 W	5500 W	6600 W	8800 W	11,000 W
Rated output voltage	220 V/380 V, 230 V/400 V, 3W+N+PE	220 V/380 V, 230 V/400 V, 3W+N+PE	220 V/380 V, 230 V/400 V, 3W+N+PE	220 V/380 V, 230 V/400 V, 3W+N+PE	220 V/380 V, 230 V/400 V, 3W+N+PE	220 V/380 V, 230 V/400 V, 3W+N+PE
Maximum output voltage at long-term operation	See standards about the local power grid.	See standards about the local power grid.	See standards about the local power grid.	See standards about the local power grid.	See standards about the local power grid.	See standards about the local power grid.
Rated output current	4.6 A (380 V)/ 4.4 A (400 V)	6.1 A (380 V) /5.8 A (400 V)	7.6 A (380 V)/ 7.3 A (400 V)	9.1 A (380 V)/ 8.7 A (400 V)	12.2 A (380 V) /11.6 A (400 V)	15.2 A (380 V)/ 14.5 A (400 V)

 Copyright © Huawei Technologies Co., Ltd.

Technical Specifications	SUN2000-3KTL-M1	SUN2000-4KTL-M1	SUN2000-5KTL-M1	SUN2000-6KTL-M1	SUN2000-8KTL-M1	SUN2000-10KTL-M1
Maximum output current	5.1 A	6.8 A	8.5 A	10.1 A	13.5 A	16.9 A
Output voltage frequency	50 Hz/60 Hz	50 Hz/60 Hz	50 Hz/60 Hz	50 Hz/60 Hz	50 Hz/60 Hz	50 Hz/60 Hz
Power factor	0.8 leading–0.8 lagging	0.8 leading–0.8 lagging	0.8 leading–0.8 lagging	0.8 leading–0.8 lagging	0.8 leading–0.8 lagging	0.8 leading–0.8 lagging
Maximum total harmonic distortion (THD) AC THDi	< 3% under rated conditions. Single harmonic meets the VDE4105 requirements.	< 3% under rated conditions. Single harmonic meets the VDE4105 requirements.	< 3% under rated conditions. Single harmonic meets the VDE4105 requirements.	< 3% under rated conditions. Single harmonic meets the VDE4105 requirements.	< 3% under rated conditions. Single harmonic meets the VDE4105 requirements.	< 3% under rated conditions. Single harmonic meets the VDE4105 requirements.

Protection

Technical Specifications	SUN2000-3KTL-M1	SUN2000-4KTL-M1	SUN2000-5KTL-M1	SUN2000-6KTL-M1	SUN2000-8KTL-M1	SUN2000-10KTL-M1
Overvoltage category	PV II/AC III	PV II/AC III	PV II/AC III	PV II/AC III	PV II/AC III	PV II/AC III
Input DC switch	Supported	Supported	Supported	Supported	Supported	Supported
Islanding protection	Supported	Supported	Supported	Supported	Supported	Supported
Output overcurrent protection	Supported	Supported	Supported	Supported	Supported	Supported
Input reverse connection protection	Supported	Supported	Supported	Supported	Supported	Supported
PV string fault detection	Supported	Supported	Supported	Supported	Supported	Supported
DC surge protection	DC common mode: 10 kA	DC common mode: 10 kA	DC common mode: 10 kA	DC common mode: 10 kA	DC common mode: 10 kA	DC common mode: 10 kA

 Copyright © Huawei Technologies Co., Ltd.

Technical Specifications	SUN2000-3KTL-M1	SUN2000-4KTL-M1	SUN2000-5KTL-M1	SUN2000-6KTL-M1	SUN2000-8KTL-M1	SUN2000-10KTL-M1
AC surge protection	Common mode: 5 kA; differential mode: 5 kA	Common mode: 5 kA; differential mode: 5 kA	Common mode: 5 kA; differential mode: 5 kA	Common mode: 5 kA; differential mode: 5 kA	Common mode: 5 kA; differential mode: 5 kA	Common mode: 5 kA; differential mode: 5 kA
Insulation resistance detection	Supported	Supported	Supported	Supported	Supported	Supported
Residual current monitoring (RCMU)	Supported	Supported	Supported	Supported	Supported	Supported
AFCI	Supported (The European V200 optimizer is not supported.)	Supported (The European V200 optimizer is not supported.)	Supported (The European V200 optimizer is not supported.)	Supported (The European V200 optimizer is not supported.)	Supported (The European V200 optimizer is not supported.)	Supported (The European V200 optimizer is not supported.)
PV module safe shutdown, optimizer	Optional	Optional	Optional	Optional	Optional	Optional
PID repair	Optional	Optional	Optional	Optional	Optional	Optional

Display and Communication

Technical Specifications	SUN2000-3KTL-M1	SUN2000-4KTL-M1	SUN2000-5KTL-M1	SUN2000-6KTL-M1	SUN2000-8KTL-M1	SUN2000-10KTL-M1
Display	LED and WLAN+app	LED and WLAN+app	LED and WLAN+app	LED and WLAN+app	LED and WLAN+app	LED and WLAN+app
RS485	Supported	Supported	Supported	Supported	Supported	Supported
External expansion communication module	Supports WLAN, GPRS, and 4G.	Supports WLAN, GPRS, and 4G.	Supports WLAN, GPRS, and 4G.	Supports WLAN, GPRS, and 4G.	Supports WLAN, GPRS, and 4G.	Supports WLAN, GPRS, and 4G.
remote ripple control	Supported	Supported	Supported	Supported	Supported	Supported

 Copyright © Huawei Technologies Co., Ltd.

General Specifications

Technical Specifications	SUN2000-3KTL-M1	SUN2000-4KTL-M1	SUN2000-5KTL-M1	SUN2000-6KTL-M1	SUN2000-8KTL-M1	SUN2000-10KTL-M1
Dimensions (W x H x D, mm)	525 x 470 x 166 (including only the rear mounting kit of the SUN2000)	525 x 470 x 166 (including only the rear mounting kit of the SUN2000)	525 x 470 x 166 (including only the rear mounting kit of the SUN2000)	525 x 470 x 166 (including only the rear mounting kit of the SUN2000)	525 x 470 x 166 (including only the rear mounting kit of the SUN2000)	525 x 470 x 166 (including only the rear mounting kit of the SUN2000)
Weight	17 kg (including only the rear mounting kit of the SUN2000)	17 kg (including only the rear mounting kit of the SUN2000)	17 kg (including only the rear mounting kit of the SUN2000)	17 kg (including only the rear mounting kit of the SUN2000)	17 kg (including only the rear mounting kit of the SUN2000)	17 kg (including only the rear mounting kit of the SUN2000)
Noise	29 dB (A) (typical working condition)	29 dB (A) (typical working condition)	29 dB (A) (typical working condition)	29 dB (A) (typical working condition)	29 dB (A) (typical working condition)	29 dB (A) (typical working condition)
Operating temperature	–25°C to +60°C (derated when the temperature is higher than 45°C)	–25°C to +60°C (derated when the temperature is higher than 45°C)	–25°C to +60°C (derated when the temperature is higher than 45°C)	–25°C to +60°C (derated when the temperature is higher than 45°C)	–25°C to +60°C (derated when the temperature is higher than 45°C)	–25°C to +60°C (derated when the temperature is higher than 45°C)
Operating humidity	0–100% RH	0–100% RH	0–100% RH	0–100% RH	0–100% RH	0–100% RH
Cooling mode	Natural convection	Natural convection	Natural convection	Natural convection	Natural convection	Natural convection
Maximum operating altitude	4000 m (derated when the altitude is greater than 3000 m)	4000 m (derated when the altitude is greater than 3000 m)	4000 m (derated when the altitude is greater than 3000 m)	4000 m (derated when the altitude is greater than 3000 m)	4000 m (derated when the altitude is greater than 3000 m)	4000 m (derated when the altitude is greater than 3000 m)
Storage temperature	–40°C to +70°C	–40°C to +70°C	–40°C to +70°C	–40°C to +70°C	–40°C to +70°C	–40°C to +70°C
Storage humidity	5–95% RH (non-condensing)	5–95% RH (non-condensing)	5–95% RH (non-condensing)	5–95% RH (non-condensing)	5–95% RH (non-condensing)	5–95% RH (non-condensing)
Input terminal	HH4	HH4	HH4	HH4	HH4	HH4
Output	Waterproof	Waterproof	Waterproof	Waterproof	Waterproof	Waterproof

 Copyright © Huawei Technologies Co., Ltd.

Technical Specifications	SUN2000-3KTL-M1	SUN2000-4KTL-M1	SUN2000-5KTL-M1	SUN2000-6KTL-M1	SUN2000-8KTL-M1	SUN2000-10KTL-M1
terminal	quick-connect terminal	quick-connect terminal	quick-connect terminal	quick-connect terminal	quick-connect terminal	quick-connect terminal
IP rating	IP65	IP65	IP65	IP65	IP65	IP65
Topology	Transformerless	Transformerless	Transformerless	Transformerless	Transformerless	Transformerless
Environmental protection requirements	RoHS 6	RoHS 6	RoHS 6	RoHS 6	RoHS 6	RoHS 6

Standards Compliance

Technical Specifications	SUN2000-3KTL-M1	SUN2000-4KTL-M1	SUN2000-5KTL-M1	SUN2000-6KTL-M1	SUN2000-8KTL-M1	SUN2000-10KTL-M1
Criteria	EN/IEC 62109-1, EN/IEC 62109-2	EN/IEC 62109-1, EN/IEC 62109-2	EN/IEC 62109-1, EN/IEC 62109-2	EN/IEC 62109-1, EN/IEC 62109-2	EN/IEC 62109-1, EN/IEC 62109-2	EN/IEC 62109-1, EN/IEC 62109-2

10.2 Optimizer Technical Specifications

Efficiency

Technical Specifications	SUN2000-450W-P
Maximum efficiency	99.5%
European weighted efficiency	99.0%

Input

Technical Specifications	SUN2000-450W-P
Rated PV module power	450 W

 Copyright © Huawei Technologies Co., Ltd.

Technical Specifications	SUN2000-450W-P
Maximum PV module power	472.5 W
Maximum input voltage	80 V
MPPT voltage range	8–80 V
Maximum short-circuit current	13 A
Overvoltage level	II

Output

Technical Specifications	SUN2000-450W-P
Rated output power	450 W
Output voltage	4–80 V
Maximum output current	15 A
Output bypass	Yes
Shutdown output voltage/impedance	0 V/1 kΩ (±10%)

Common Parameters

Technical Specifications	SUN2000-450W-P
Dimensions (W x H x D)	71 mm x 138 mm x 25 mm
Net weight	≤ 550 g
DC input and output terminals	Staubli MC4
Operating temperature	–40°C to +85°C
Storage temperature	–40°C to +70°C
Operating humidity	0–100% RH
Maximum operating altitude	4000 m

 Copyright © Huawei Technologies Co., Ltd.

Technical Specifications	SUN2000-450W-P
IP rating	IP68
Installation mode	• PV module support installation • PV module frame installation

Long String Design (Full Optimizer Configuration)

Technical Specifications	SUN2000-3KTL-M1	SUN2000-4KTL-M1	SUN2000-5KTL-M1	SUN2000-6KTL-M1	SUN2000-8KTL-M1	SUN2000-10KTL-M1
Minimum optimizer number per string	6					
Maximum optimizer number per string	50					
Maximum DC power per string	10,000 W					

A Grid Code

NOTE

The grid codes are subject to change. The listed codes are for reference only.

Table A-1 Grid Code

No.	Grid Code	Remarks
1	VDE-AR-N-4105	Germany low-voltage (LV) power grid
2	UTE C 15-712-1(A)	France mainland power grid
3	UTE C 15-712-1(B)	France island power grid
4	UTE C 15-712-1(C)	France island power grid
5	VDE 0126-1-1-BU	Bulgaria power grid
6	VDE 0126-1-1-GR(A)	Greece mainland power grid
7	VDE 0126-1-1-GR(B)	Greece island power grid
8	G59-England	England 230 V power grid (I > 16 A)
9	G59-Scotland	Scotland 240 V power grid (I > 16 A)
10	G83-England	England 230 V power grid (I < 16 A)
11	G83-Scotland	Scotland 240 V power grid (I < 16 A)
12	CEI0-21	Italy power grid
13	EN50438-CZ	Czech power grid
14	RD1699/661	Spain LV power grid
15	EN50438-NL	Netherlands power grid
16	C10/11	Belgium power grid
17	AS4777	Australia power grid
18	IEC61727	IEC 61727 LV grid-tied power grid (50 Hz)

 Copyright © Huawei Technologies Co., Ltd.

No.	Grid Code	Remarks
19	Custom (50 Hz)	Reserved
20	Custom (60 Hz)	Reserved
21	CEI0-16	Italy power grid
22	TAI-PEA	Thailand grid-tied standard power grid
23	TAI-MEA	Thailand grid-tied standard power grid
24	EN50438-TR	Turkey LV power grid code
25	Philippines	Philippines LV power grid
26	NRS-097-2-1	South Africa standard power grid
27	KOREA	Korea power grid code
28	IEC61727-60Hz	IEC 61727 LV grid-tied power grid (60 Hz)
29	ANRE	Romania LV power grid
30	EN50438_IE	Ireland LV power grid
31	PO12.3	Spain LV power grid
32	Egypt ETEC	Egypt LV power grid
33	EN50549-LV	Ireland power grid
34	Jordan-Transmission	Jordan LV power grid
35	NAMIBIA	Namibia power grid
36	ABNT NBR 16149	Brazil power grid
37	SA_RPPs	South Africa LV power grid
38	INDIA	India LV power grid
39	ZAMBIA	Zambia LV power grid
40	Chile	Chile LV power grid
41	Malaysian	Malaysia LV power grid
42	KENYA_ETHIOPIA	Kenya LV and Ethiopia power grids
43	NIGERIA	Nigeria LV power grid
44	DUBAI	Dubai LV power grid
45	Northern Ireland	Northern Ireland LV power grid
46	Cameroon	Cameroon LV power grid
47	Jordan-Distribution	Jordan power distribution network LV power grid
48	LEBANON	Lebanon LV power grid

 Copyright © Huawei Technologies Co., Ltd.

No.	Grid Code	Remarks
49	TUNISIA	Tunisia power grid
50	AUSTRALIA-NER	Australia NER standard power grid
51	SAUDI	Saudi Arabia power grid
52	Israel	Israel power grid
53	Chile-PMGD	Chile PMGD project power grid
54	VDE-AR-N4120_HV	VDE4120 standard power grid
55	Vietnam	Vietnam power grid
56	TAIPOWER	Taiwan LV power grid
57	OMAN	Oman LV power grid
58	KUWAIT	Kuwait LV power grid
59	BANGLADESH	Bangladesh LV power grid
60	CHILE_NET_BILLING	Chile NetBilling project power grid
61	BAHRAIN	Bahrain LV power grid
62	Fuel_Engine_Grid	DG-grid hybrid power grid
63	Fuel-Engine-Grid-60Hz	DG-grid hybrid power grid
64	ARGENTINA	Argentina power grid
65	Mauritius	Mauritius power grid
66	EN50438-SE	Sweden LV power grid
67	Austria	Austria power grid
68	G98	UK G98 power grid
69	G99-TYPEA-LV	UK G99_TypeA_LV power grid
70	AS4777-WP	Australia power grid

 Copyright © Huawei Technologies Co., Ltd.

B Device Commissioning

Step 1 Access **Device Commissioning** screen.

Figure B-1 Method 1: before login (not connected to the Internet)

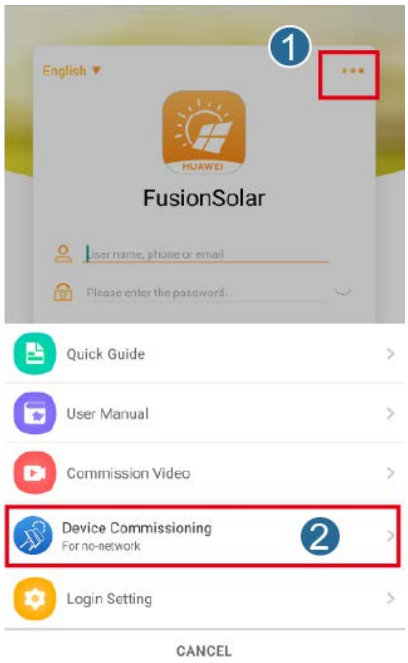

Figure B-2 Method 2: after login (connected to the Internet)

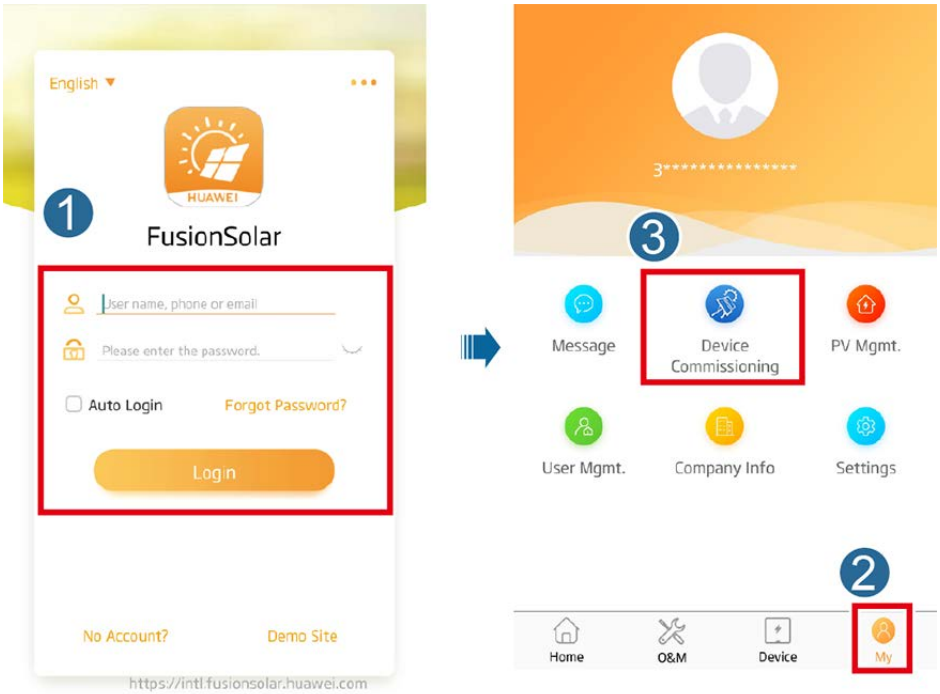

Step 2 Connect to the solar inverter WLAN and log in to the device commissioning screen as the **installer** user.

NOTICE

- If the mobile phone is directly connected to the SUN2000, the visible distance between the SUN2000 and the mobile phone must be less than 3 m when a built-in antenna is used and less than 50 m when an external antenna is used to ensure the communication quality between the app and the SUN2000. The distances are for reference only and may vary with mobile phones and shielding conditions.
- When connecting the SUN2000 to the WLAN over a router, ensure that the mobile phone and SUN2000 are in the WLAN coverage of the router and the SUN2000 is connected to the router.
- The router supports WLAN (IEEE 802.11 b/g/n, 2.4 GHz) and the WLAN signal reaches the SUN2000.
- The WPA, WPA2, or WPA/WPA2 encryption mode is recommended for routers. Enterprise-level encryption is not supported (for example, public hotspots requiring authentication such as airport WLAN). WEP and WPA TKIP are not recommended because these two encryption modes have serious security defects. If the access fails in WEP mode, log in to the router and change the encryption mode of the router to WPA2 or WPA/WPA2.

NOTE

- Obtain the initial password for connecting to the solar inverter WLAN from the label on the side of the solar inverter.

- USet the password at the first login. To ensure account security, change the password periodically and keep the new password in mind. Not changing the initial password may cause password disclosure. A password left unchanged for a long period of time may be stolen or cracked. If a password is lost, devices cannot be accessed. In these cases, the user is liable for any loss caused to the PV plant.
- When you access the **Device Commissioning** screen of the SUN2000 for the first time, you need to manually set the login password because the SUN2000 does not have an initial login password.

Figure B-3 Quick settings

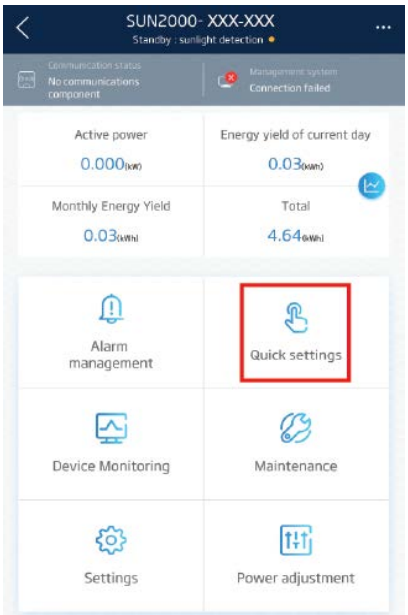

----End

C Resetting Password

Step 1 Ensure that the SUN2000 connects to the AC and DC power supplies at the same time. Indicators and are steady green or blink at long intervals for more than 3 minutes.

Step 2 Perform the following operations within 3 minutes:

1. Turn off the AC switch and set the DC switch at the bottom of the SUN2000 to OFF. If the SUN2000 connects to batteries, turn off the battery switch. Wait until all the LED indicators on the SUN2000 panel turn off.
2. Turn on the AC switch and set the DC switch to ON. Ensure that the indicator is blinking green at long intervals.
3. Turn off the AC switch and set the DC switch to OFF. Wait until all LED indicators on the SUN2000 panel are off.
4. Turn on the AC switch and set the DC switch to ON. Wait until all indicators on the solar inverter panel blink and turn off 30 seconds later.

Step 3 Reset the password within 10 minutes. (If no operation is performed within 10 minutes, all inverter parameters remain unchanged.)

1. Wait until the indicator blinks green at long intervals.
2. Obtain the initial WLAN hotspot name (SSID) and initial password (PSW) from the label on the side of the SUN2000 and connect to the app.
3. On the login screen, set a new login password and log in to the app.

 Copyright © Huawei Technologies Co., Ltd.

Figure C-1 Setting the password

Step 4 Set router and management system parameters to implement remote management.

- Setting router parameters

  Log in to the FusionSolar app, choose **Device Commissioning** > **Settings** > **Communication configuration** > **Router connection settings**, and set router parameters.

  Figure C-2 Setting router parameters

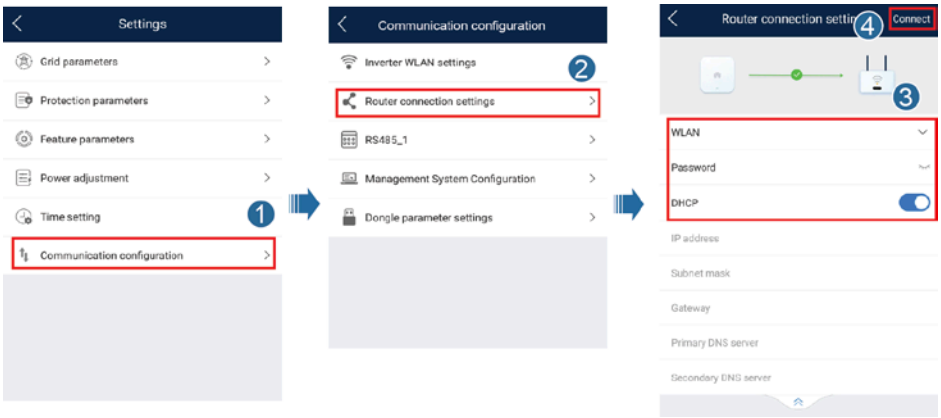

- Setting management system parameters

  Log in to the FusionSolar app, choose **Device Commissioning** > **Settings** > **Communication configuration** > **Management System Configuration**, and set management system parameters.

Figure C-3 Setting management system parameters

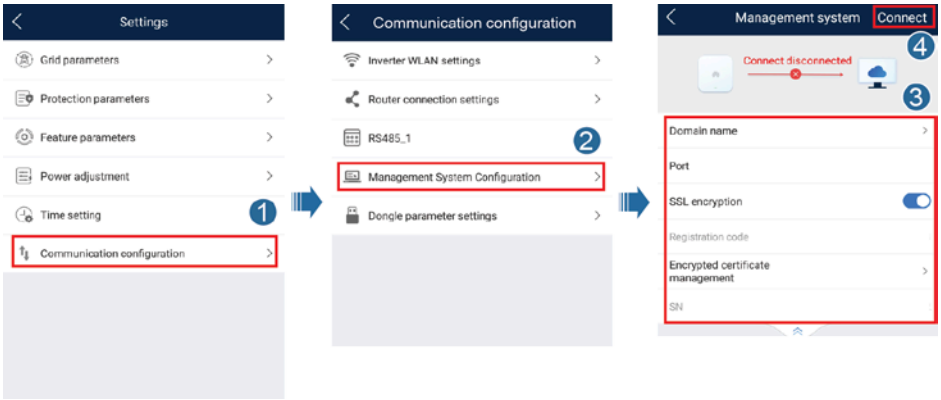

- (Optional) Resetting the WLAN password

  Log in to the FusionSolar app, choose **Device Commissioning** > **Settings** > **Communication configuration** > **Inverter WLAN settings**, and reset the WLAN password.

Figure C-4 Resetting the WLAN password

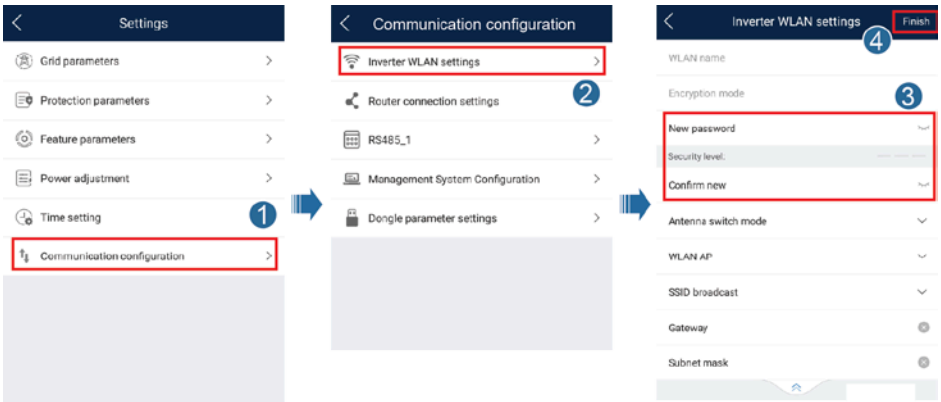

----End

Copyright © Huawei Technologies Co., Ltd.

D Rapid Shutdown

NOTE

- If optimizers are configured for some PV modules, the rapid shutdown function is not supported.
- You are advised to periodically check whether the rapid shutdown function is normal.

When all PV modules connected to the solar inverter are configured with optimizers, the PV system shuts down quickly and reduces the output voltage of the PV string to below 30 V within 30 seconds.

Perform the following step to trigger rapid shutdown:

- Method 1: Turn off the AC switch between the solar inverter and the power grid.
- Method 2: Set the DC switch at the bottom of the SUN2000 to OFF. (Turning off an extra switch on the DC side of the SUN2000 will not trigger rapid shutdown. The PV string may be energized.)
- Method 3: To enable the rapid shutdown function, you need to connect the access switch to pins 13 and 15. The switch is closed by default. The rapid shutdown is triggered when the switch changes from closed to open.

 Copyright © Huawei Technologies Co., Ltd.

E Locating Insulation Resistance Faults

If the ground resistance of a PV string connected to a solar inverter is too low, the solar inverter generates a **Low Insulation Resistance** alarm.

The possible causes are as follows:

- A short circuit occurs between the PV array and the ground.
- The ambient air of the PV array is damp and the insulation between the PV array and the ground is poor.

To locate the fault, connect each PV strings to a solar inverter, power on and check the solar inverter, and locate the fault based on the alarm information reported by the FusionSolar app. If a system is not configured with any optimizer, skip the corresponding operations. Perform the following steps to locate an insulation resistance fault.

NOTICE

If two or more ground insulation faults occur in a single PV string, the following method cannot locate the fault. You need to check the PV modules one by one.

Step 1 The AC power supply is connected, and set the DC switch at the bottom of the solar inverter to OFF. If the solar inverter connects to batteries, wait for 1 minute, and turn off the the battery switch and then the auxiliary power switch of the battery.

Step 2 Connect each PV string to the solar inverter and set the DC switch to ON. If the solar inverter status is **Shutdown: Command**, choose **Device Commissioning** > **Maintenance** > **Inverter ON/OFF** on the app and send a startup command.

Step 3 Log in to the FusionSolar app and choose **My** > **Device Commissioning**. On the **Device Commissioning** screen, connect and log in to the solar inverter, and access the **Alarm management** screen. Check whether the **Low Insulation Resistance** alarm is reported.

- If the **Low Insulation Resistance** alarm is not reported one minute after the DC is supplied, choose **Device Commissioning** > **Maintenance** > **Inverter ON/OFF** on the app and send a shutdown command. Set the DC switch to OFF and go to Step 2 to connect another PV string to the solar inverter for a check.
- If a **Low Insulation Resistance** alarm is still reported one minute after the DC is supplied, check the percentage for possible short-circuit positions on the **Alarm details** page and go to Step 4.

 Copyright © Huawei Technologies Co., Ltd.

Figure E-1 Alarm details

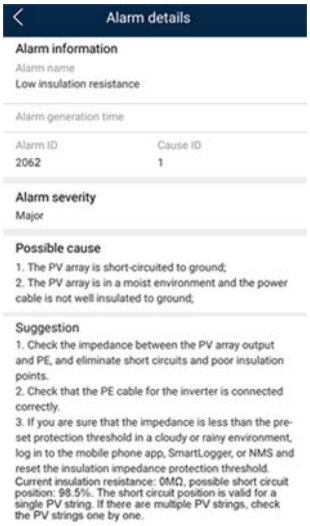

NOTE

- The positive and negative terminals of a PV string are connected to the PV+ and PV– terminals of the solar inverter. The PV– terminal represents a possibility of 0% for the short-circuit position and the PV+ terminal represents a possibility of 100% for the short-circuit position. Other percentages indicate that the fault occurs on a PV module or cable in the PV string.
- Possible fault position = Total number of PV modules in a PV string x Percentage of possible short-circuit positions. For example, if a PV string consists of 14 PV modules and the percentage of the possible short-circuit position is 34%, the possible fault position is 4.76 (14 x 34%), indicating that the fault is located near PV module 4, including the previous and the next PV modules and the cables of PV module 4. The solar inverter has a detection precision of ±1 PV module.

Figure E-2 Definition of the percentage of the short-circuit position

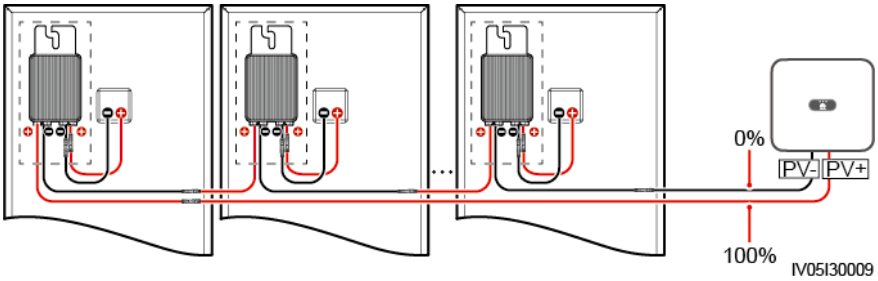

Step 4 Set the DC switch to OFF and check whether the connector or DC cable between the possible faulty PV modules and the corresponding optimizers, or those between the adjacent PV modules and the corresponding optimizers are damaged.

- If yes, replace the damaged connector or DC cable, set the DC switch to ON, and view the alarm information.
  - If the **Low Insulation Resistance** alarm is not reported one minute after the DC is supplied, the inspection on the PV string is complete. Choose **Device Commissioning** > **Maintenance** > **Inverter ON/OFF** on the app and send a shutdown command. Set the DC switch to OFF. Go to Step 2 to check other PV strings. Then go to Step 8.

Copyright © Huawei Technologies Co., Ltd.

  - If the **Low Insulation Resistance** alarm is still reported one minute after the DC is supplied, go to Step 5.
- If not, go to Step 5.

Step 5 Set the DC switch to OFF, disconnect the possible faulty PV modules and corresponding optimizers from the PV string, and connect a DC extension cable with an MC4 connector to the adjacent PV modules or optimizers. Set the DC switch to ON and view the alarm information.

- If the **Low Insulation Resistance** alarm is not reported one minute after the DC is supplied, the fault occurs on the disconnected PV module and optimizer. Choose **Device Commissioning** > **Maintenance** > **Inverter ON/OFF** on the app and send a shutdown command. Go to Step 7.
- If the **Low Insulation Resistance** alarm is still reported one minute after the DC is supplied, the fault does not occur on the disconnected PV module or optimizer. Go to Step 6.

Step 6 Set the DC switch to OFF, reconnect the removed PV module and optimizer, and repeat Step 5 to check the adjacent PV modules and optimizers.

Step 7 Determine the position of the ground insulation fault.

1. Disconnect the possible faulty PV module from the optimizer.
2. Set the DC switch to OFF.
3. Connect the possible faulty optimizer to the PV string.
4. Set the DC switch to ON. If the solar inverter status is **Shutdown: Command**, choose **Device Commissioning** > **Maintenance** > **Inverter ON/OFF** on the app and send a startup command. Check whether the **Low Insulation Resistance** alarm is reported.
   - If the **Low Insulation Resistance** alarm is not reported one minute after the solar inverter is powered on, the PV module is faulty. Choose **Device Commissioning** > **Maintenance** > **Inverter ON/OFF** on the app and send a shutdown command.
   - If the **Low Insulation Resistance** alarm is still reported one minute after the solar inverter is powered on, the optimizer is faulty.
5. Set the DC switch to OFF. Replace the faulty component to rectify the insulation resistance fault. Go to Step 2 to check other PV strings. Then go to Step 8.

Step 8 If the solar inverter connects to batteries, turn on the auxiliary power switch of the battery and then the battery switch. Set the DC switch to ON. If the solar inverter status is **Shutdown: Command**, choose **Device Commissioning** > **Maintenance** > **Inverter ON/OFF** on the app and send a startup command.

----End

 Copyright © Huawei Technologies Co., Ltd.

F Acronyms and Abbreviations

L	
LED	light emitting diode
M	
MPP	maximum power point
MPPT	maximum power point tracking
P	
PV	photovoltaic

 Copyright © Huawei Technologies Co., Ltd.