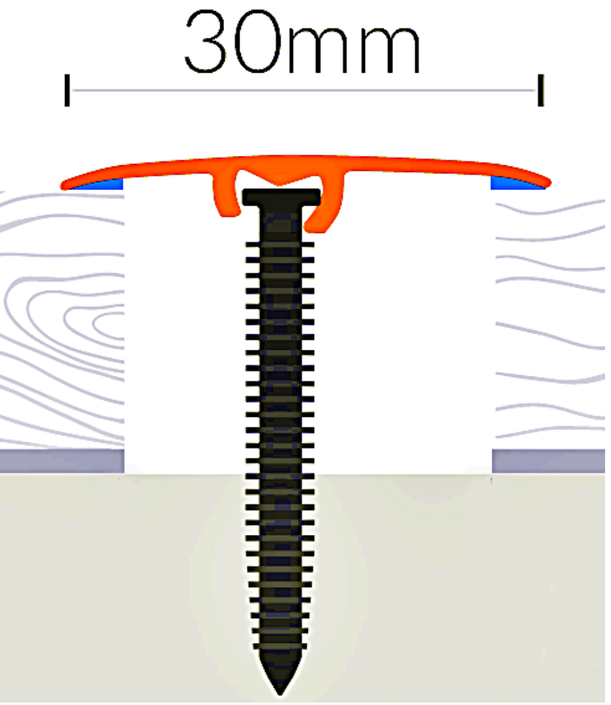
30mm

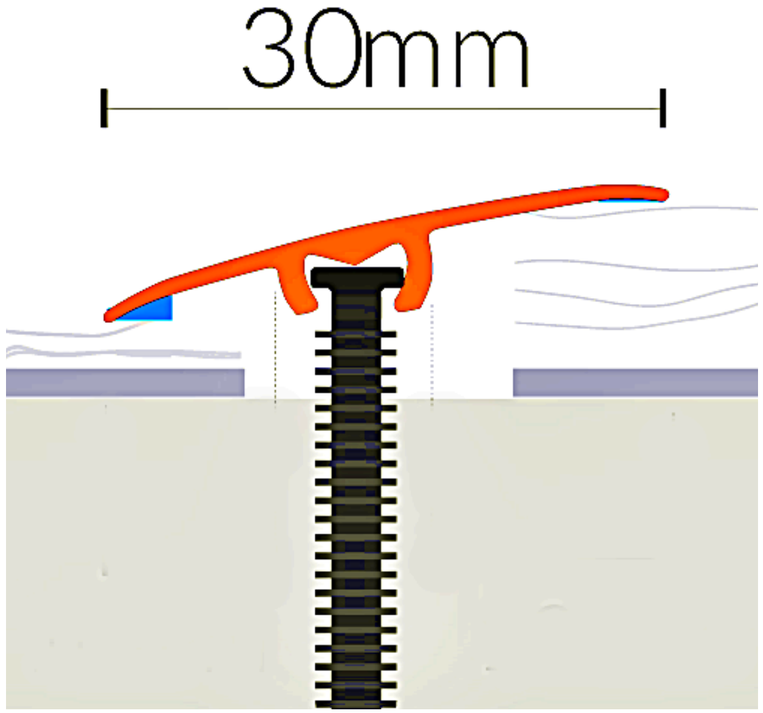
30mm

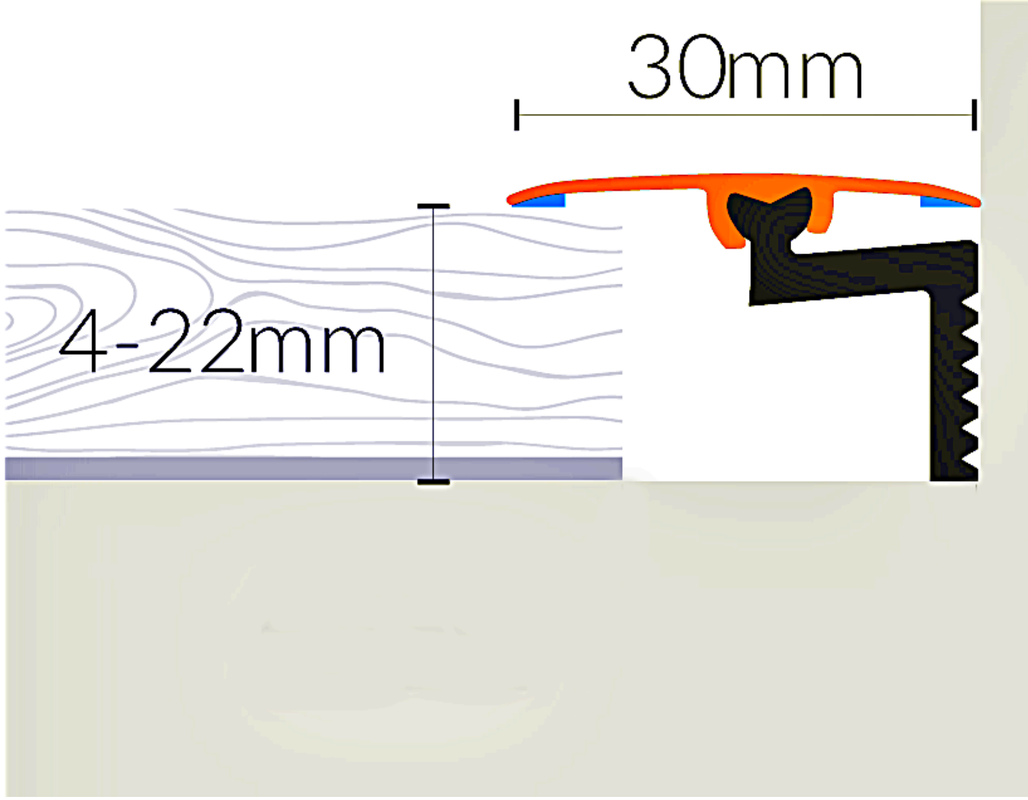
30mm
4-22mm

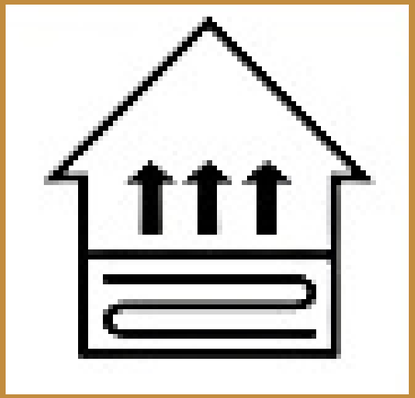

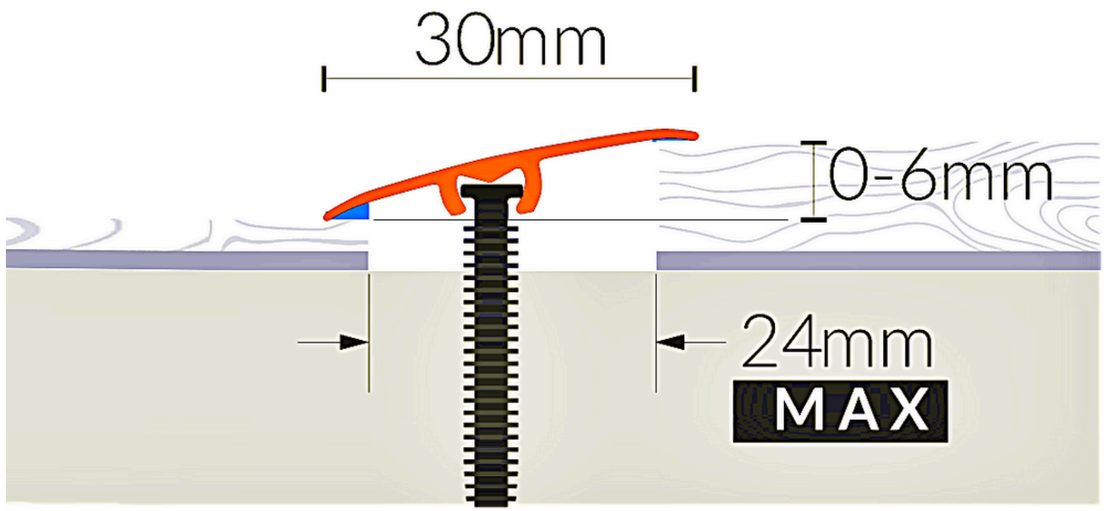
30mm
0-6mm
24mm
MAX

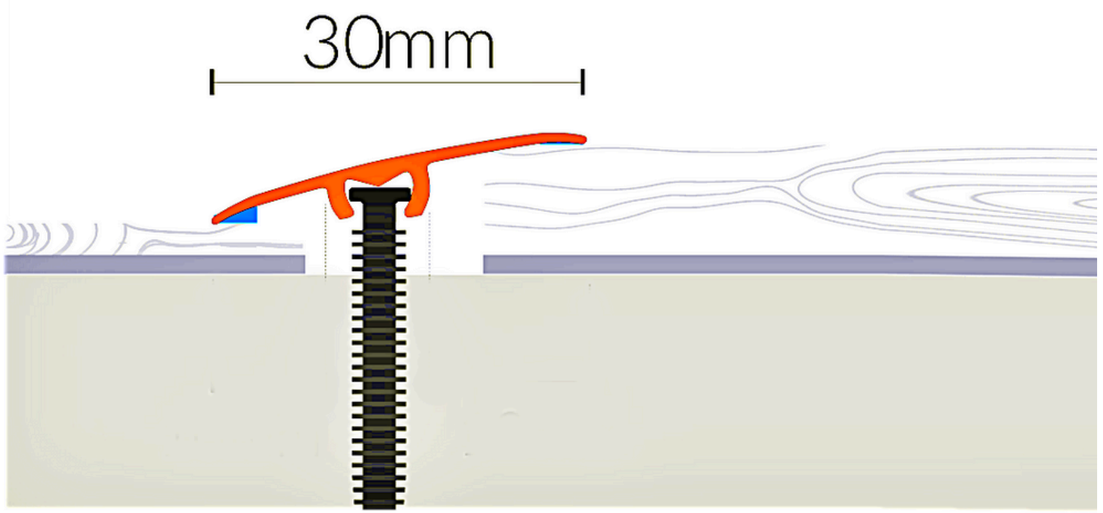
30mm

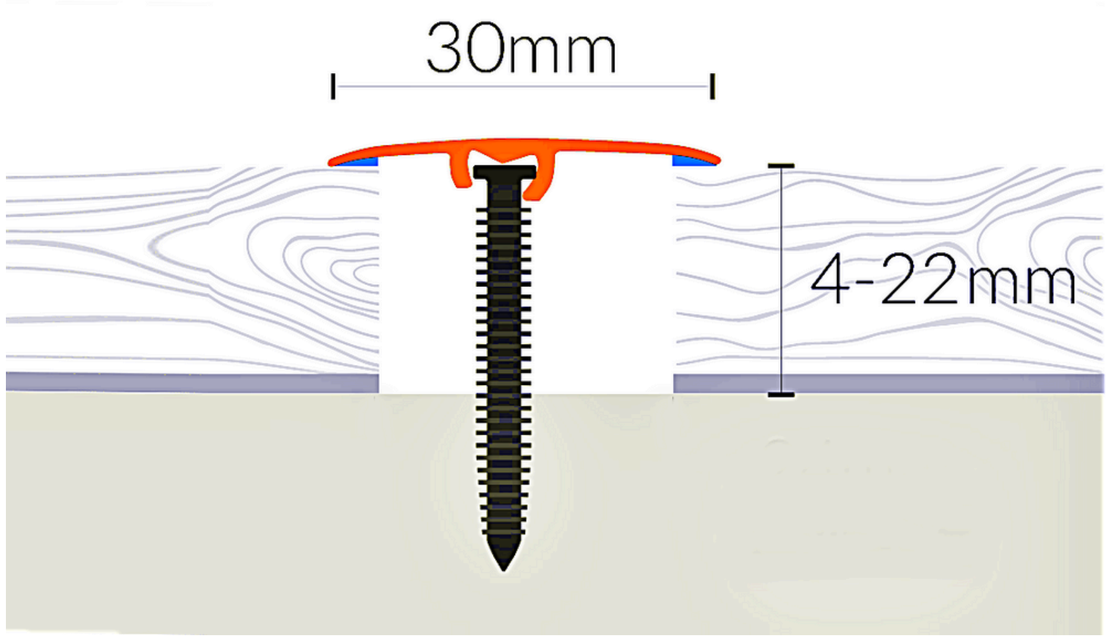
30mm
4-22mm

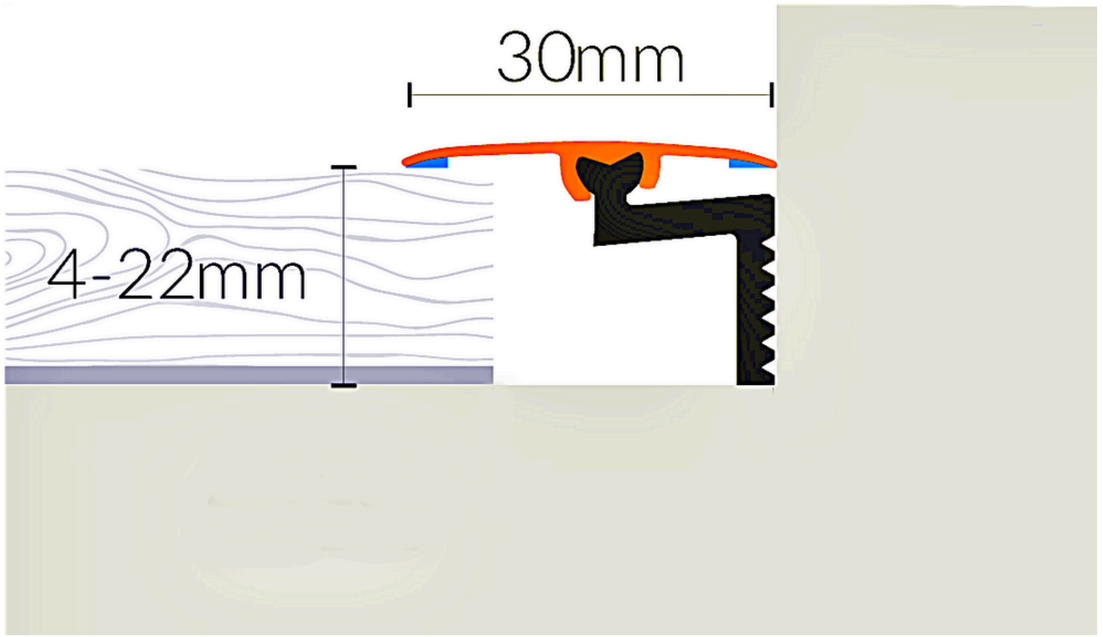
30mm
4-22mm

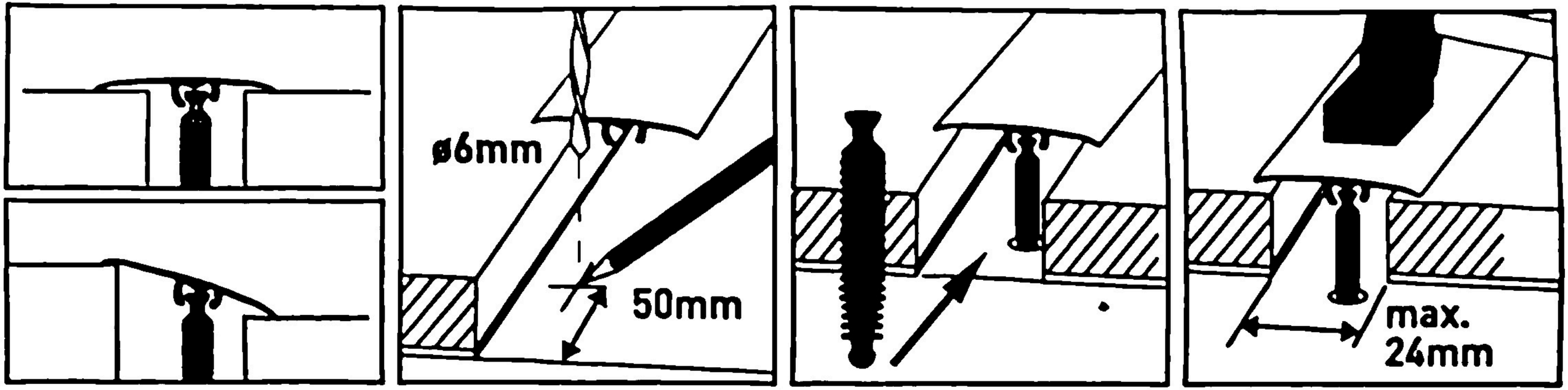
ø6mm
50mm
max.
24mm

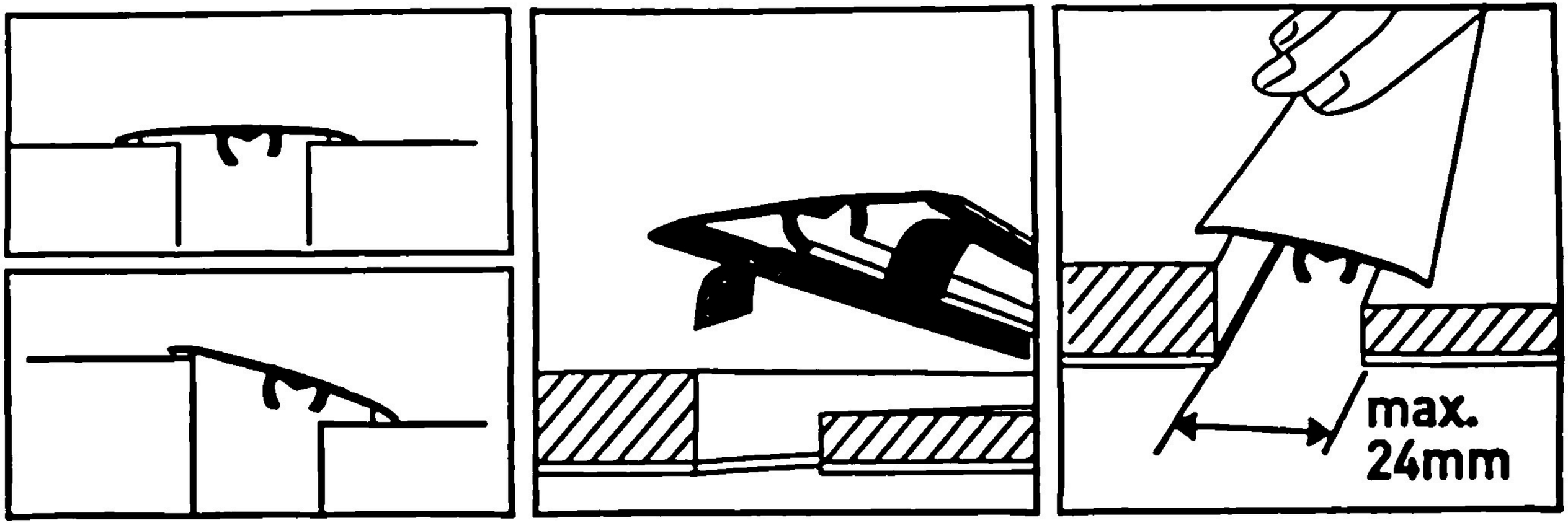
max.
24mm

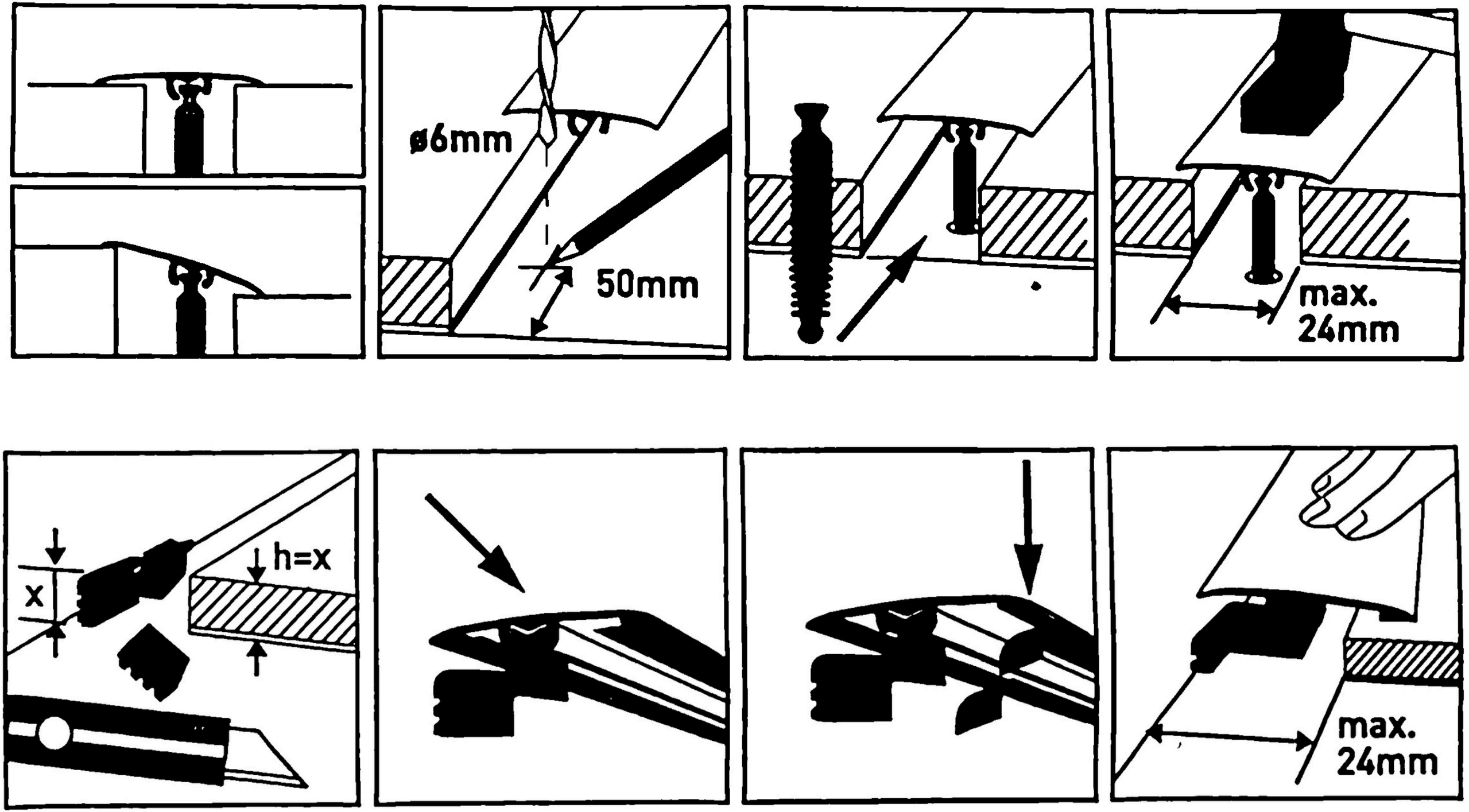
ø6mm
50mm
max.
24mm
h=x
x
max.
24mm