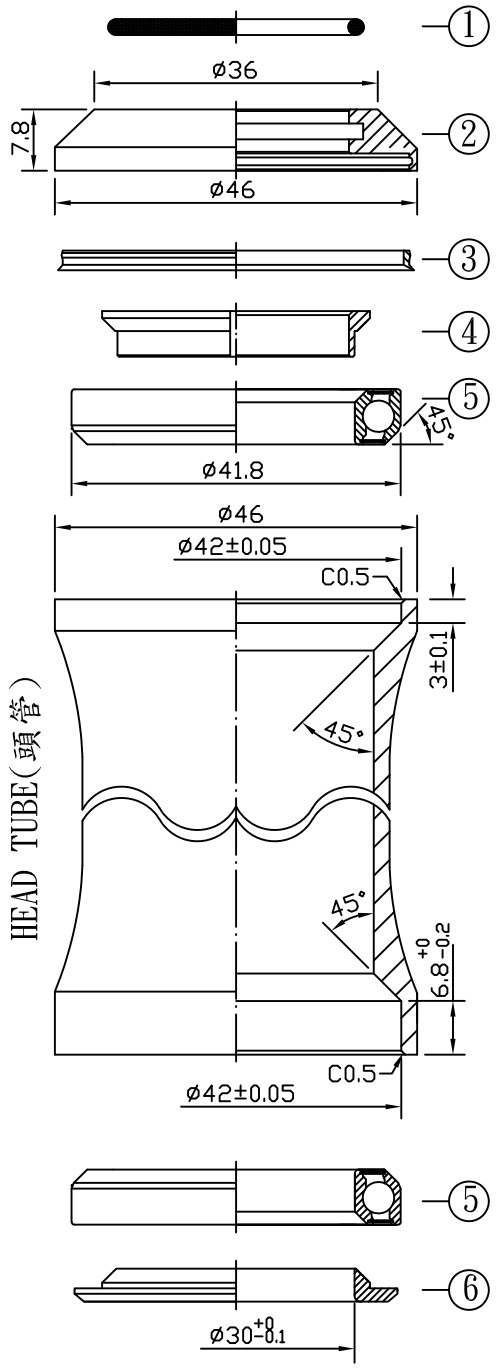

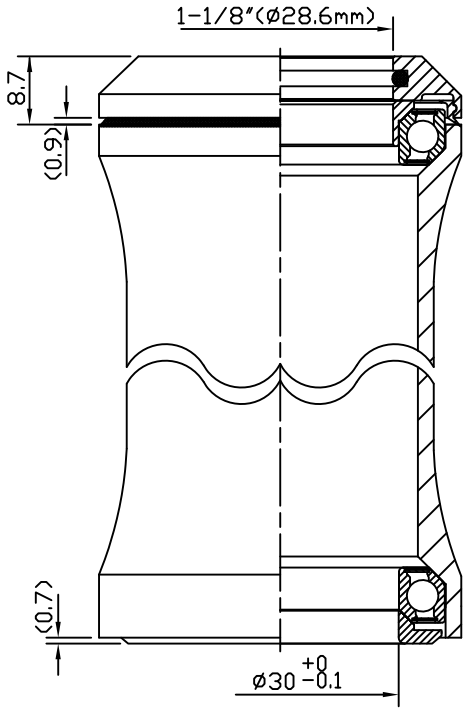

堆積高度(STACK HEIGHT)=9.4±1mm

可選配之上塞高度
(TOP COVER IS OPTIONAL)

型號(MODEL NO.): H51

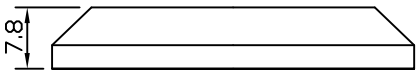

型號(MODEL NO.): H51M

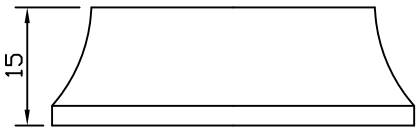

型號(MODEL NO.): H51H

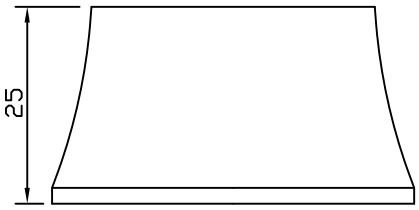

NO.	零件名稱 PART NAME	材質 MATERIAL	圖號 DRAWING NO.	台量 Q'TY	尺寸 DIM. DESCRIPTION
1	O形圈 O-RING	橡膠 NBR	120-8	1	ID28.5xø2
2	鋁上塞 TOP COVER	鋁合金 6061/T6	51-3	1	1-1/8"
3	防塵蓋 UPPER WATER SEAL	橡膠 NBR	51-0	1	
4	鋁斜管 COMPRESSION RING	鋁合金 6061/T6	51-2	1	1-1/8"
5	密封式軸承 AC SEALED BEARING	軸承鋼 SUJ2	NHB-6B	2	OD41.8x45°x45°
6	鋁下塞 CROWN RACE	鋁合金 7075/T6	51-6	1	ø30 +0 -0.1

- 與Campagnolo車架相容
- 全隱藏式車頭碗組
- 1-1/8"(28.6mm) 無牙式前叉立管
- 車頭管外徑=46mm[建議值]
- 鋁合金(6061)上塞
- 鋁合金(7075)下塞
- 斜接觸角度密封軸承

- Campagnolo compatible
- Full-integrated headset
- For 1-1/8" threadless steerer
- Headtube OD.= 46mm
- 6061/T6 cnc machined top cover with seals
- 7075/T6 cnc machined crown race
- Angular contact sealed bearings

單位 UNIT	mm	比例 SCALE	1:1	日期 DRAWING DATE	2001.03.09	角法 VIEW	
型號 ITEM NO.	NECO 51/51M/51H						版次(REV):A
品名 PART NAME	H51/H51M/H51H 組立圖(Assembly drawing)						
規格 DIMENSION	1-1/8"x42x30						
圖號 PART NO.	H51(H51M/H51H)-組立圖-A						

NECO® 誌慶工業股份有限公司