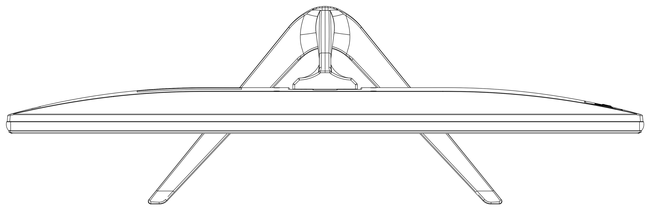

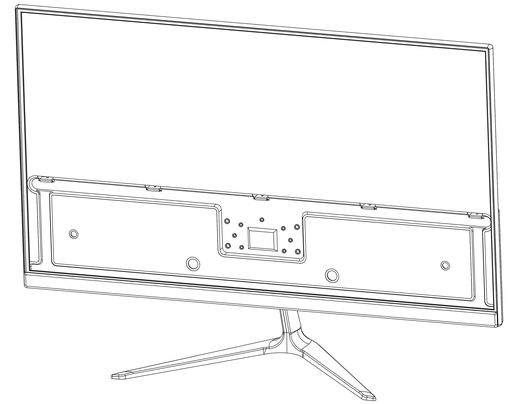

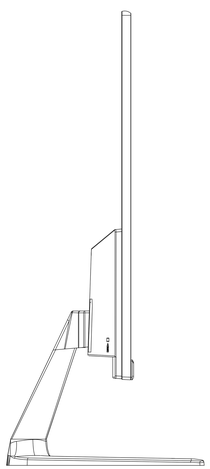

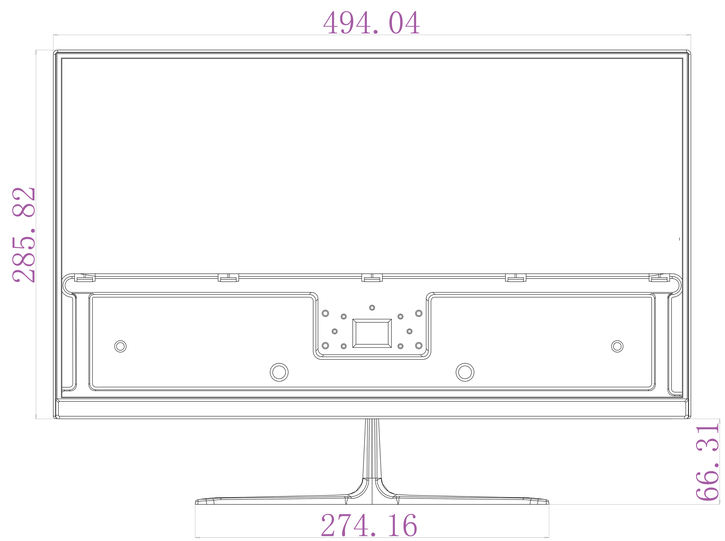
494.04
285.82
66.31
274.16

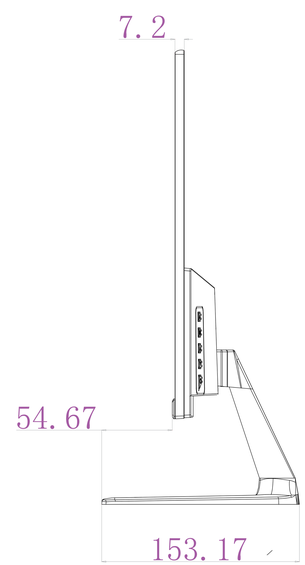
7.2
54.67
153.17

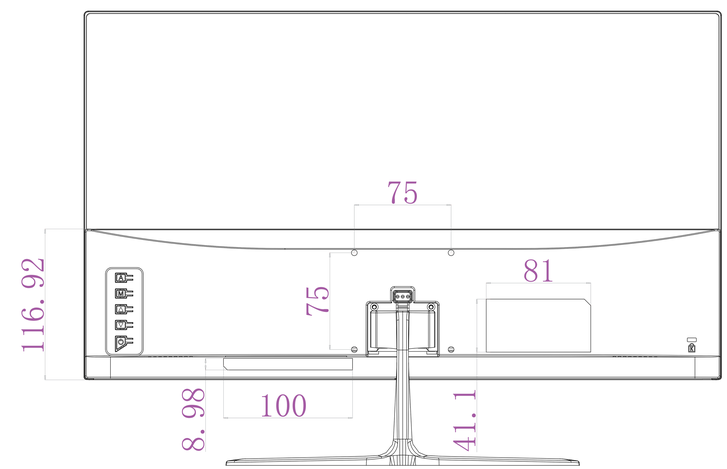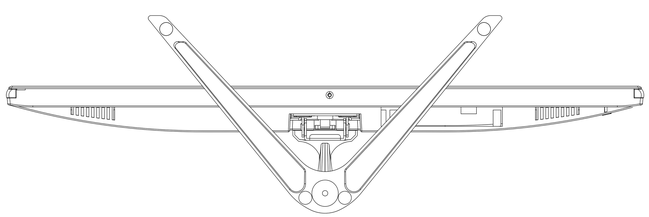
75
81
116.92
75
8.98
100
41.1