VEVOR®

TOUGH TOOLS, HALF PRICE

Technical Support and E-Warranty Certificate www.vevor.com/support

Park Benches

We continue to be committed to provide you tools with competitive price.
"Save Half", "Half Price" or any other similar expressions used by us only represents an estimate of savings you might benefit from buying certain tools with us compared to the major top brands and does not necessarily mean to cover all categories of tools offered by us. You are kindly reminded to verify carefully when you are placing an order with us if you are actually saving half in comparison with the top major brands.

VEVOR®
TOUGH TOOLS, HALF PRICE

Park Benches

YQ-HC4003

NEED HELP? CONTACT US!

Have product questions? Need technical support? Please feel free to contact us:

Technical Support and E-Warranty Certificate
www.vevor.com/support

This is the original instruction, please read all manual instructions carefully before operating. VEVOR reserves a clear interpretation of our user manual. The appearance of the product shall be subject to the product you received. Please forgive us that we won't inform you again if there are any technology or software updates on our product.

INSTRUCTIONS

Thank you very much for choosing this Park Benches.

- Please read all of the instructions before using it. The information will help you achieve the best possible results.

The products carried in this catalog may be different in color than the actual item.

WARNING:

1. Operate in a safe work environment. Keep your work area clean, well-lit, and free of distractions.
2. Wear heavy-duty work gloves during assembly.
3. Over-loading is strictly forbidden.

MODEL AND PARAMETERS

63 inch park bench which used metal and wood: Consisting of a seat frame, seat panel, backrest, and armrests etc.,

Rating loading 500lbs/ 226.8kg.

ASSEMBLY AND USE

Part list

① Chair leg connecting rod * 1 ②. Chair legs * 2 ③.Seat Plate* 1

④. Screw(M6X40) * 8 ⑤. Screw(M6X60) * 2 ⑥. Allen wrench*1

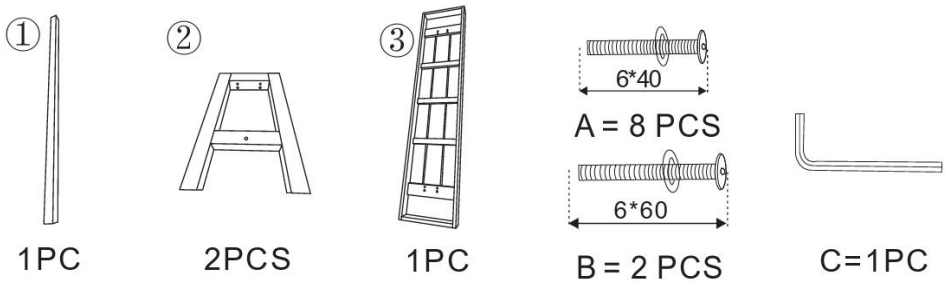

ASSEMBLY STEPS NOTE:

Leave bolts half-tightened on the bench during assembly until unit is assembled, then finish tightening bolts ·

STEP 1: Screw 2 chair legs (②) into seat plate (③) with 8pcs M6X40bolts, please help to keep the angle of chair legs open outward.

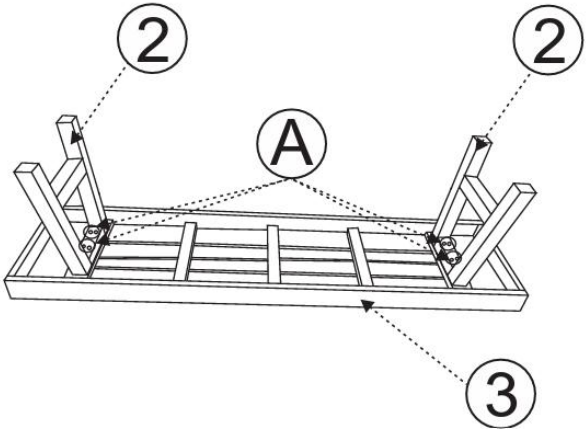

Step 1

STEP 2: Screw Chair leg connecting rod(①) into chair legs(②)

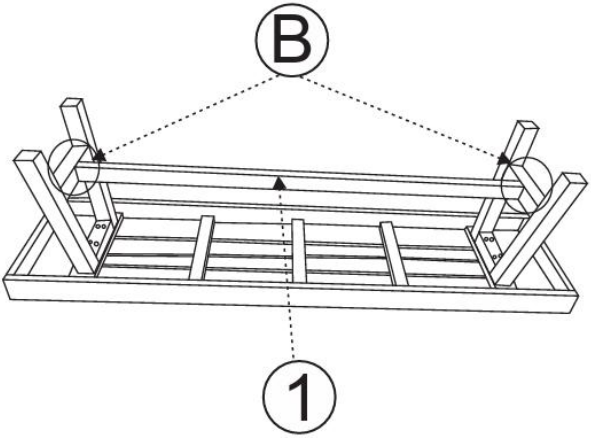

Step 2

Maintenance

1.Check screw fastening regularly.

Manufacturer: Shanghaimuxinmuyeyouxiangongsi
Address: Shuangchenglu 803nong11hao1602A-1609shi, baoshanqu, shanghai 200000 CN.
Imported to AUS: SIHAO PTY LTD. 1 ROKEVA STREETEASTWOOD NSW 2122 Australia
Imported to USA: Sanven Technology Ltd. Suite 250, 9166 Anaheim Place, Rancho Cucamonga, CA 91730

UK	REP

E-CrossStu GmbH
Mainzer Landstr.69, 60329 Frankfurt am Main.

EC	REP

YH CONSULTING LIMITED.
C/O YH Consulting Limited Office 147, Centurion House,
London Road, Staines-upon-Thames, Surrey, TW18 4AX

VEVOR®

TOUGH TOOLS, HALF PRICE

Technical Support and E-Warranty Certificate

www.vevor.com/support

VEVOR®

TOUGH TOOLS, HALF PRICE

Supporto tecnico e certificato di garanzia elettronica www.vevor.com/support

Panchine del parco

We continue to be committed to provide you tools with competitive price.
"Save Half", "Half Price" or any other similar expressions used by us only represents an estimate of savings you might benefit from buying certain tools with us compared to the major top brands and does not necessarily mean to cover all categories of tools offered by us. You are kindly reminded to verify carefully when you are placing an order with us if you are actually saving half in comparison with the top major brands.

VEVOR®
TOUGH TOOLS, HALF PRICE

Park Benches

YQ-HC4003

NEED HELP? CONTACT US!

Have product questions? Need technical support? Please feel free to contact us:

Technical Support and E-Warranty Certificate
www.vevor.com/support

This is the original instruction, please read all manual instructions carefully before operating. VEVOR reserves a clear interpretation of our user manual. The appearance of the product shall be subject to the product you received. Please forgive us that we won't inform you again if there are any technology or software updates on our product.

INSTRUCTIONS

Grazie mille per aver scelto queste panchine .

- Si prega di leggere tutte le istruzioni prima di utilizzarlo. Le informazioni ti aiuteranno a ottenere i migliori risultati possibili.

I prodotti presenti in questo catalogo potrebbero differire nel colore rispetto all'articolo reale .

AVVERTIMENTO:

2. Operare in un ambiente di lavoro sicuro. Mantieni la tua area di lavoro pulita, ben illuminata e priva di distrazioni.
2. Indossare guanti da lavoro resistenti durante il montaggio.
4. È severamente vietato sovraccaricare.

MODEL AND PARAMETERS

Panca da parco da 63 pollici che utilizza metallo e legno: composta da telaio del sedile, pannello del sedile, schienale e braccioli, ecc.,
Carico nominale 500 libbre/226,8 kg.

ASSEMBLY AND USE

Elenco delle parti

① Asta di collegamento della gamba della sedia * 1 ② . Gambe della sedia * 2 ③. Piastra del sedile * 1 ④ . Vite (M6X40) * 8 ⑤. Vite (M6X60) * 2 ⑥. Chiave a brugola*1

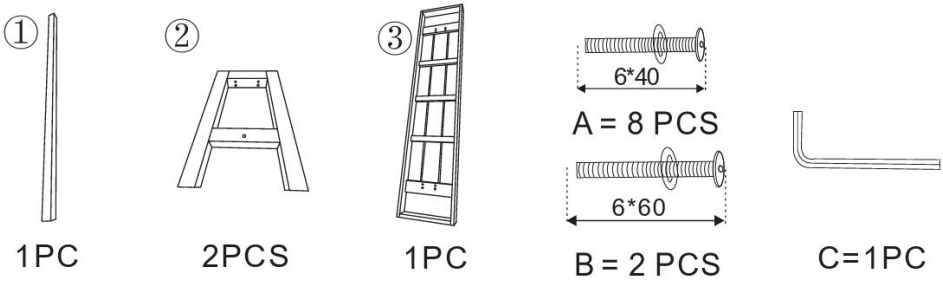

FASI DI MONTAGGIO NOTA:

Lasciare i bulloni serrati a metà sul banco durante il montaggio finché l'unità non è fissata assemblato , quindi finire di stringere i bulloni ·

PASSO 1: Vite 2 le gambe della sedia (②) nella piastra del sedile (③)

con 8 bulloni M 6 X 4 0 , aiutare a mantenere l'angolo delle gambe della sedia aperte verso l'esterno.

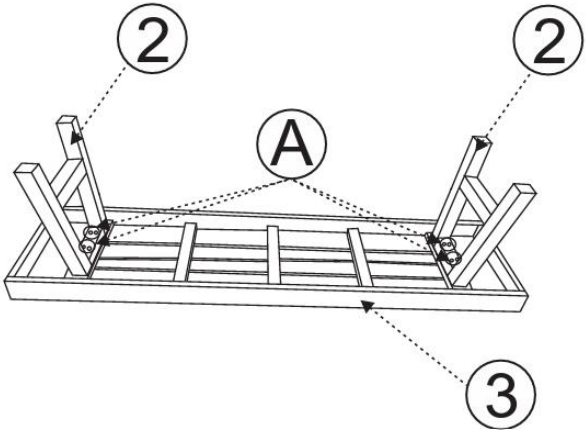

Passo 1

PASSO 2 : Vite La biella della gamba della sedia (①) nel o gambe della

sedia (②)

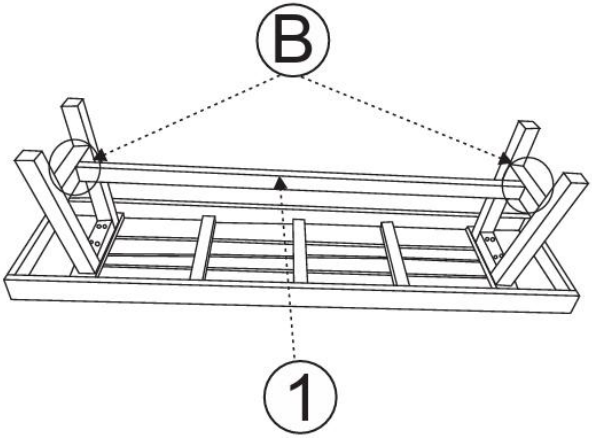

Passo 2

Manutenzione

1.Controllare regolarmente il fissaggio delle viti.

Produttore : Shanghaimuxinmuyeyouxiangongsi
Indirizzo: Shuangchenglu 803nong11hao1602A-1609shi, baoshanqu, shanghai 200000 CN.
Importato in AUS: SIHAO PTY LTD. 1 ROKEVA STREETEASTWOOD NSW 2122 Australia
Importato negli Stati Uniti: Sanven Technology Ltd. Suite 250, 9166 Anaheim
Luogo, Rancho Cucamonga, CA 91730

UK	REP

E-CrossStu GmbH

Mainzer Landstr.69, 60329 Frankfurt am Main.

EC	REP

YH CONSULTING LIMITED.

C/O YH Consulting Limited Office 147, Centurion House,

London Road, Staines-upon-Thames, Surrey, TW18 4AX

VEVOR®

TOUGH TOOLS, HALF PRICE

Supporto tecnico e certificato di garanzia elettronica

www.vevor.com/support

VEVOR®

TOUGH TOOLS, HALF PRICE

Wsparcie techniczne i certyfikat e-gwarancji www.vevor.com/support

Ławki parkowe

We continue to be committed to provide you tools with competitive price.
"Save Half", "Half Price" or any other similar expressions used by us only represents an estimate of savings you might benefit from buying certain tools with us compared to the major top brands and does not necessarily mean to cover all categories of tools offered by us. You are kindly reminded to verify carefully when you are placing an order with us if you are actually saving half in comparison with the top major brands.

VEVOR®
TOUGH TOOLS, HALF PRICE

Park Benches

YQ-HC4003

NEED HELP? CONTACT US!

Have product questions? Need technical support? Please feel free to contact us:

Technical Support and E-Warranty Certificate
www.vevor.com/support

This is the original instruction, please read all manual instructions carefully before operating. VEVOR reserves a clear interpretation of our user manual. The appearance of the product shall be subject to the product you received. Please forgive us that we won't inform you again if there are any technology or software updates on our product.

INSTRUCTIONS

Dziękujemy bardzo za wybór ławek parkowych .

- Przed użyciem przeczytaj całą instrukcję. Informacje te pomogą Ci osiągnąć najlepsze możliwe rezultaty.

Produkty prezentowane w tym katalogu mogą różnić się kolorem od rzeczywistego .

OSTRZEŻENIE:

3. Pracuj w bezpiecznym środowisku pracy. Utrzymuj miejsce pracy w czystości, dobrze oświetlone i wolne od czynników rozpraszających.
2. Podczas montażu należy nosić grube rękawice robocze.
5. Przeciążanie jest surowo zabronione.

MODEL AND PARAMETERS

Ławka parkowa o średnicy 63 cali , w której wykorzystano metal i drewno: Składa się z ramy siedziska, panelu siedziska, oparcia i podłokietników itp.,

Obciążenie znamionowe 500 funtów/226,8 kg.

ASSEMBLY AND USE

Lista części

① Korbowód nogi krzesła * 1 ② . Nogi krzesła * 2 ③. Płyta siedziska * 1

④ . Śruba (M6X40) * 8 ⑤. Śruba (M6X60) * 2 ⑥. Klucz imbusowy*1

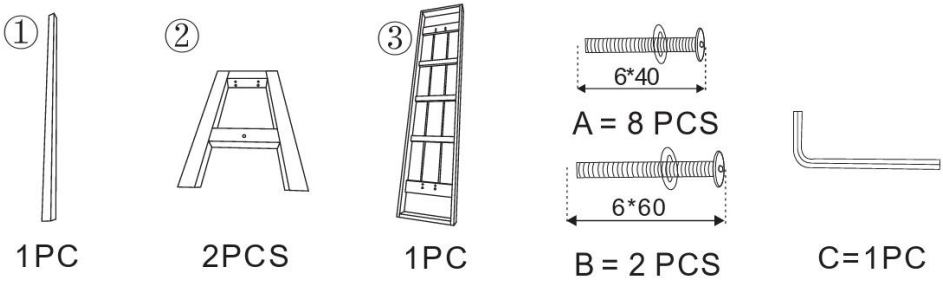

ETAPY MONTAŻU UWAGA:

pozostawić śruby do połowy dokręcone na stole warsztatowym, aż do momentu zamontowania urządzenia zmontowane , następnie zakończ dokręcanie śrub ·

KROK 1: Śruba 2 nogi krzesła (②) w płycie siedziska (③) za pomocą 8 śrub M 6 X 4 0 , pomóż utrzymać kąt nóg krzesła otwarty na zewnątrz.

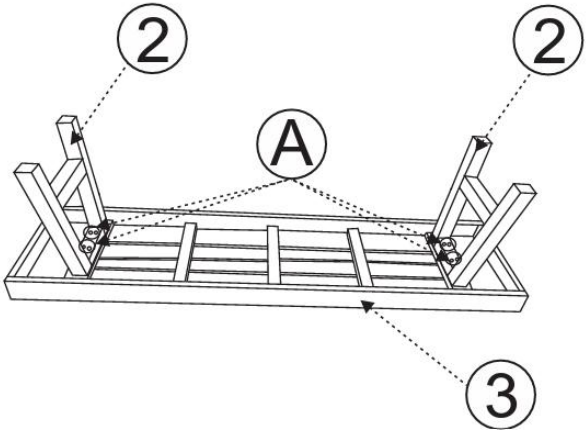

Krok 1

KROK 2 : Wkręcić pręt łączący nogę krzesła (①) w o nogi krzesła (②)

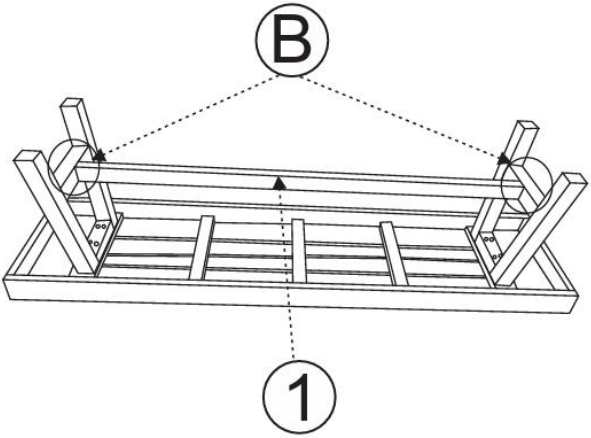

Krok 2

Konserwacja

1. Regularnie sprawdzaj dokręcenie śrub.

Producent : Shanghaimuxinmuyeyouxiangongsi
Adres: Shuangchenglu 803nong11hao1602A-1609shi, baoshanqu, szanghaj 200000 CN.
Import do AUS: SIHAO PTY LTD. 1 ROKEVA STREETEASTWOOD NSW 2122 Australia
Import do USA: Sanven Technology Ltd. Suite 250, 9166 Anaheim Place, Rancho Cucamonga, Kalifornia 91730

UK	REP

E-CrossStu GmbH
Mainzer Landstr.69, 60329 Frankfurt am Main.

EC	REP

YH CONSULTING LIMITED.
C/O YH Consulting Limited Office 147, Centurion House,
London Road, Staines-upon-Thames, Surrey, TW18 4AX

VEVOR®

TOUGH TOOLS, HALF PRICE

Wsparcie techniczne i certyfikat e-gwarancji

www.vevor.com/support

VEVOR®

TOUGH TOOLS, HALF PRICE

Technischer Support und E-Garantiezertifikat www.vevor.com/support

Parkbänke

We continue to be committed to provide you tools with competitive price.
"Save Half", "Half Price" or any other similar expressions used by us only represents an estimate of savings you might benefit from buying certain tools with us compared to the major top brands and does not necessarily mean to cover all categories of tools offered by us. You are kindly reminded to verify carefully when you are placing an order with us if you are actually saving half in comparison with the top major brands.

VEVOR®
TOUGH TOOLS, HALF PRICE

Park Benches

YQ-HC4003

NEED HELP? CONTACT US!

Have product questions? Need technical support? Please feel free to contact us:

Technical Support and E-Warranty Certificate
www.vevor.com/support

This is the original instruction, please read all manual instructions carefully before operating. VEVOR reserves a clear interpretation of our user manual. The appearance of the product shall be subject to the product you received. Please forgive us that we won't inform you again if there are any technology or software updates on our product.

INSTRUCTIONS

Vielen Dank, dass Sie sich für diese Parkbänke entschieden haben .

- Bitte lesen Sie alle Anweisungen, bevor Sie es verwenden. Die Informationen helfen Ihnen, die bestmöglichen Ergebnisse zu erzielen.

Die in diesem Katalog aufgeführten Produkte können farblich vom tatsächlichen Artikel abweichen .

WARNUNG:

4. Arbeiten Sie in einer sicheren Arbeitsumgebung. Halten Sie Ihren Arbeitsbereich sauber, gut beleuchtet und frei von Ablenkungen.
2. Tragen Sie bei der Montage robuste Arbeitshandschuhe.
6. Überladung ist strengstens verboten.

MODEL AND PARAMETERS

63-Zoll- Parkbank aus Metall und Holz: Bestehend aus Sitzrahmen, Sitzplatte, Rückenlehne und Armlehnen usw.,
Nennlast 500 lbs/226,8 kg.

ASSEMBLY AND USE

Stückliste

① Verbindungsstange für Stuhlbeine * 1 ② . Stuhlbeine * 2 ③.Sitzplatte * 1 ④ . Schraube (M6X40) * 8 ⑤. Schraube (M6X60) * 2 ⑥. Inbusschlüssel*1

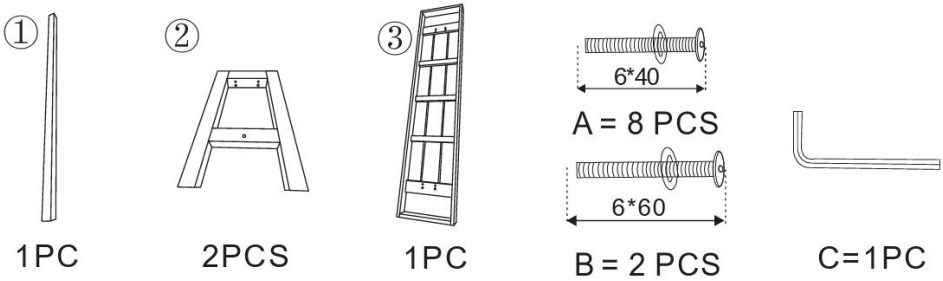

MONTAGESCHRITTE HINWEIS:
auf der Bank halb angezogen , bis das Gerät montiert ist zusammengebaut , dann Schrauben festziehen ·

SCHRITT 1: Schraube 2 Befestigen Sie die Stuhlbeine (②) mit 8

Schrauben M 6 x 4 0 in der Sitzplatte (③) . Bitte achten Sie darauf, dass der

Winkel der Stuhlbeine nach außen offen bleibt.

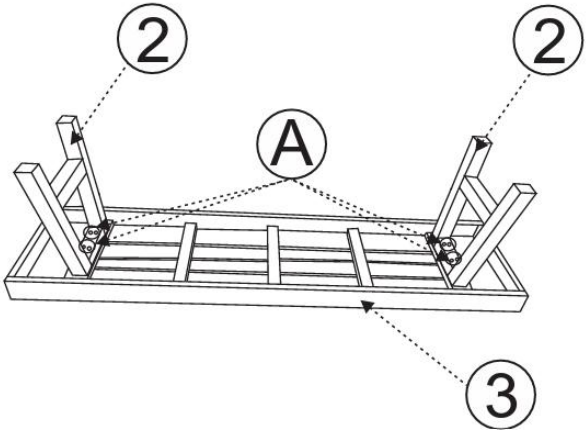

Schritt 1

SCHRITT 2 : Schrauben Sie die Stuhlbein-Verbindungsstange (①) ein

Stuhlbeine (②)

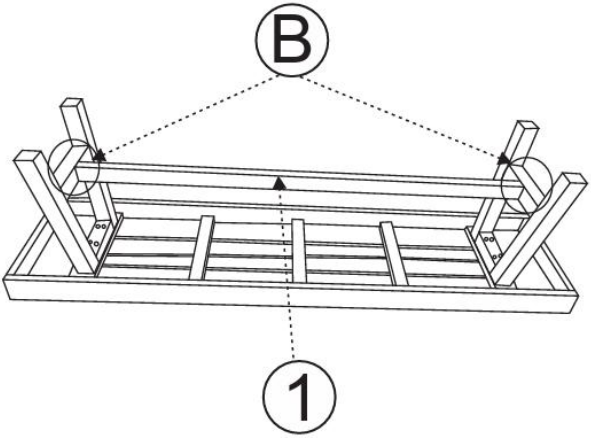

Schritt 2

Wartung

1.Schraubenbefestigung regelmäßig prüfen.

Hersteller : Shanghaimuxinmuyeyouxiangongsi
Adresse: Shuangchenglu 803nong11hao1602A-1609shi, baoshanqu, Shanghai 200000 CN.
Importiert nach AUS: SIHAO PTY LTD. 1 ROKEVA STREETEASTWOOD NSW 2122 Australien
In die USA importiert: Sanven Technology Ltd. Suite 250, 9166 Anaheim Place, Rancho Cucamonga, CA 91730

UK	REP

E-CrossStu GmbH
Mainzer Landstr.69, 60329 Frankfurt am Main.

EC	REP

YH CONSULTING LIMITED.
C/O YH Consulting Limited Office 147, Centurion House,
London Road, Staines-upon-Thames, Surrey, TW18 4AX

VEVOR®

TOUGH TOOLS, HALF PRICE

Zertifikat für technischen Support und E-Garantie

www.vevor.com/support

VEVOR®

TOUGH TOOLS, HALF PRICE

Assistance technique et certificat de garantie électronique www.vevor.com/support

Bancs de parc

We continue to be committed to provide you tools with competitive price.
"Save Half", "Half Price" or any other similar expressions used by us only represents an estimate of savings you might benefit from buying certain tools with us compared to the major top brands and does not necessarily mean to cover all categories of tools offered by us. You are kindly reminded to verify carefully when you are placing an order with us if you are actually saving half in comparison with the top major brands.

VEVOR®
TOUGH TOOLS, HALF PRICE

Park Benches

YQ-HC4003

NEED HELP? CONTACT US!

Have product questions? Need technical support? Please feel free to contact us:

Technical Support and E-Warranty Certificate
www.vevor.com/support

This is the original instruction, please read all manual instructions carefully before operating. VEVOR reserves a clear interpretation of our user manual. The appearance of the product shall be subject to the product you received. Please forgive us that we won't inform you again if there are any technology or software updates on our product.

INSTRUCTIONS

Merci beaucoup d'avoir choisi ces bancs de parc .

- Veuillez lire toutes les instructions avant de l'utiliser. Les informations vous aideront à obtenir les meilleurs résultats possibles.

Les produits présentés dans ce catalogue peuvent avoir une couleur différente de celle de l'article réel .

AVERTISSEMENT:

5. Opérez dans un environnement de travail sécuritaire. Gardez votre espace de travail propre, bien éclairé et exempt de distractions.
2. Portez des gants de travail résistants pendant l'assemblage.
7. La surcharge est strictement interdite.

MODEL AND PARAMETERS

Banc de parc de 63 pouces utilisant du métal et du bois : composé d'un cadre de siège, d'un panneau de siège, d'un dossier et d'accoudoirs, etc., Capacité de charge nominale de 500 lb/226,8 kg.

ASSEMBLY AND USE

Liste des pièces

① Bielle de pied de chaise * 1 ② . Pied de chaise s * 2 ③. Plaque de siège * 1 ④ . Vis (M6X40) * 8 ⑤. Vis (M6X60) * 2 ⑥. Clé Allen * 1

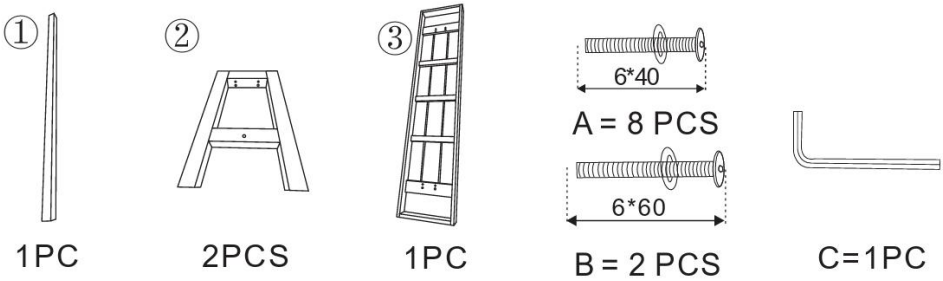

ÉTAPES D'ASSEMBLAGE REMARQUE :

Laissez les boulons à moitié serrés sur le banc pendant l'assemblage jusqu'à ce que l'unité soit assemblé , puis terminer le serrage des boulons ·

ÉTAPE 1: Vis 2 les pieds de la chaise (②) dans la plaque d'assise (③) avec 8 boulons M 6 X 4 0 , veuillez aider à garder l'angle des pieds de la chaise ouvert vers l'extérieur.

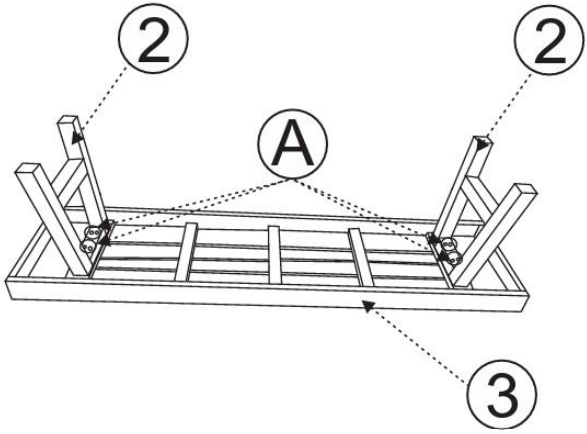

Étape 1

ÉTAPE 2 : Visser la bielle du pied de chaise (①) dans pieds de chaise (②)

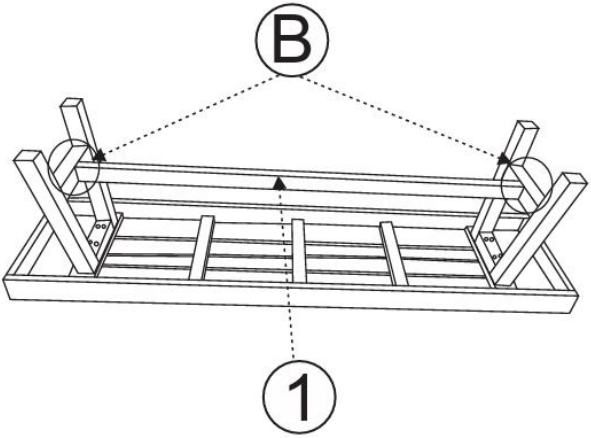

Étape 2

Entretien

1. Vérifiez régulièrement le serrage des vis.

Fabricant : Shanghaimuxinmuyeyouxiangongsi
Adresse : Shuangchenglu 803nong11hao1602A-1609shi, baoshanqu, Shanghai 200000 CN.
Importé en Australie : SIHAO PTY LTD. 1 ROKEVA STREETASTWOOD NSW 2122 Australie
Importé aux États-Unis : Sanven Technology Ltd. Suite 250, 9166 Anaheim
Lieu, Rancho Cucamonga, CA 91730

UK	REP

E-CrossStu GmbH

Mainzer Landstr.69, 60329 Frankfurt am Main.

EC	REP

YH CONSULTING LIMITED.

C/O YH Consulting Limited Office 147, Centurion House,

London Road, Staines-upon-Thames, Surrey, TW18 4AX

VEVOR®

TOUGH TOOLS, HALF PRICE

Assistance technique et certificat de garantie électronique

www.vevor.com/support

VEVOR®

TOUGH TOOLS, HALF PRICE

Technische ondersteuning en e-garantiecertificaat www.vevor.com/support

Parkbanken

We continue to be committed to provide you tools with competitive price.
"Save Half", "Half Price" or any other similar expressions used by us only represents an estimate of savings you might benefit from buying certain tools with us compared to the major top brands and does not necessarily mean to cover all categories of tools offered by us. You are kindly reminded to verify carefully when you are placing an order with us if you are actually saving half in comparison with the top major brands.

VEVOR®
TOUGH TOOLS, HALF PRICE

Park Benches

YQ-HC4003

NEED HELP? CONTACT US!

Have product questions? Need technical support? Please feel free to contact us:

Technical Support and E-Warranty Certificate
www.vevor.com/support

This is the original instruction, please read all manual instructions carefully before operating. VEVOR reserves a clear interpretation of our user manual. The appearance of the product shall be subject to the product you received. Please forgive us that we won't inform you again if there are any technology or software updates on our product.

INSTRUCTIONS

Hartelijk dank dat u voor deze parkbanken heeft gekozen .

- Lees alle instructies voordat u het gebruikt. De informatie zal u helpen de best mogelijke resultaten te bereiken.

De producten in deze catalogus kunnen qua kleur afwijken van het daadwerkelijke artikel .

WAARSCHUWING:

6. Werken in een veilige werkomgeving. Houd uw werkplek schoon, goed verlicht en vrij van afleiding.
2. Draag tijdens de montage stevige werkhandschoenen.
8. Overbelasting is ten strengste verboden.

MODEL AND PARAMETERS

63 inch parkbank die metaal en hout gebruikte: bestaande uit een zitframe, zitpaneel, rugleuning en armleuningen enz.,
Beoordeling belasting 500 lbs/226,8 kg.

ASSEMBLY AND USE

Onderdelen lijst

① Verbindingsstang stoelpoot * 1 ② . Stoelpoot s * 2 ③.Zitplaat * 1 ④ .

Schroef (M6X40) * 8 ⑤. Schroef (M6X60) * 2 ⑥. Inbussleutel*1

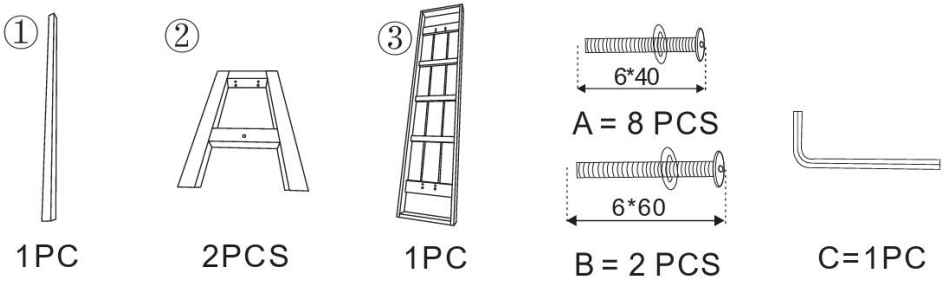

MONTAGESTAPPEN OPMERKING:
tijdens de montage half aangedraaid op de bank totdat de eenheid is gemonteerd gemonteerd en voltooi vervolgens het aandraaien van de bouten ·

STAP 1: Schroef 2 stoelpoten (②) in zitplaat (③) met 8 stuks M 6 X 4 0

bouten , help alstublieft om de hoek van de stoelpoten naar buiten open te houden.

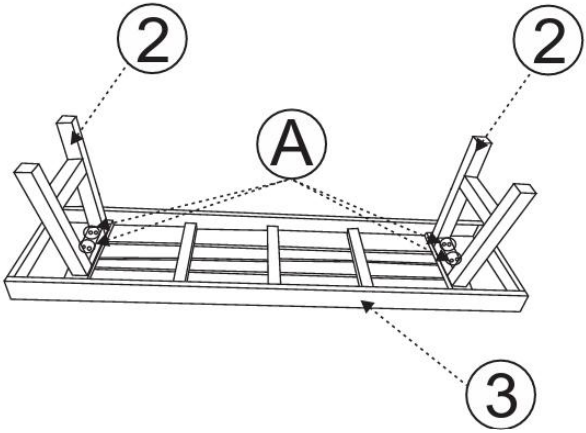

Stap 1

STAP 2 : Schroef de drijfstang van de stoelpoot (①) in o stoelpoten

(②)

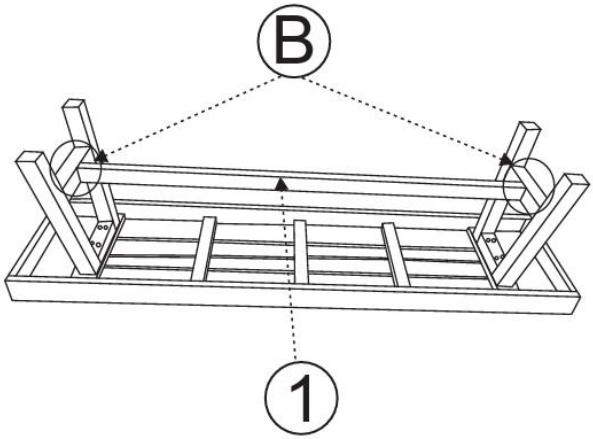

Stap 2

Onderhoud

1. Controleer de schroefbevestiging regelmatig.

Fabrikant : Shanghaimuxinmuyeyouxiangongsi
Adres: Shuangchenglu 803nong11hao1602A-1609shi, baoshanqu, shanghai 200000 CN.
Geïmporteerd naar AUS: SIHAO PTY LTD. 1 ROKEVA STREETEASTWOOD NSW 2122 Australië
Geïmporteerd in de VS: Sanven Technology Ltd. Suite 250, 9166 Anaheim
Plaats, Rancho Cucamonga, CA 91730

UK	REP

E-CrossStu GmbH

Mainzer Landstr.69, 60329 Frankfurt am Main.

EC	REP

YH CONSULTING LIMITED.

C/O YH Consulting Limited Office 147, Centurion House,

London Road, Staines-upon-Thames, Surrey, TW18 4AX

VEVOR®

TOUGH TOOLS, HALF PRICE

Technische ondersteuning en e-garantiecertificaat

www.vevor.com/support

VEVOR®

TOUGH TOOLS, HALF PRICE

Teknisk support och e-garanticertifikat www.vevor.com/support

Park bänkar

We continue to be committed to provide you tools with competitive price.
"Save Half", "Half Price" or any other similar expressions used by us only represents an estimate of savings you might benefit from buying certain tools with us compared to the major top brands and does not necessarily mean to cover all categories of tools offered by us. You are kindly reminded to verify carefully when you are placing an order with us if you are actually saving half in comparison with the top major brands.

VEVOR®
TOUGH TOOLS, HALF PRICE

Park Benches

YQ-HC4003

NEED HELP? CONTACT US!

Have product questions? Need technical support? Please feel free to contact us:

Technical Support and E-Warranty Certificate
www.vevor.com/support

This is the original instruction, please read all manual instructions carefully before operating. VEVOR reserves a clear interpretation of our user manual. The appearance of the product shall be subject to the product you received. Please forgive us that we won't inform you again if there are any technology or software updates on our product.

INSTRUCTIONS

Tack så mycket för att du valde denna parkbänk .

- Läs alla instruktioner innan du använder den. Informationen hjälper dig att uppnå bästa möjliga resultat.

Produkterna i denna katalog kan ha en annan färg än den faktiska varan .

VARNING:

7. Arbeta i en säker arbetsmiljö. Håll ditt arbetsområde rent, väl upplyst och fritt från distraktioner.

2. Använd kraftiga arbetshandskar vid montering.

9. Överbelastning är strängt förbjudet.

MODEL AND PARAMETERS

63 tums parkbänk som använde metall och trä: Bestående av en sitsram, sittpanel, ryggstöd och armstöd etc.,
Betygsbelastning 500lbs/226,8kg.

ASSEMBLY AND USE

Dellista

① Stolsbens vevstång * 1 ② . Stolsben s * 2 ③. Sittplatta * 1 ④ . Skruv (M6X40) * 8 ⑤. Skruv (M6X60) * 2 ⑥. Insexnyckel*1

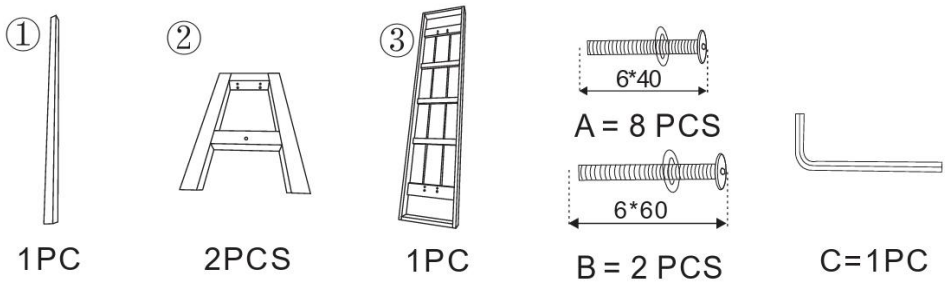

MONTERINGSSEG OBS:
Låt bultarna vara halvt åtdragna på bänken under monteringen tills enheten är monteras och dra sedan åt bultarna ·

STEG 1: Skruv 2 stolsben (②) in i sittplattan (③) med 8 st M 6 X 4 0

bultar , hjälp till att hålla vinkeln på stolsbenen öppen utåt.

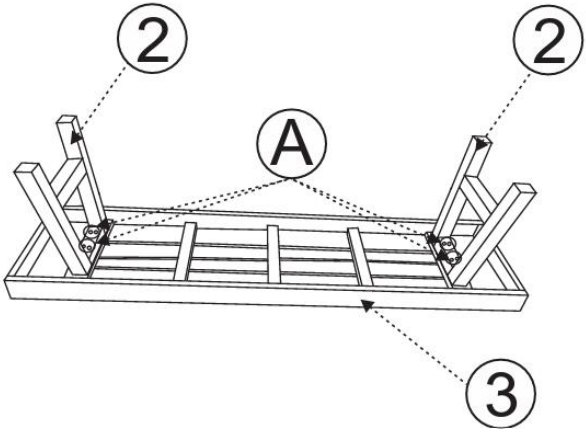

Steg 1

STEG 2 : Skruva fast vevstången för stolsben (①) i o stolsben (②)

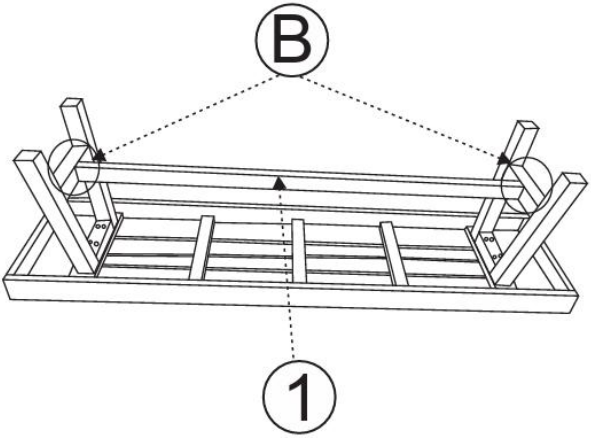

Steg 2

Underhåll

1.Kontrollera regelbundet skruvarna.

Tillverkare : Shanghaimuxinmuyeyouxiangongsi
Adress: Shuangchenglu 803nong11hao1602A-1609shi, baoshanqu, shanghai 200000 CN.
Importerad till AUS: SIHAO PTY LTD. 1 ROKEVA STREETEASTWOOD NSW 2122 Australien
Importerad till USA: Sanven Technology Ltd. Suite 250, 9166 Anaheim Place, Rancho Cucamonga, CA 91730

UK	REP

E-CrossStu GmbH
Mainzer Landstr.69, 60329 Frankfurt am Main.

EC	REP

YH CONSULTING LIMITED.
C/O YH Consulting Limited Office 147, Centurion House,
London Road, Staines-upon-Thames, Surrey, TW18 4AX

VEVOR®

TOUGH TOOLS, HALF PRICE

Teknisk support och e-garanticertifikat

www.vevor.com/support

VEVOR®

TOUGH TOOLS, HALF PRICE

Soporte técnico y certificado de garantía electrónica www.vevor.com/support

Bancos del parque

We continue to be committed to provide you tools with competitive price.
"Save Half", "Half Price" or any other similar expressions used by us only represents an estimate of savings you might benefit from buying certain tools with us compared to the major top brands and does not necessarily mean to cover all categories of tools offered by us. You are kindly reminded to verify carefully when you are placing an order with us if you are actually saving half in comparison with the top major brands.

VEVOR®
TOUGH TOOLS, HALF PRICE

Park Benches

YQ-HC4003

NEED HELP? CONTACT US!

Have product questions? Need technical support? Please feel free to contact us:

Technical Support and E-Warranty Certificate
www.vevor.com/support

This is the original instruction, please read all manual instructions carefully before operating. VEVOR reserves a clear interpretation of our user manual. The appearance of the product shall be subject to the product you received. Please forgive us that we won't inform you again if there are any technology or software updates on our product.

INSTRUCTIONS

Muchas gracias por elegir estos bancos del parque .

- Lea todas las instrucciones antes de usarlo. La información le ayudará a conseguir los mejores resultados posibles.

Los productos incluidos en este catálogo pueden tener un color diferente al del artículo real .

ADVERTENCIA:

8. Operar en un ambiente de trabajo seguro. Mantenga su área de trabajo limpia, bien iluminada y libre de distracciones.
2. Utilice guantes de trabajo resistentes durante el montaje.
10. Está estrictamente prohibida la sobrecarga.

MODEL AND PARAMETERS

Banco de parque de 63 pulgadas que utiliza metal y madera: consta de un marco de asiento, panel de asiento, respaldo y apoyabrazos, etc.
Carga nominal 500 lb/226,8 kg.

ASSEMBLY AND USE

Lista de

① Biela de la pata de la silla * 1 ② . Pata de la silla s * 2 ③. Placa del asiento * 1 ④ . Tornillo (M6X40) * 8 ⑤. Tornillo (M6X60) * 2 ⑥. Llave Allen*1

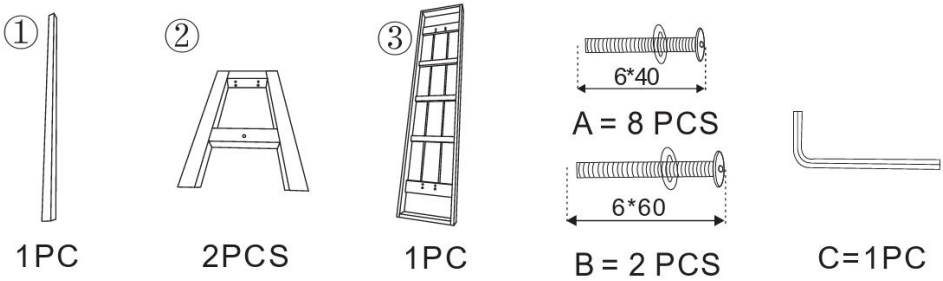

PASOS DE MONTAJE NOTA:

Deje los pernos medio apretados en el banco durante el montaje hasta que la unidad esté ensamblado , luego termine de apretar los pernos ·

PASO 1: tornillo 2 Patas de la silla (②) en la placa del asiento (③) con 8 pernos M 6 X 4 0 ; ayude a mantener el ángulo de las patas de la silla abierto hacia afuera.

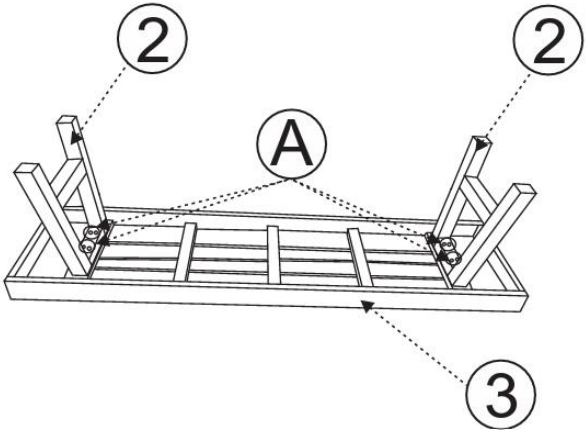

Paso 1

PASO 2 : Atornille la biela de la pata de la silla (①) en o patas de silla (②)

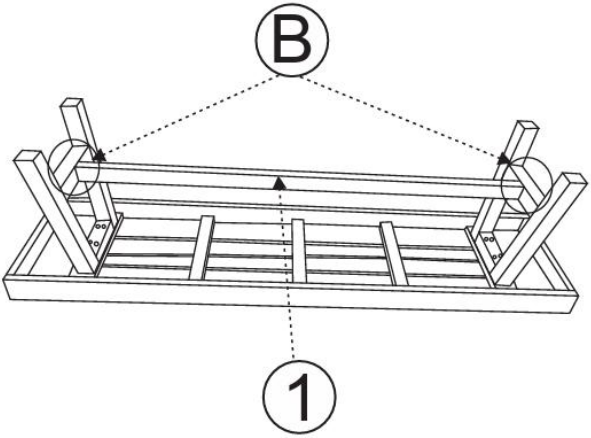

Paso 2

Mantenimiento

1.Compruebe periódicamente el ajuste de los tornillos.

Fabricante : Shanghaimuxinmuyeyouxiangongsi
Dirección: Shuangchenglu 803nong11hao1602A-1609shi, baoshanqu, shanghai 200000 CN.
Importado a AUS: SIHAO PTY LTD. 1 ROKEVA STREETASTWOOD NSW 2122 Australia
Importado a EE. UU.: Sanven Technology Ltd. Suite 250, 9166 Anaheim Lugar, Rancho Cucamonga, CA 91730

UK	REP

E-CrossStu GmbH
Mainzer Landstr.69, 60329 Frankfurt am Main.

EC	REP

YH CONSULTING LIMITED.
C/O YH Consulting Limited Office 147, Centurion House,
London Road, Staines-upon-Thames, Surrey, TW18 4AX

VEVOR®

TOUGH TOOLS, HALF PRICE

Soporte técnico y certificado de garantía electrónica

www.vevor.com/support