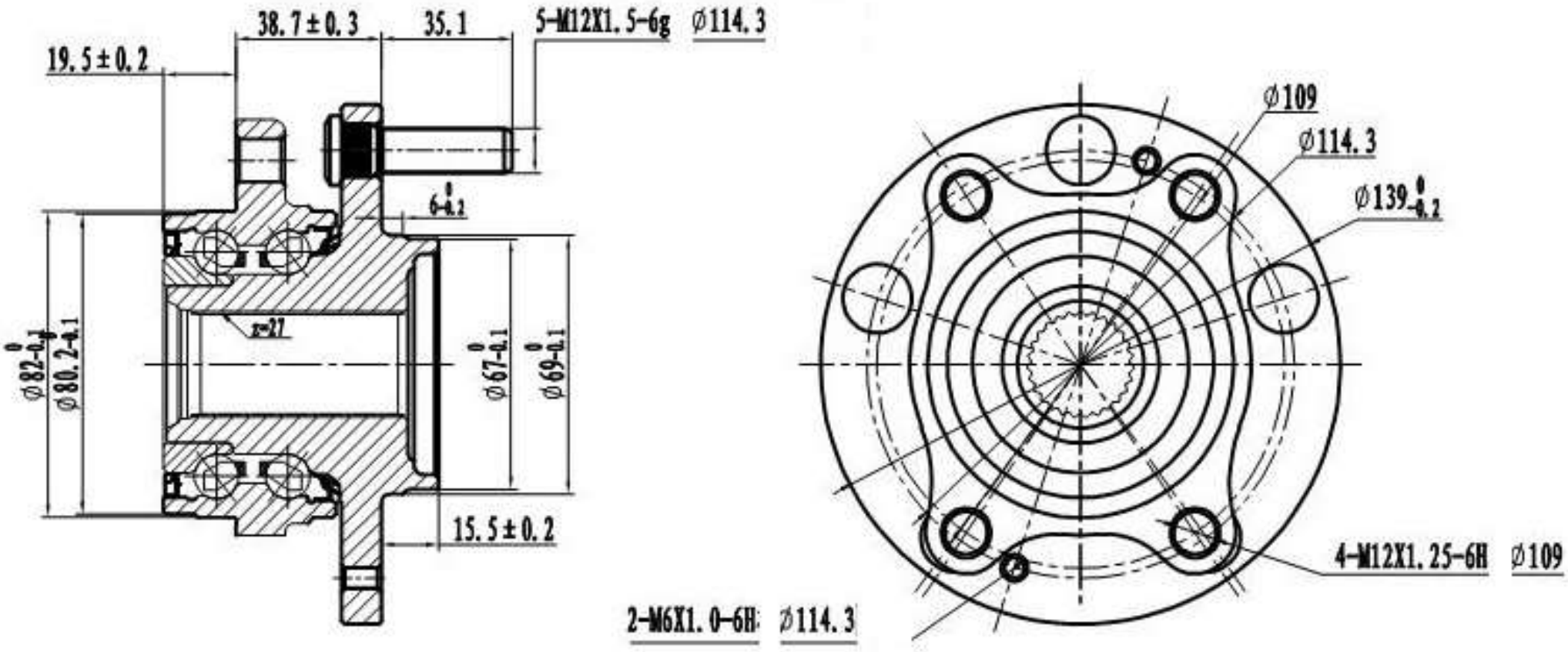
38.7±0.3
35.1
5-M12X1.5-6g
Ø114.3
19.5±0.2
6-0.2
r=27
Ø82-0.1
Ø80.2-0.1
Ø67-0.1
Ø69-0.1
15.5±0.2
Ø109
Ø114.3
Ø139-0.2
4-M12X1.25-6H
Ø109
2-M6X1.0-6H
Ø114.3