VIDEX®

VIDEX 12W 3000K-4000K-6500K 1200Lm Black

INDEX: VL-WL03-12CB

TECHNICAL CARD



LED wall-mounted Light IP65

Pursuant to the provisions of the WEEE Act, it is forbidden to put waste equipment marked with the symbol of a crossed out bin together with other waste. The user, wishing to get rid of electronic and electrical equipment, is obliged to return it to a waste equipment collection point. There are no hazardous components in the equipment that have a particularly negative impact on the environment and human health.

VIDEX®

VIDEX 12W 3000K-4000K-6500K 1200Lm Black

INDEX: VL-WL03-12CB



WARRANTY 2 YEARS

On-mode power (Pon)	12 W
Rated voltage, frequency	AC 220-240 V, 50/60 Hz
Rated current	75 mA
Input interface	Terminal block
Electric shock protection class	II
Displacement factor (cos φ1)	0.7
Survival factor	1
Energy consumption in on-mode of the light source (kWh/1000h)	12

General parameters

Light source or containing product	Light source
Light source replaceable	no

Type of light source

Energy class of the light source	F
Dimmable	no
Directional (DLS) or non-directional (NDLS) light source	NDLS
Connected light source (cls)	no
Color-tunable light source	yes
High luminance light source	No
Mains (MLS) or non-mains (NMLS) light source	MLS
Anti-glare shield	No
Technology	LED

Electrical parameters

Photometric parameters

Correlated color temperature	6500K (cold white), 4000K (neutral white), 3000K (warm white)
Beam angle	120°
Color rendering index (CRI)	Ra > 80
On/Off cycles	15000
Lifetime (L70B50)	25000 h
Useful luminous flux of the light source reference	in a sphere (360°)
R9 colour rendering index value	>0
The lumen maintenance factor	≥94.8%
Flicker metric (Pst LM)	≤1
Stroboscopic effect metric (SVM)	≤0.4
Colour consistency in MacAdam ellipses (SDCM)	<6 (3000K), <6 (4000K), <6 (6500K)
CRI Min	Ra 80

VIDEX 12W 3000K-4000K-6500K 1200Lm Black

INDEX: VL-WL03-12CB

CRI Max	Ra 88

Additional information

Place of installation	Flat surface, Wall
Place of application	indoor, outdoor
Impact protection	IK06
Housing colour	Black
Diffuser material	Polycarbonate (PC)
Minimum distance from the illuminated object	0.5 m
Ultraviolet radiation	no
Motion sensor	no
Operating temperature range	-20° +50°C
Suitable for installation in normally flammable surfaces	yes
Mercury content	Does not contain
Ingress protection	IP65
Housing material	Plastic

Dimensions

EAN	4820246487962
In the package	1 pc.
Height	180 mm
Outer box	20 pcs.
Width	180 mm
Depth	47 mm
Unit nett weight	250g

Signs marking goods

Packaging marking	CE, Utilization





VIDEX®

VIDEX 12W 3000K-4000K-6500K 1200Lm Black

INDEX: VL-WL03-12CB









VIDEX®

VIDEX 12W 3000K-4000K-6500K 1200Lm Black

INDEX: VL-WL03-12CB



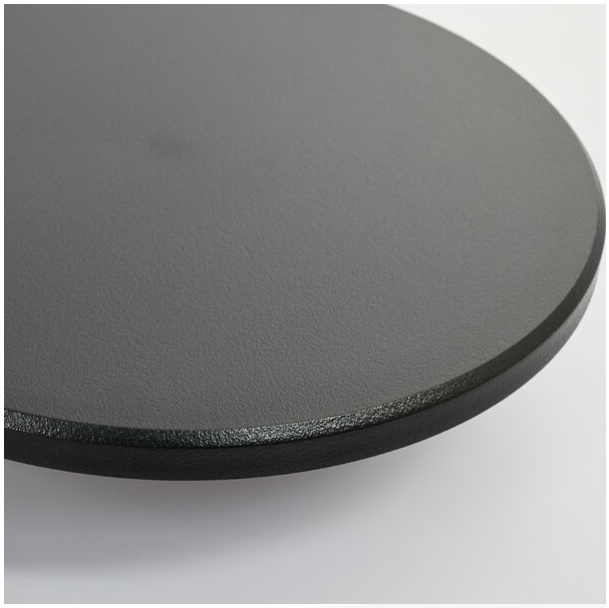





VIDEX®

VIDEX 12W 3000K-4000K-6500K 1200Lm Black

INDEX: VL-WL03-12CB



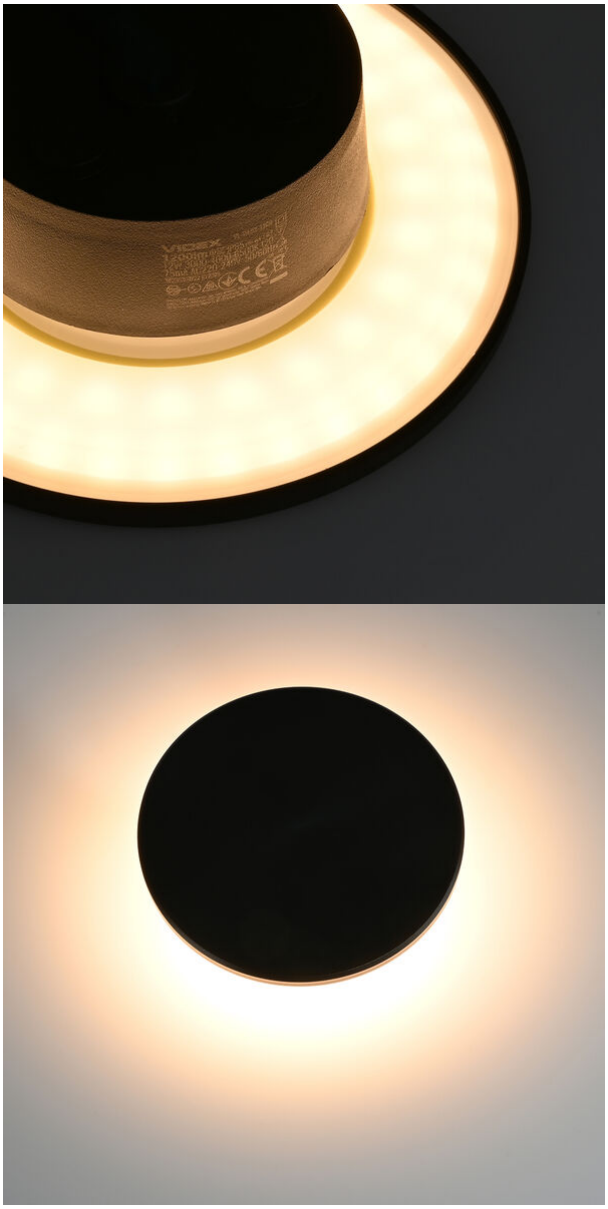

VIDEX®

VIDEX 12W 3000K-4000K-6500K 1200Lm Black

INDEX: VL-WL03-12CB



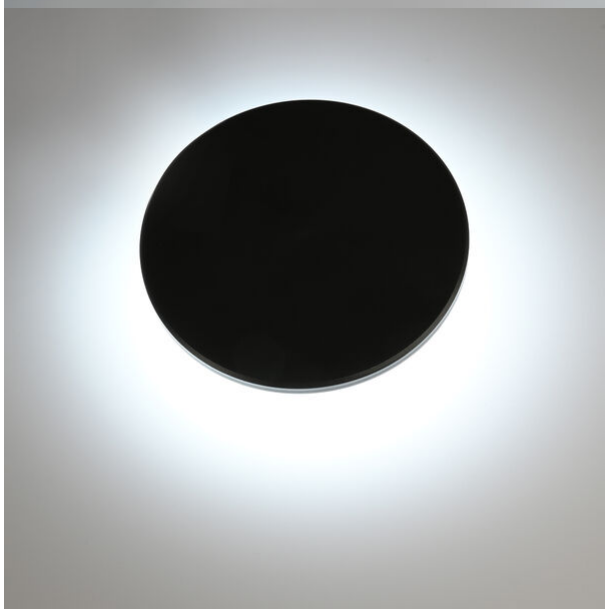

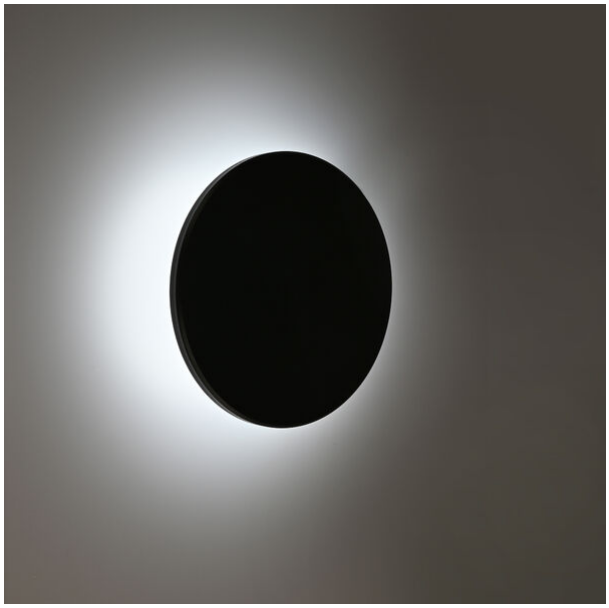

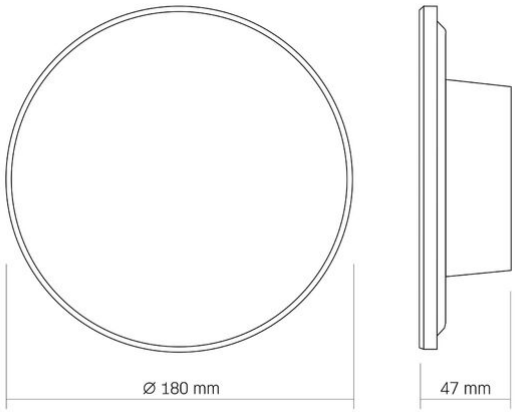

We reserve the right to make technical changes. The data contained in this material is not legally binding.

Allegro opt Sp. z o.o., ul. Mierzeja Wiślana 11, 30-732 Krakow, Poland.

VIDEX®

VIDEX 12W 3000K-4000K-6500K 1200Lm Black

INDEX: VL-WL03-12CB


The product must be used indoors


The product must be used outdoors


Class of protection against electric shock II - provided not only by basic insulation but also by double or reinforced insulation



Minimum distance from the illuminated object



The product can be installed and used in/on normally flammable surfaces


The product meets the requirements of EU directives


It is forbidden to throw away waste equipment marked with the symbol of a crossed-out bin with other waste



— Rated beam angle



— Ra > 80 – color rendering index



— Nominal lifetime (hours)



— The product does not emit ultraviolet light



— The product is incompatible with light regulators



— Operating temperatures range



— The flickering of the light does not exceed the permissible level



— The product has minimal flickering, which should not cause discomfort or danger



— Colour consistency in MacAdam ellipses (SDCM)



— Colour consistency in MacAdam ellipses (SDCM)



— Colour consistency in MacAdam ellipses (SDCM)



— The product does not contain mercury



— Class of protection against dust and moisture. The product has full protection against dust and water jets from all directions

Date: 25.11.2025