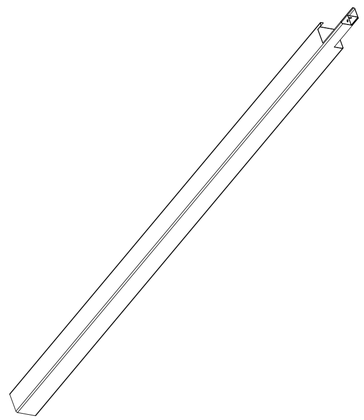

A:4PCS

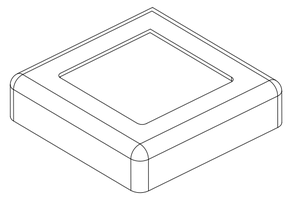

B:4PCS

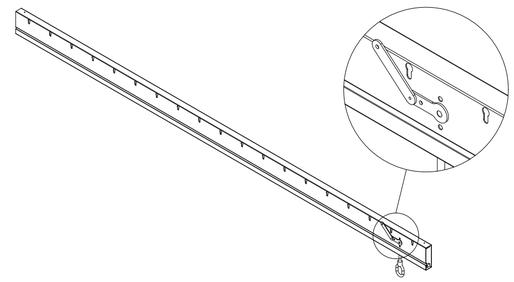

C:1PC

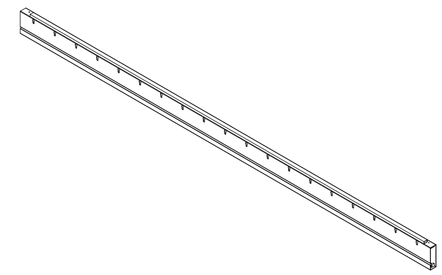

D:1PC

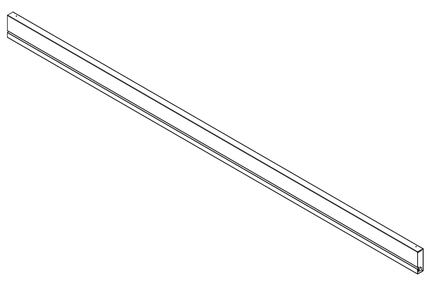

E:2PCS

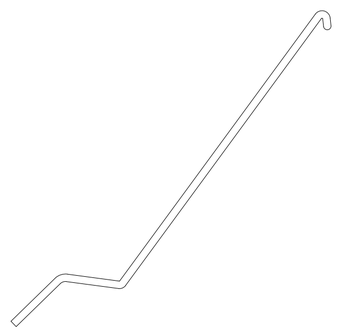

F:1PC

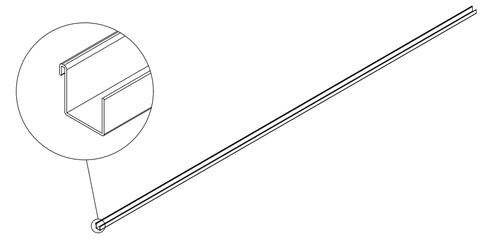

G:4PCS

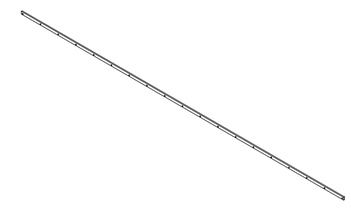

H:1PC

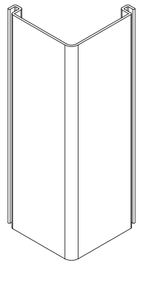

I:4PCS

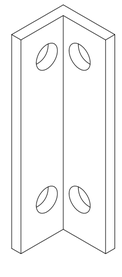

J:4PCS

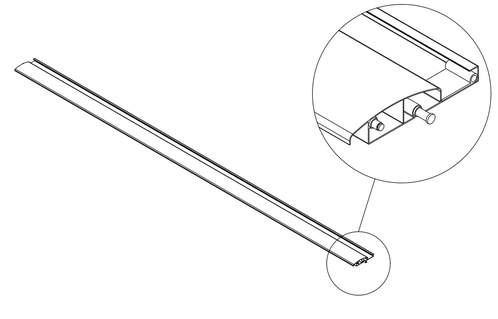

K:1PC

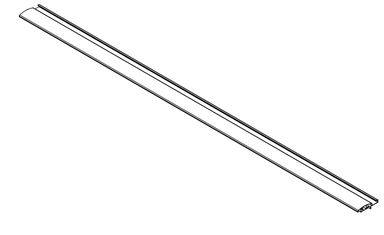

L:18PCS

M:(Φ16*Φ6.5*1)8PCS

N:19PCS

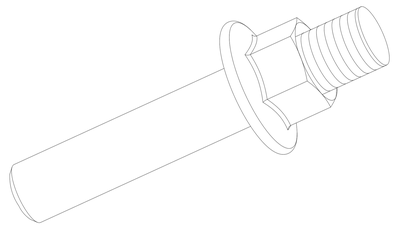

O:12PCS

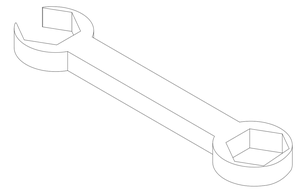

P:1PC

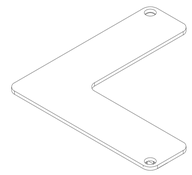

Q:4PCS

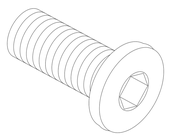

R:M6*15*9PCS

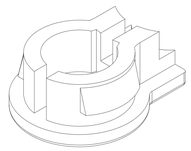

S:38PCS

T:(Φ16*Φ8.5*1)16PCS

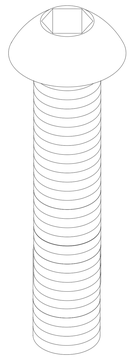

U:M8*70*16PCS

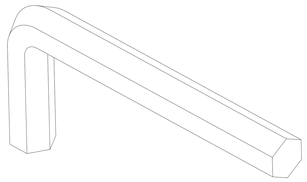

V:5MM*1PC

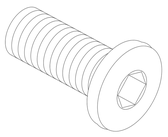

W:M6*35*13PCS

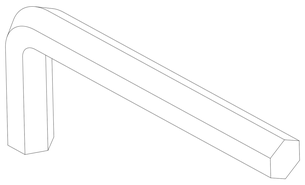

X:4MM

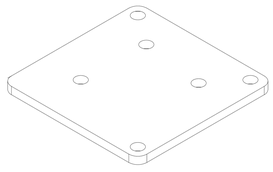

Y:4PCS

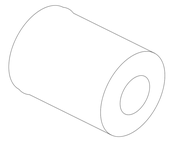

Z: 1PCS

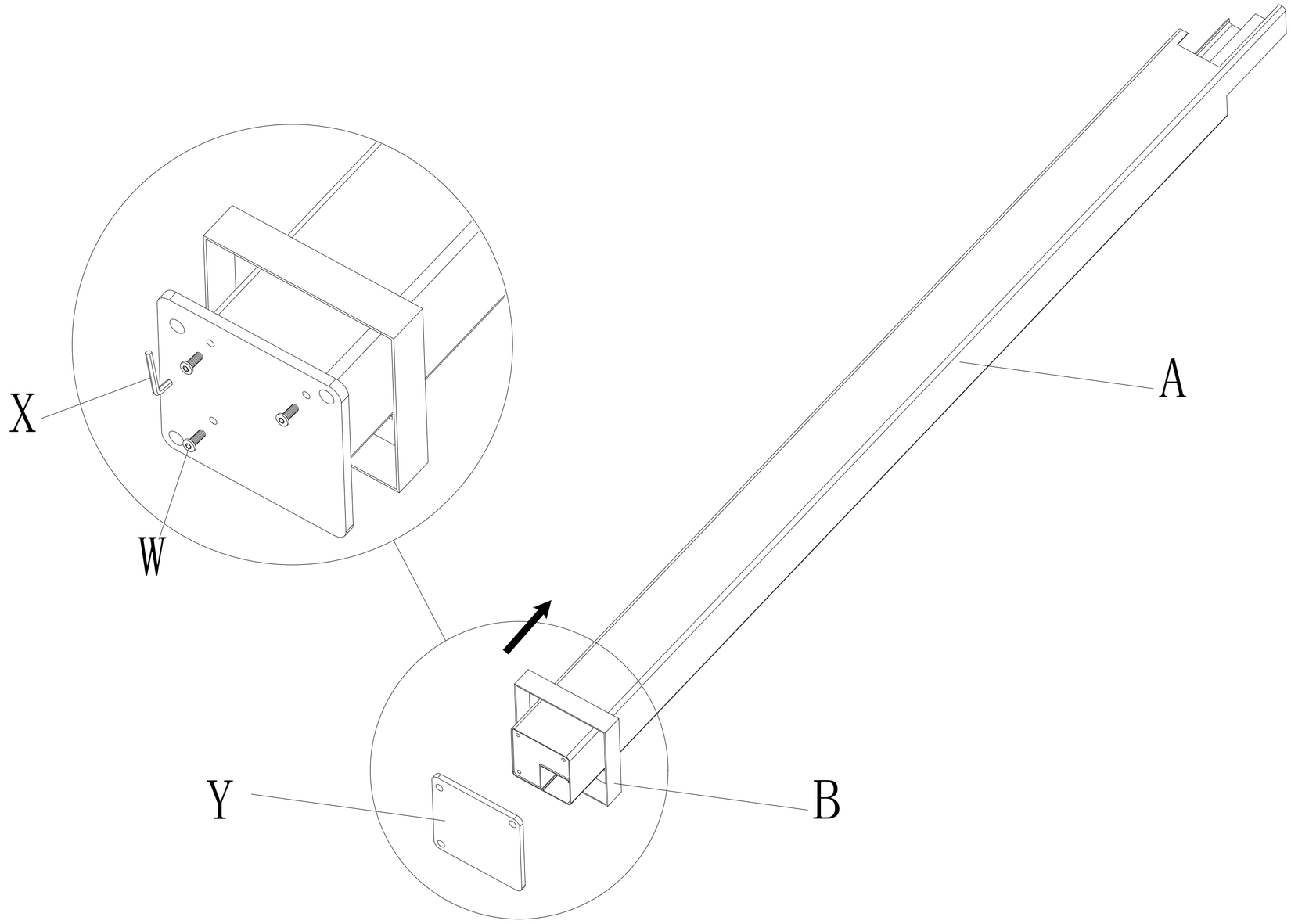

1

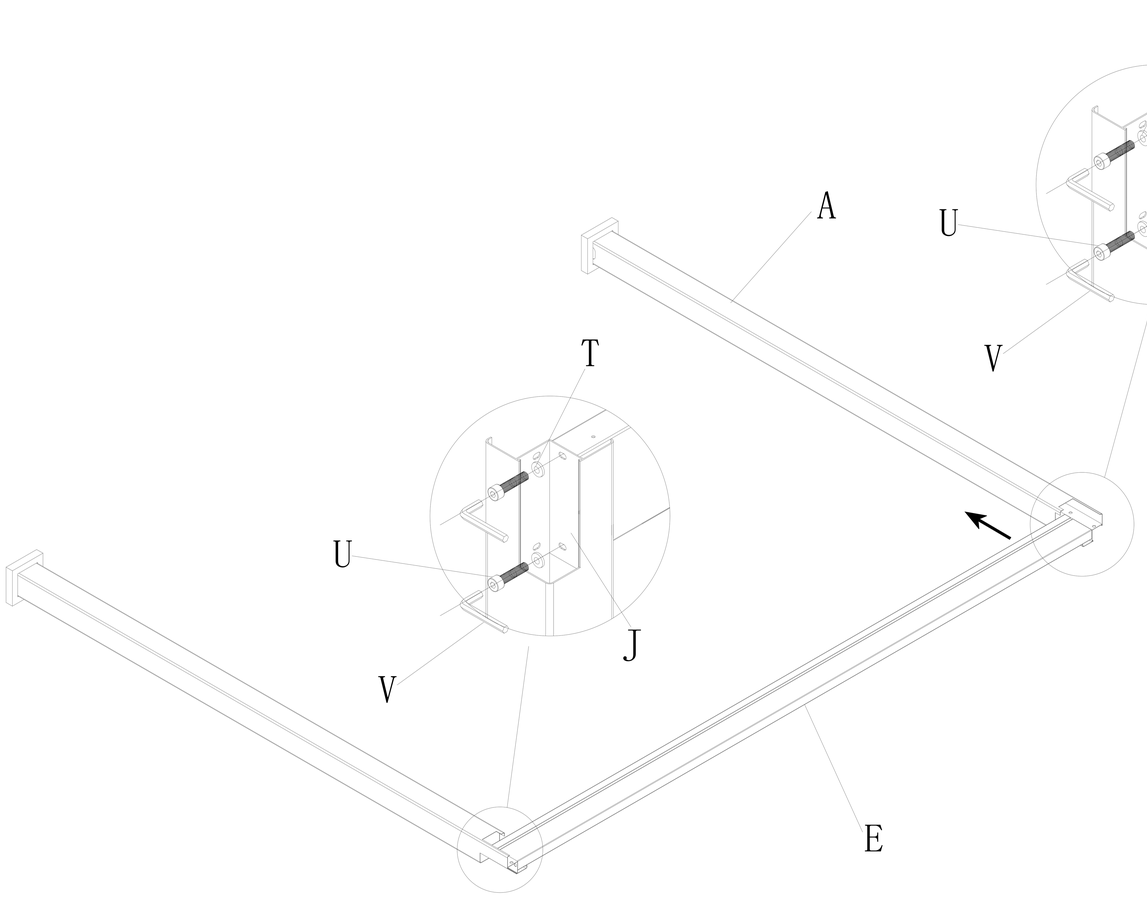

1

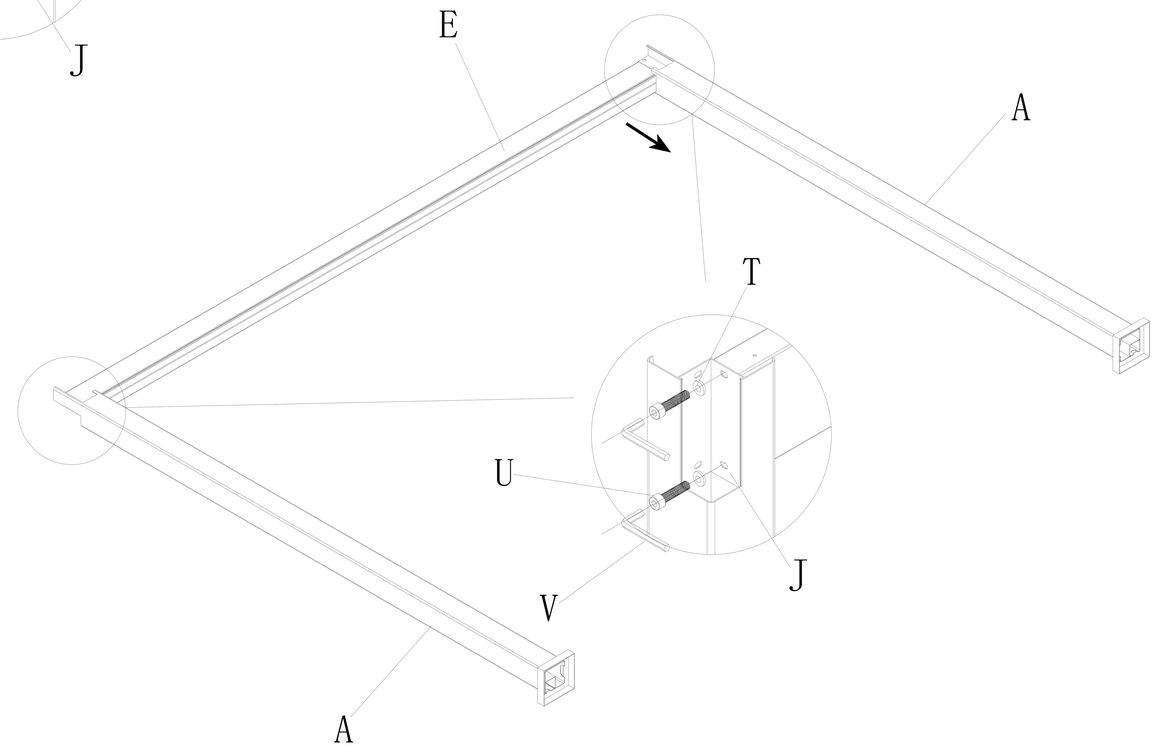

2

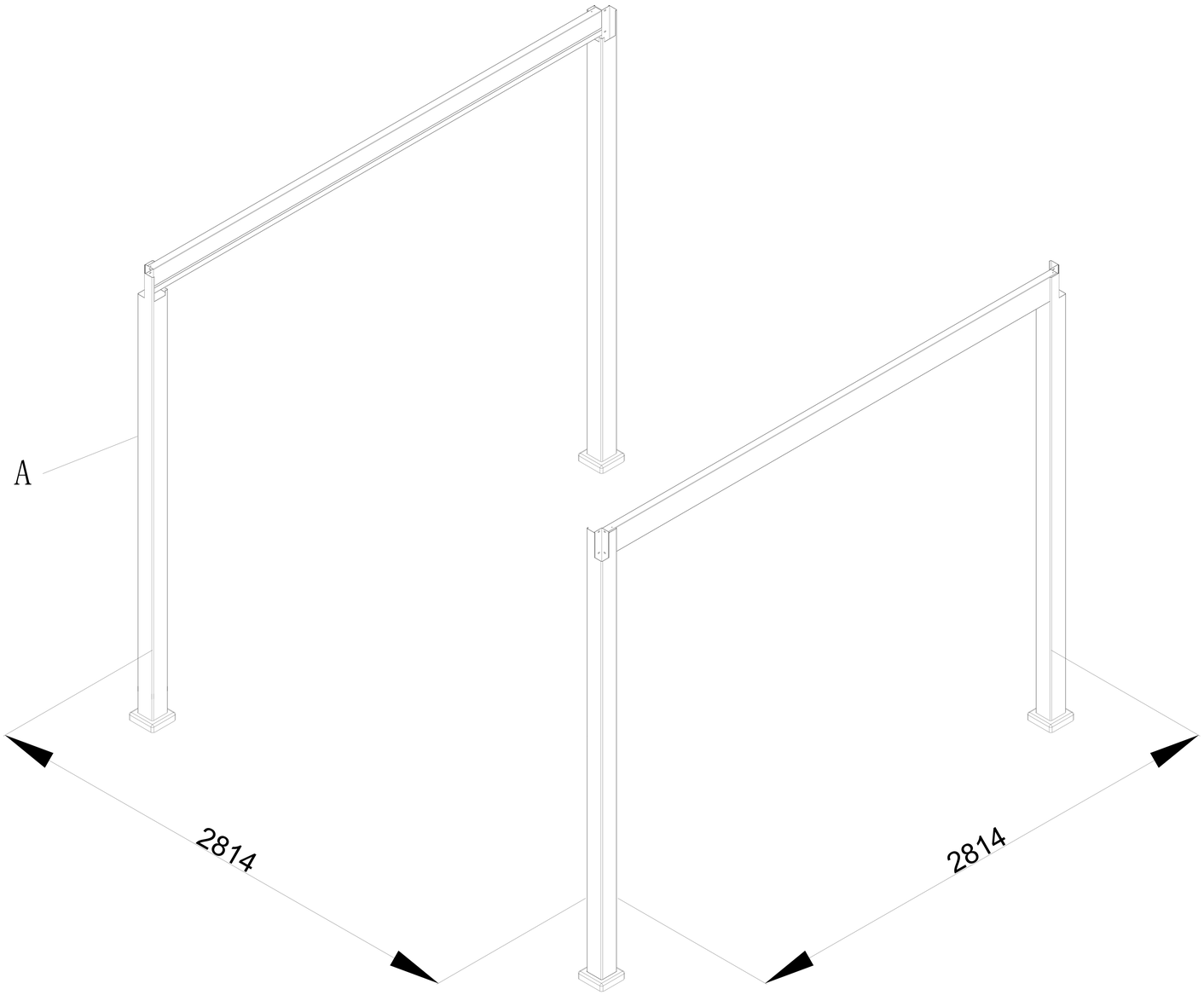

1

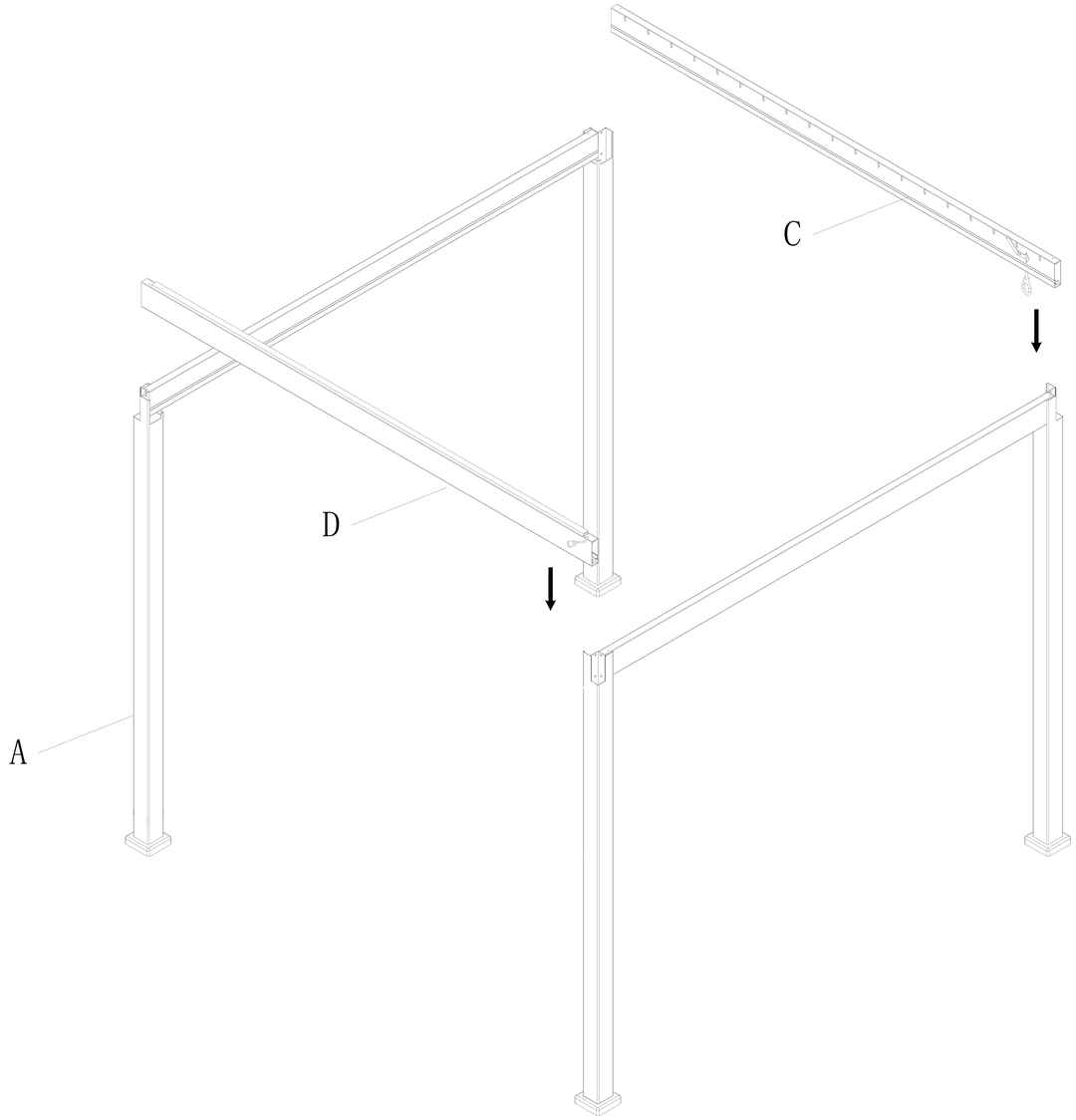

1

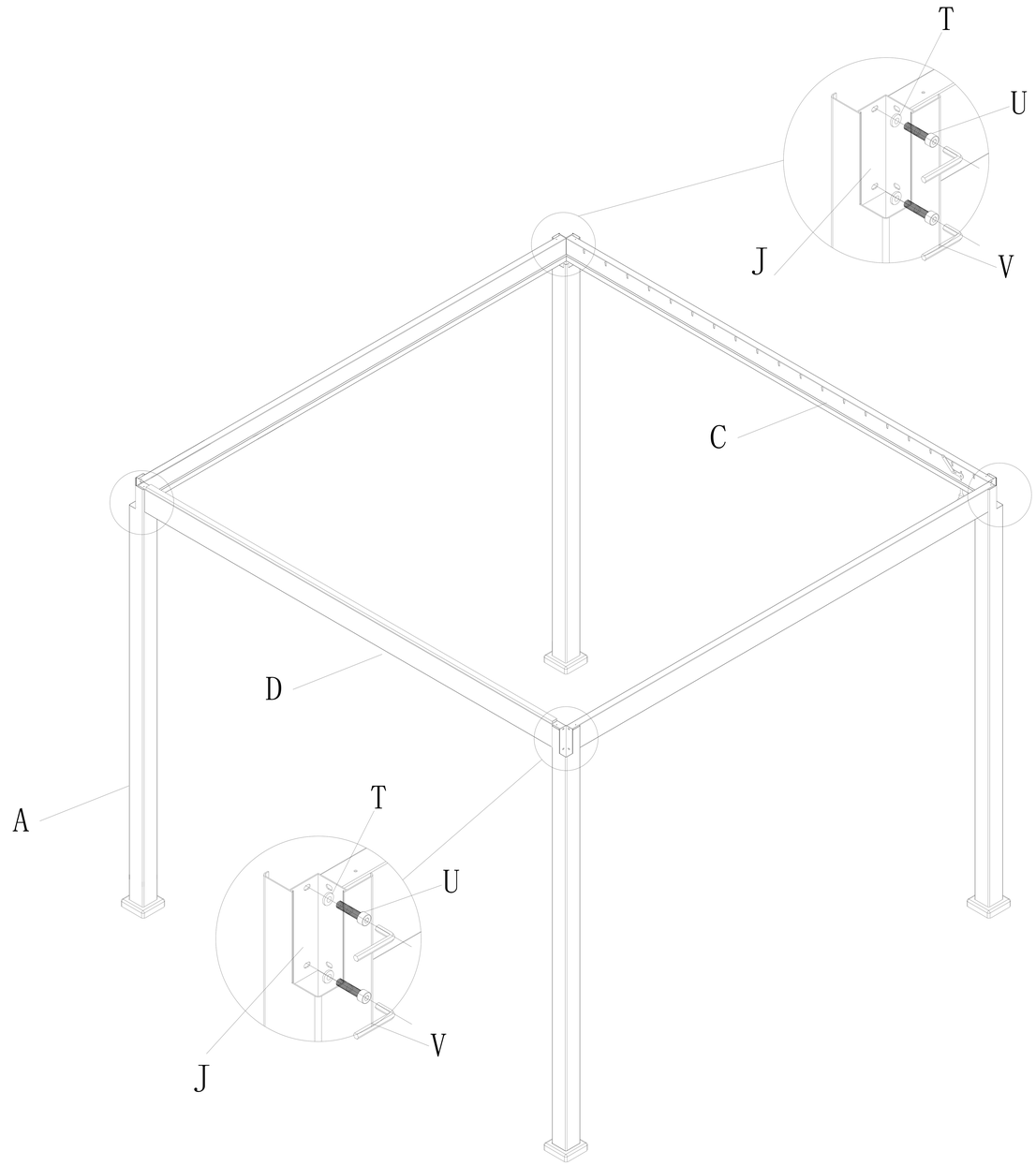

2

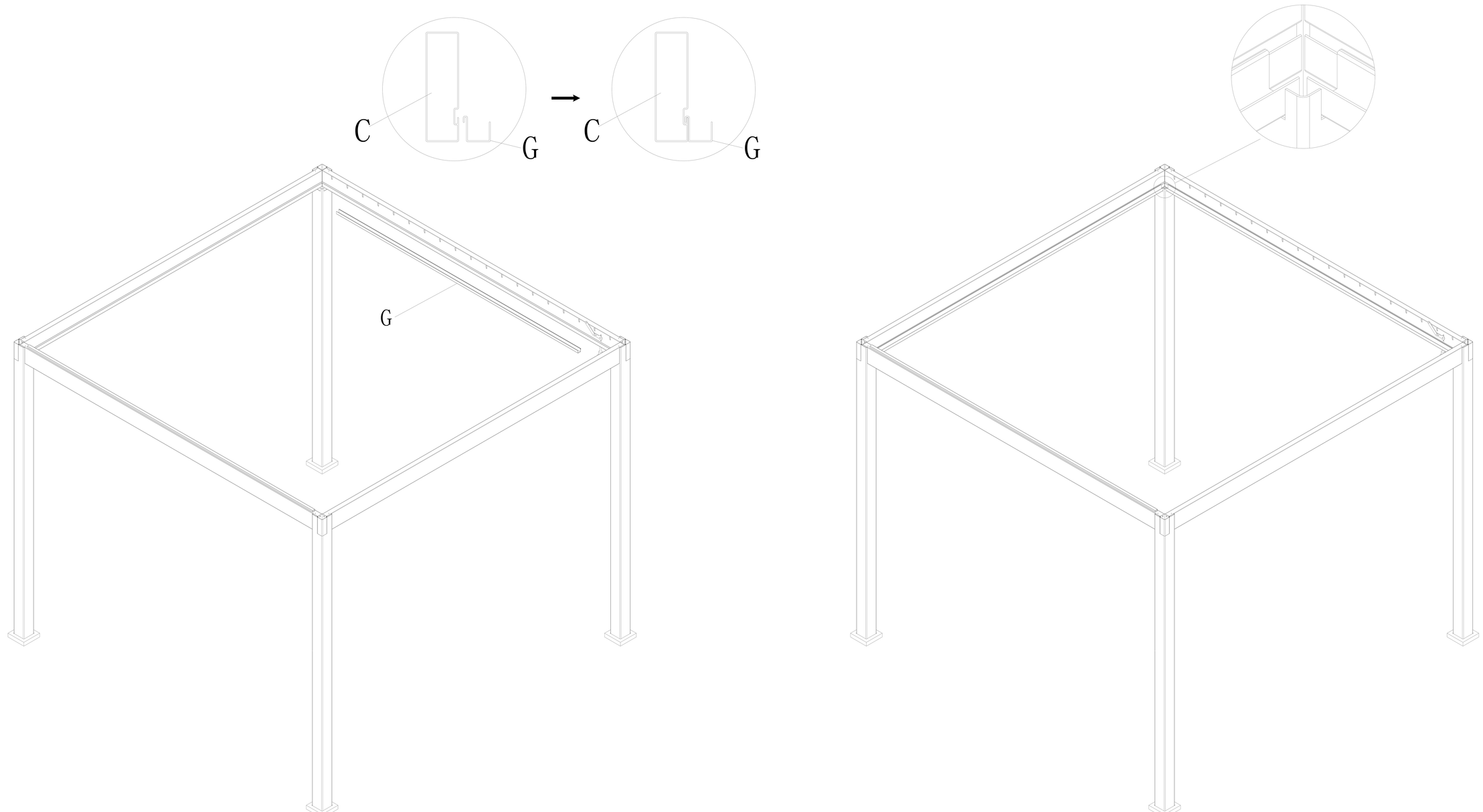

1

2

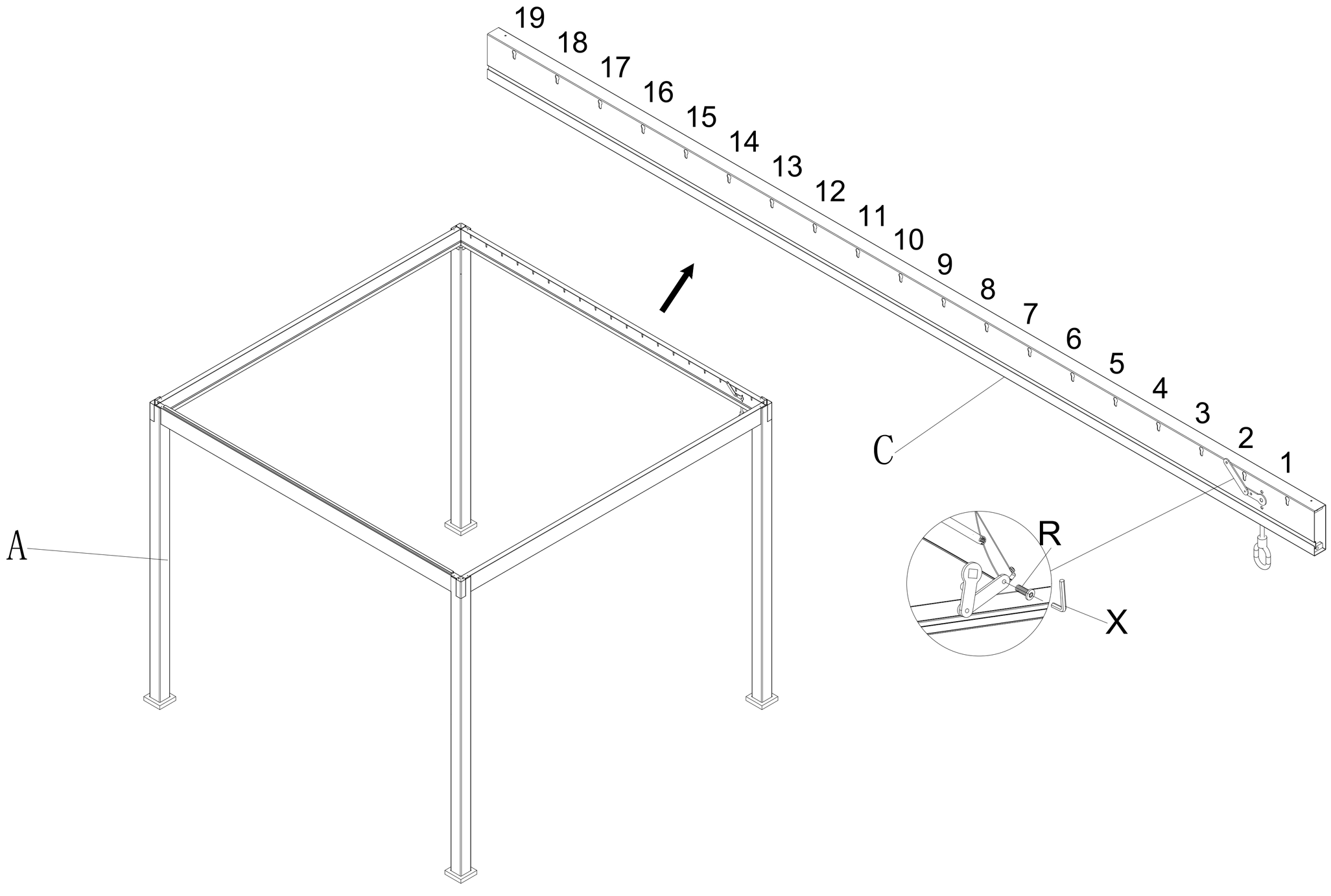

1

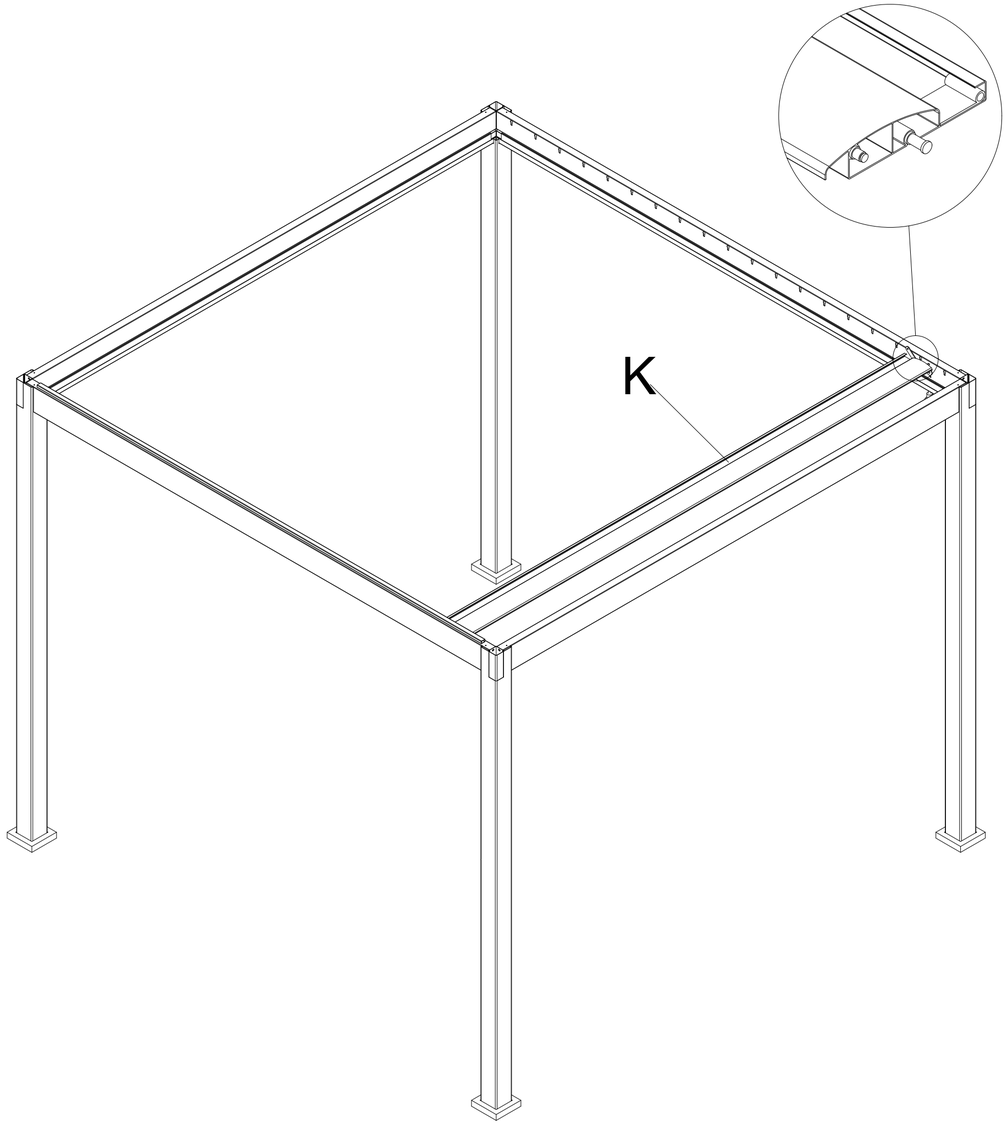

1

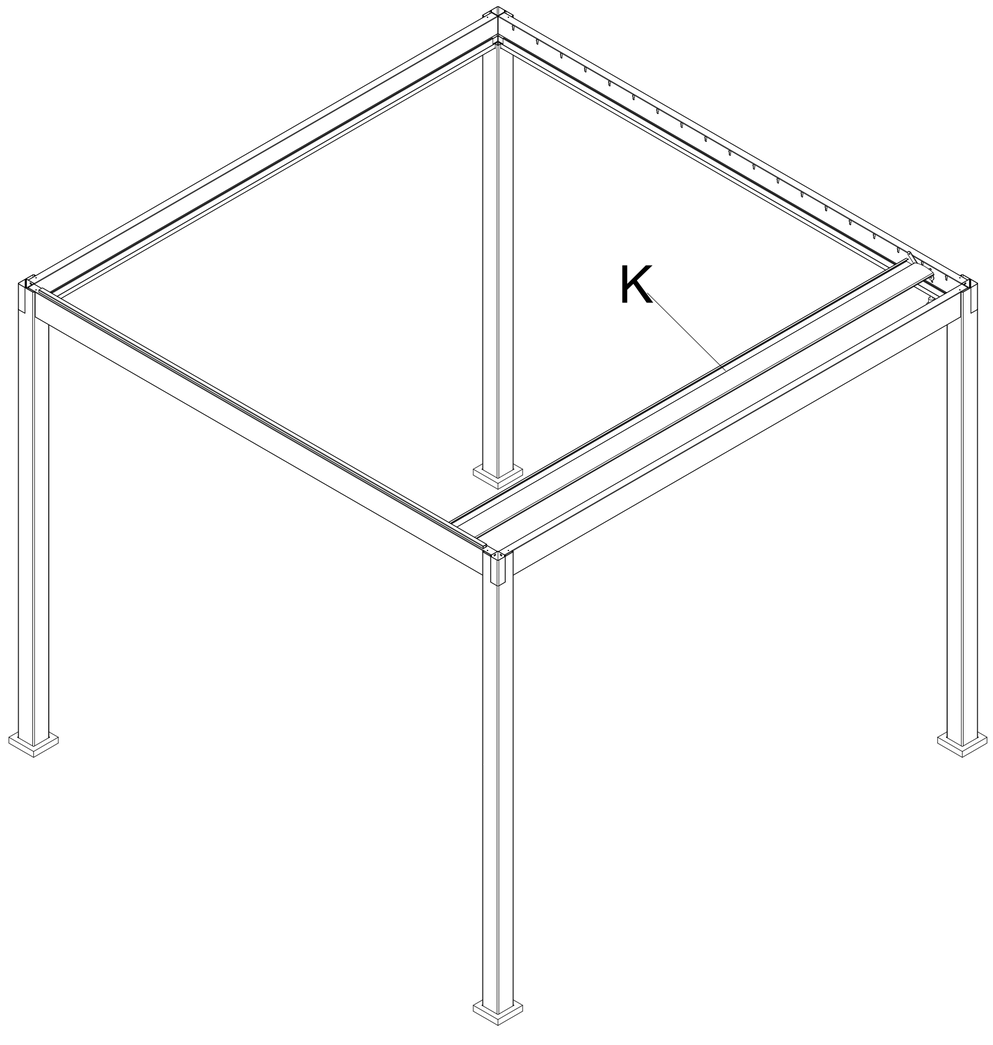

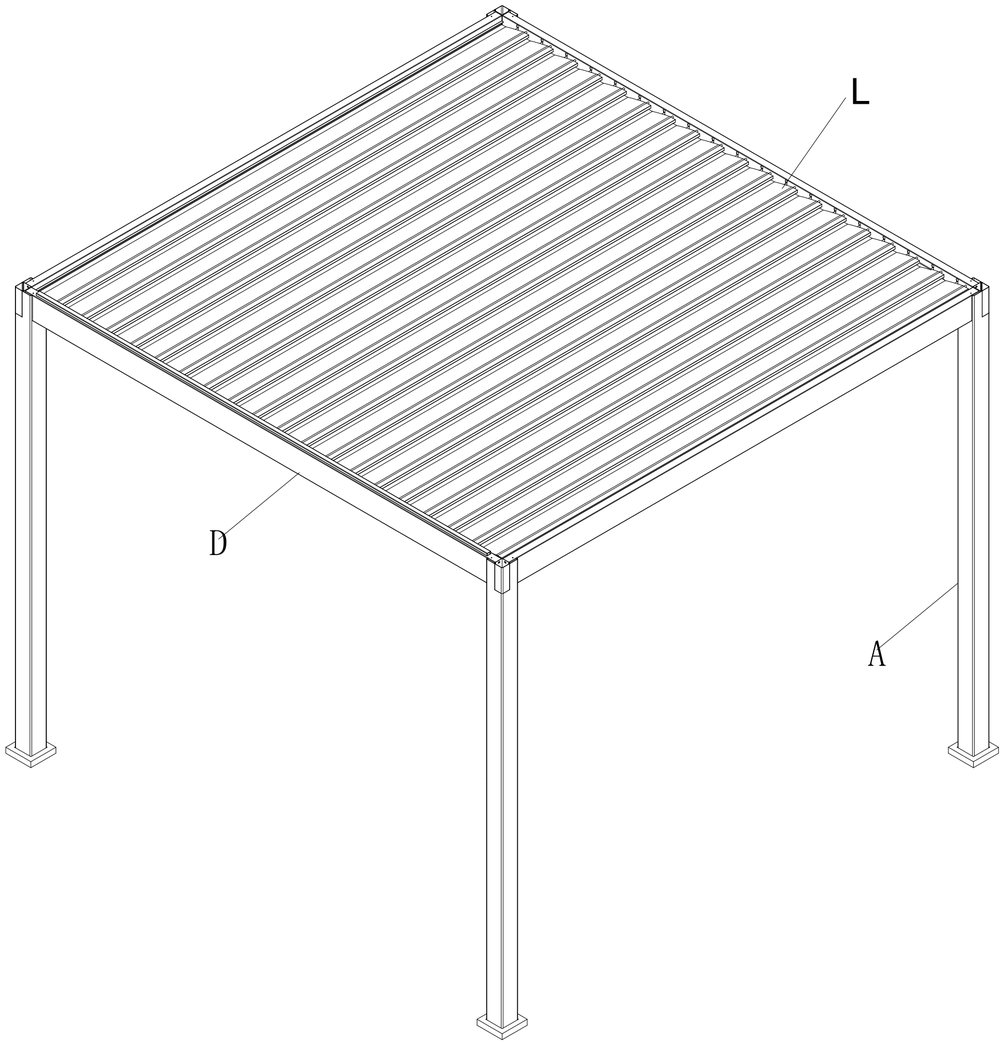

1

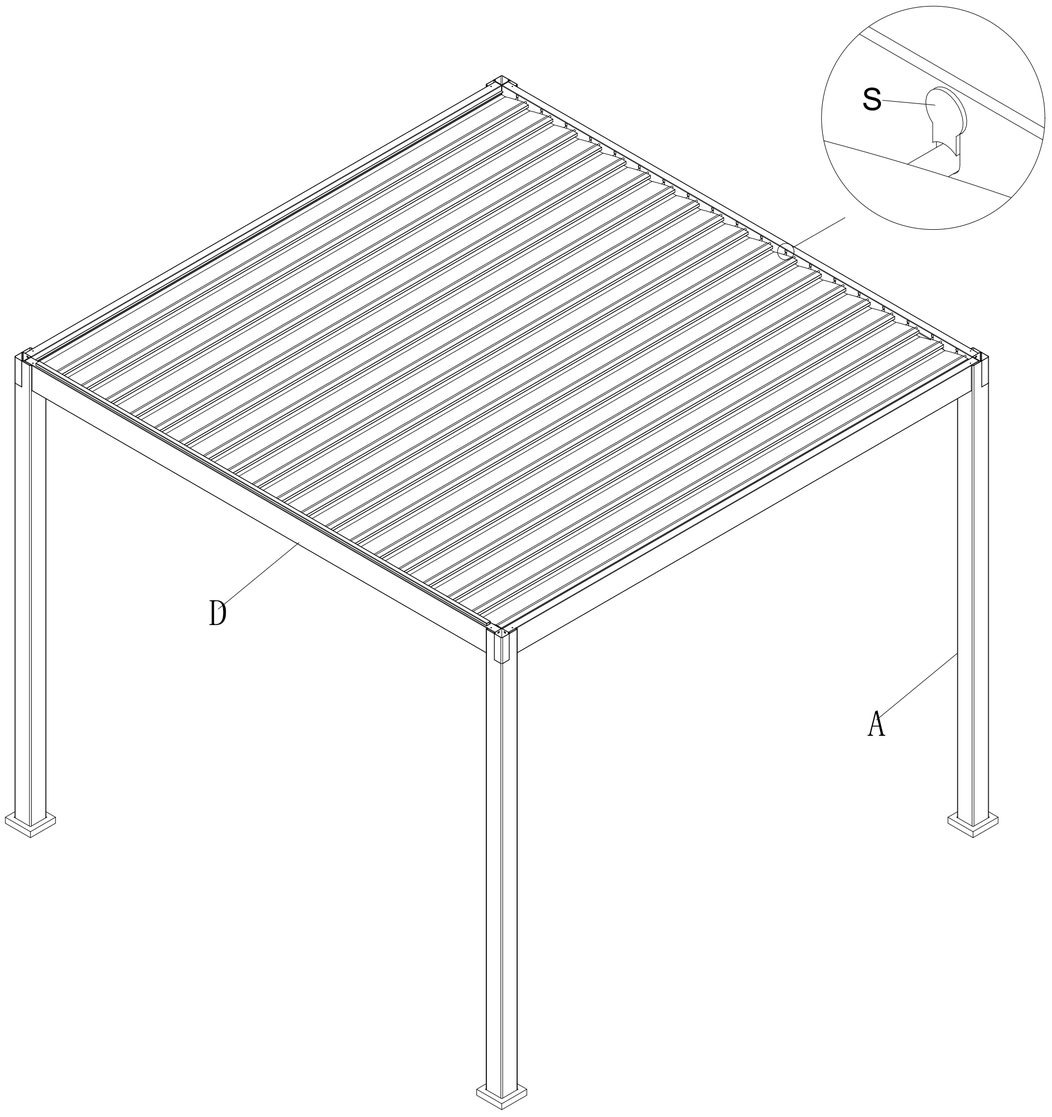

2

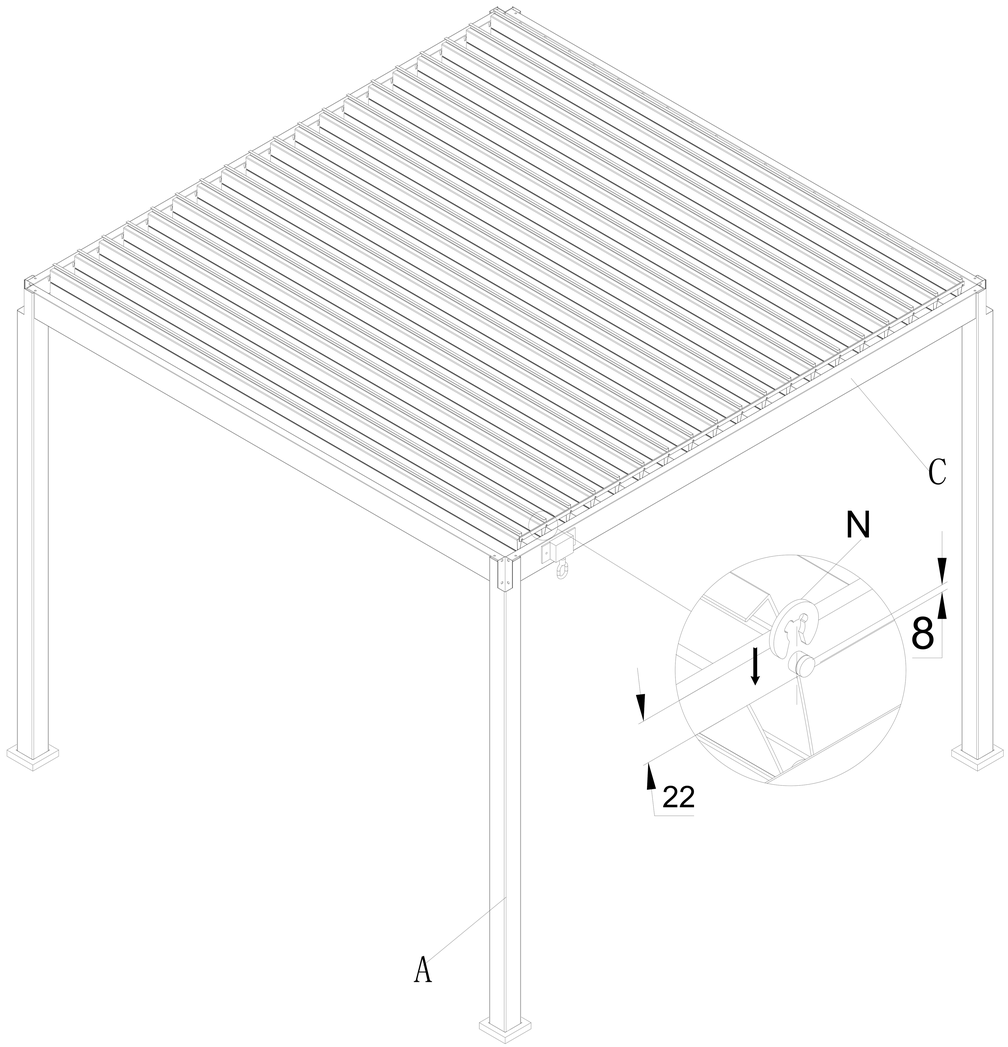

1

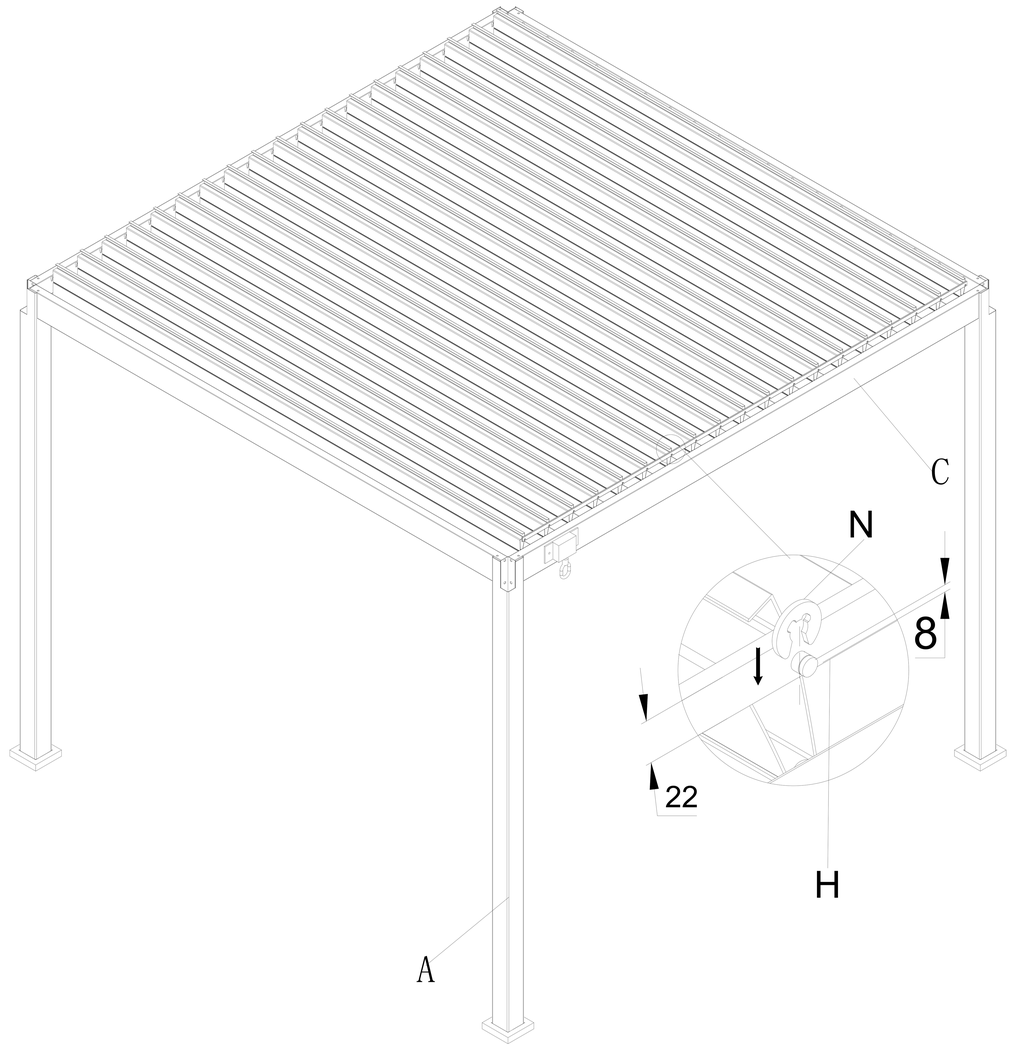

2

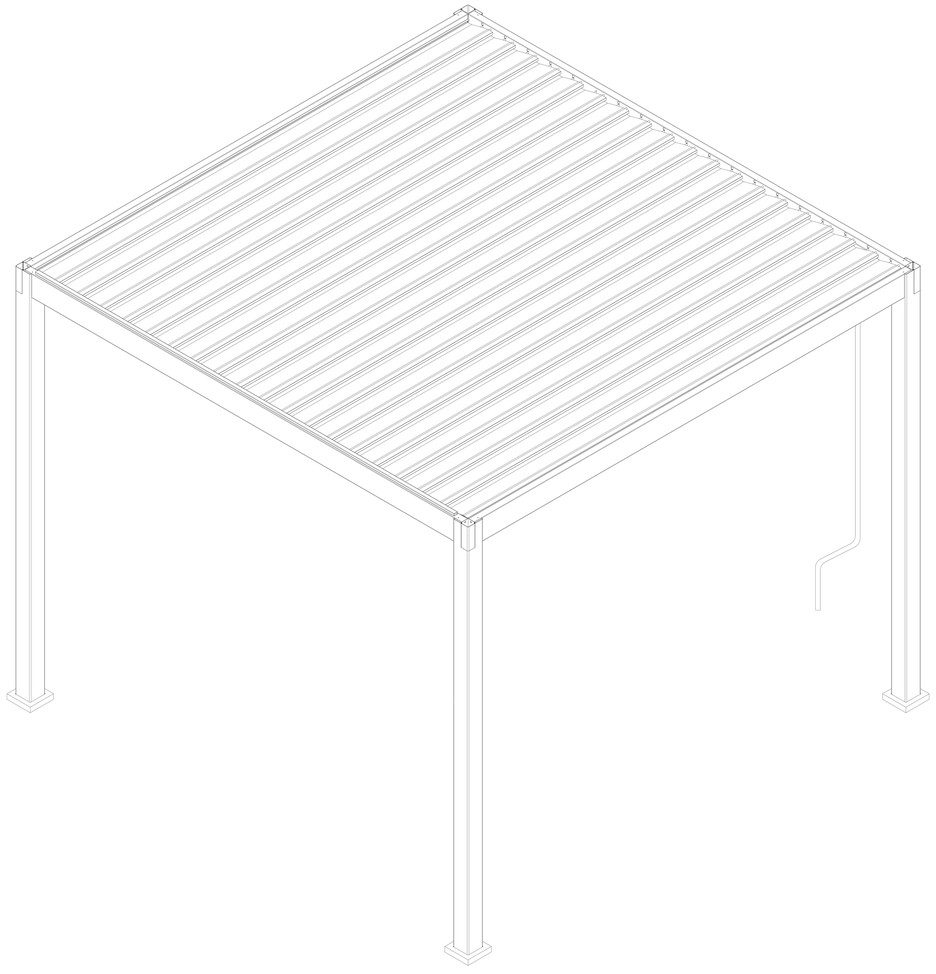

3 Per

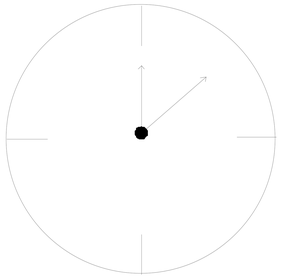

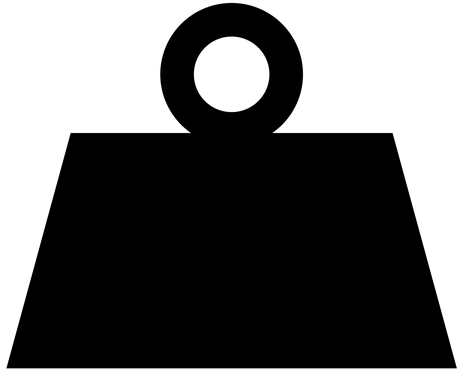

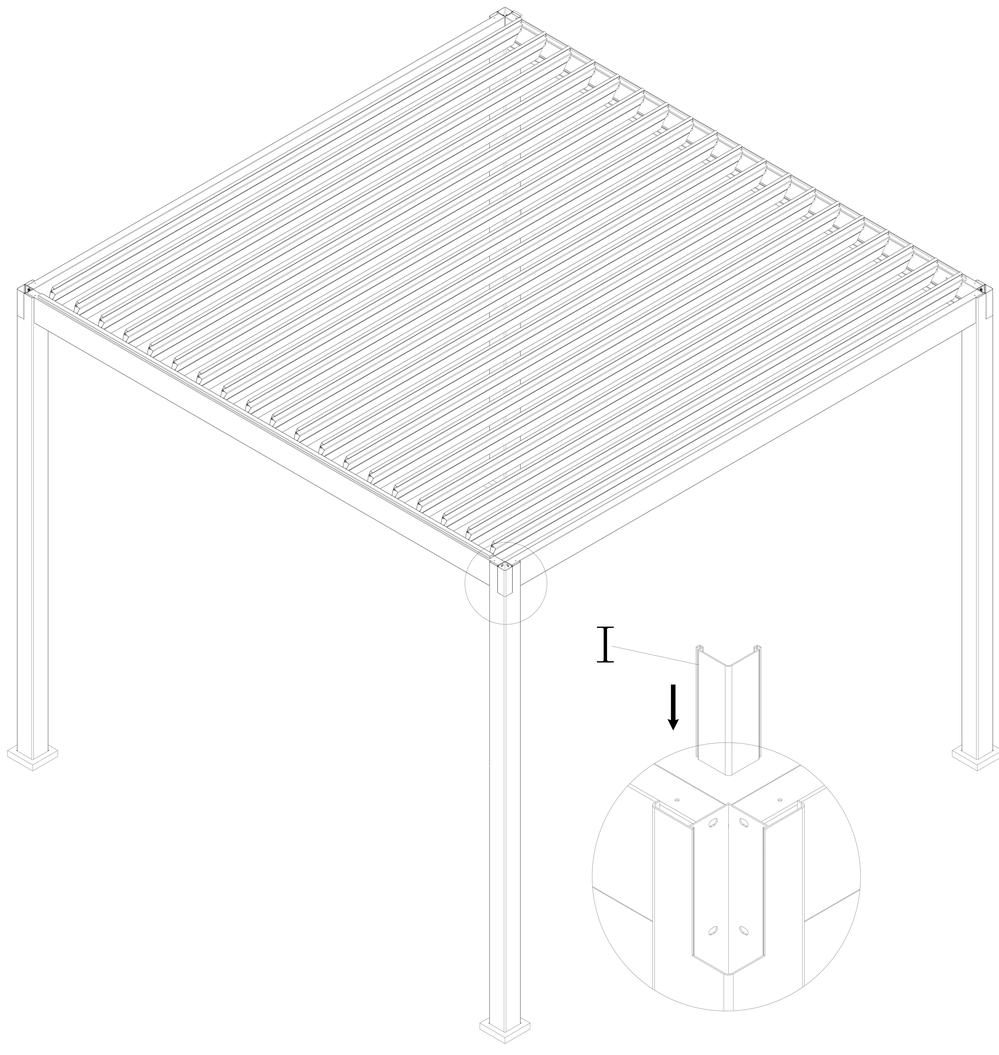

1

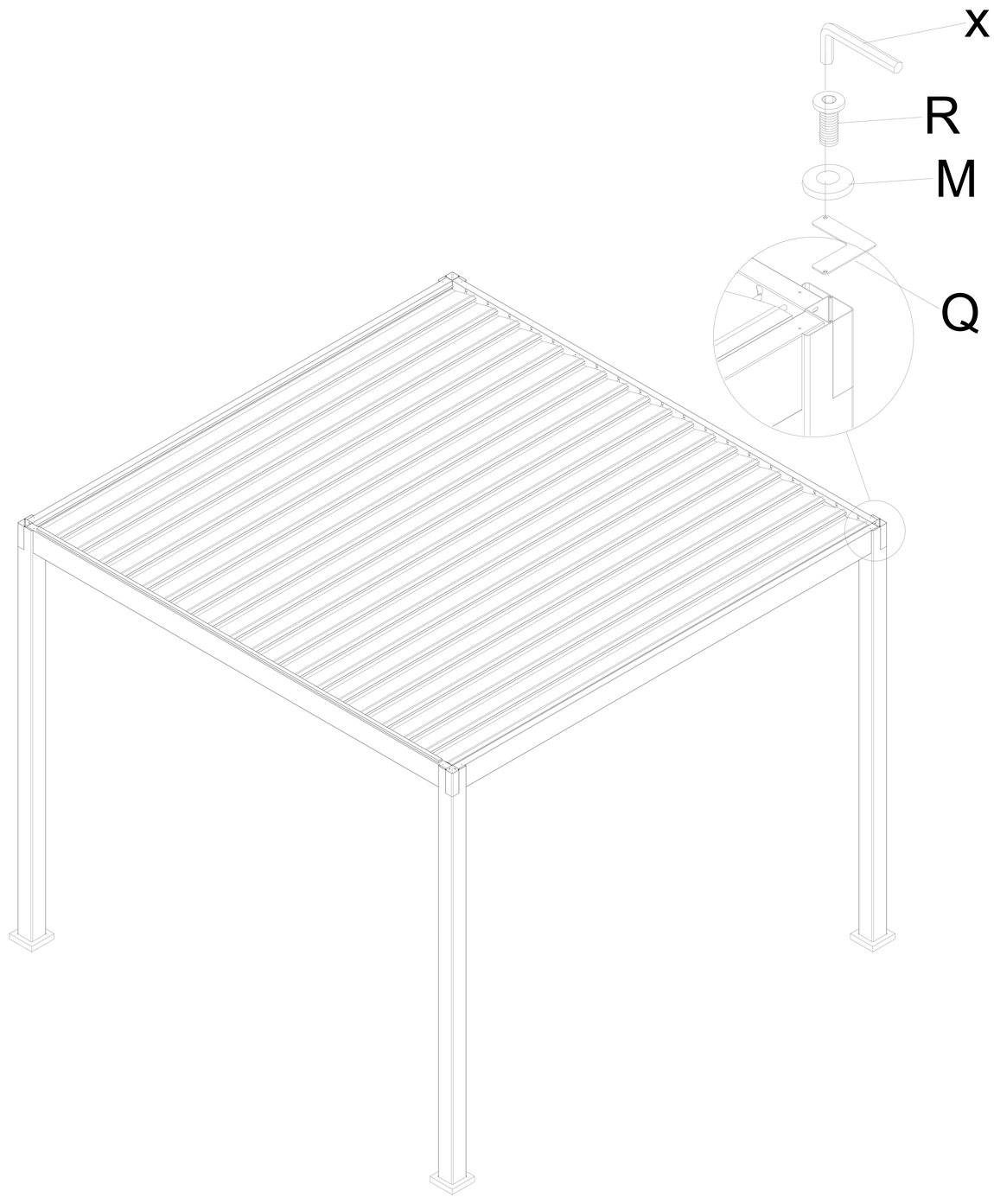

2

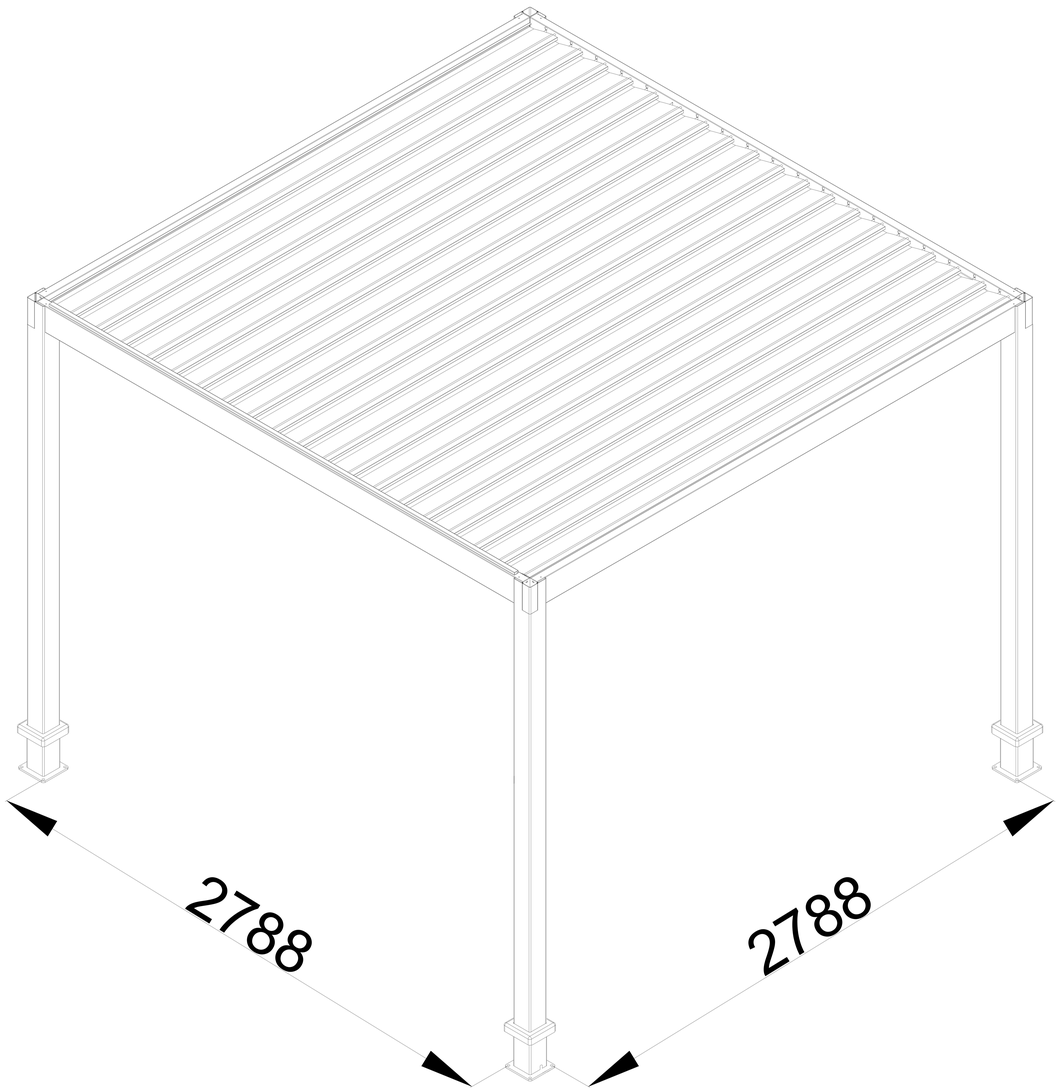

1

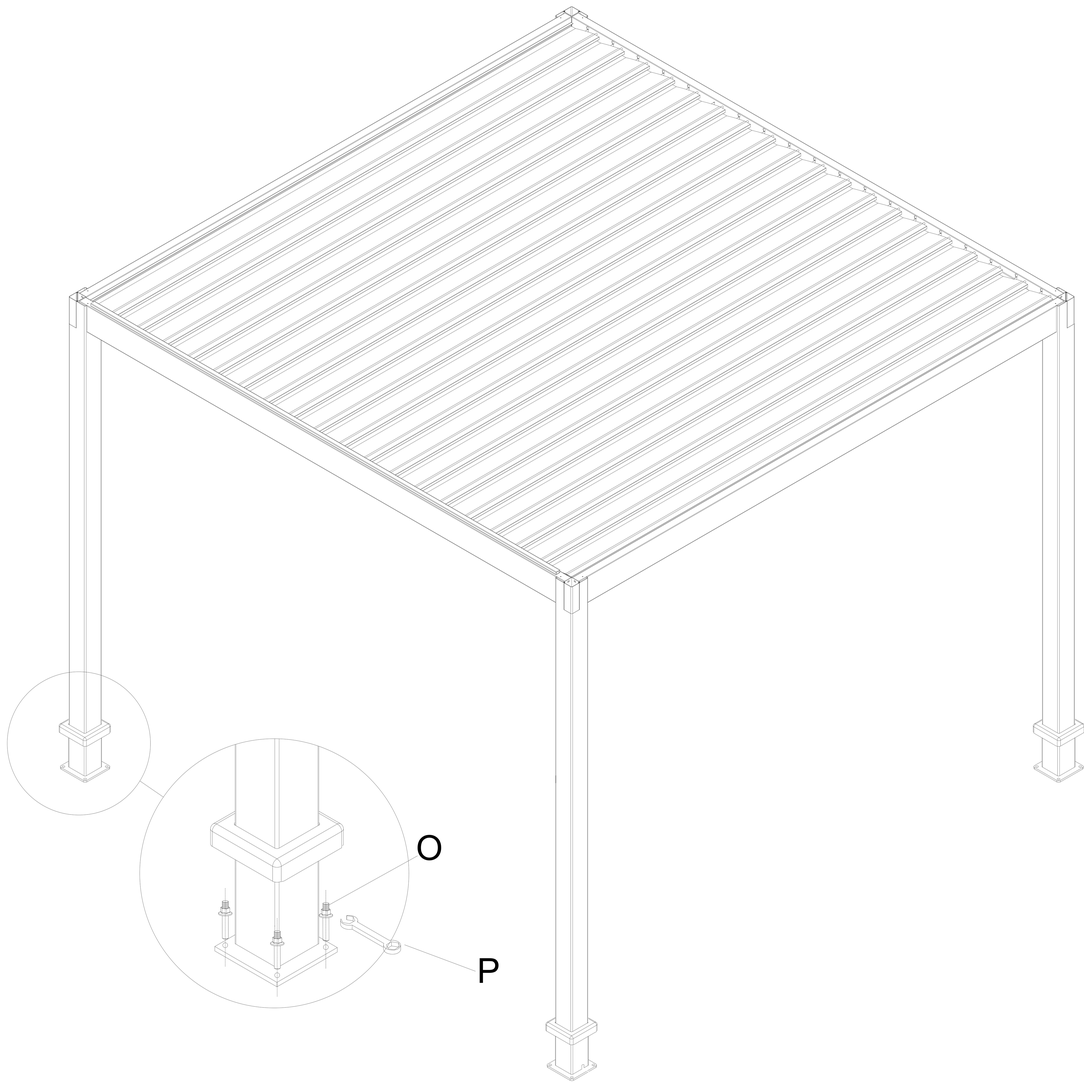

2

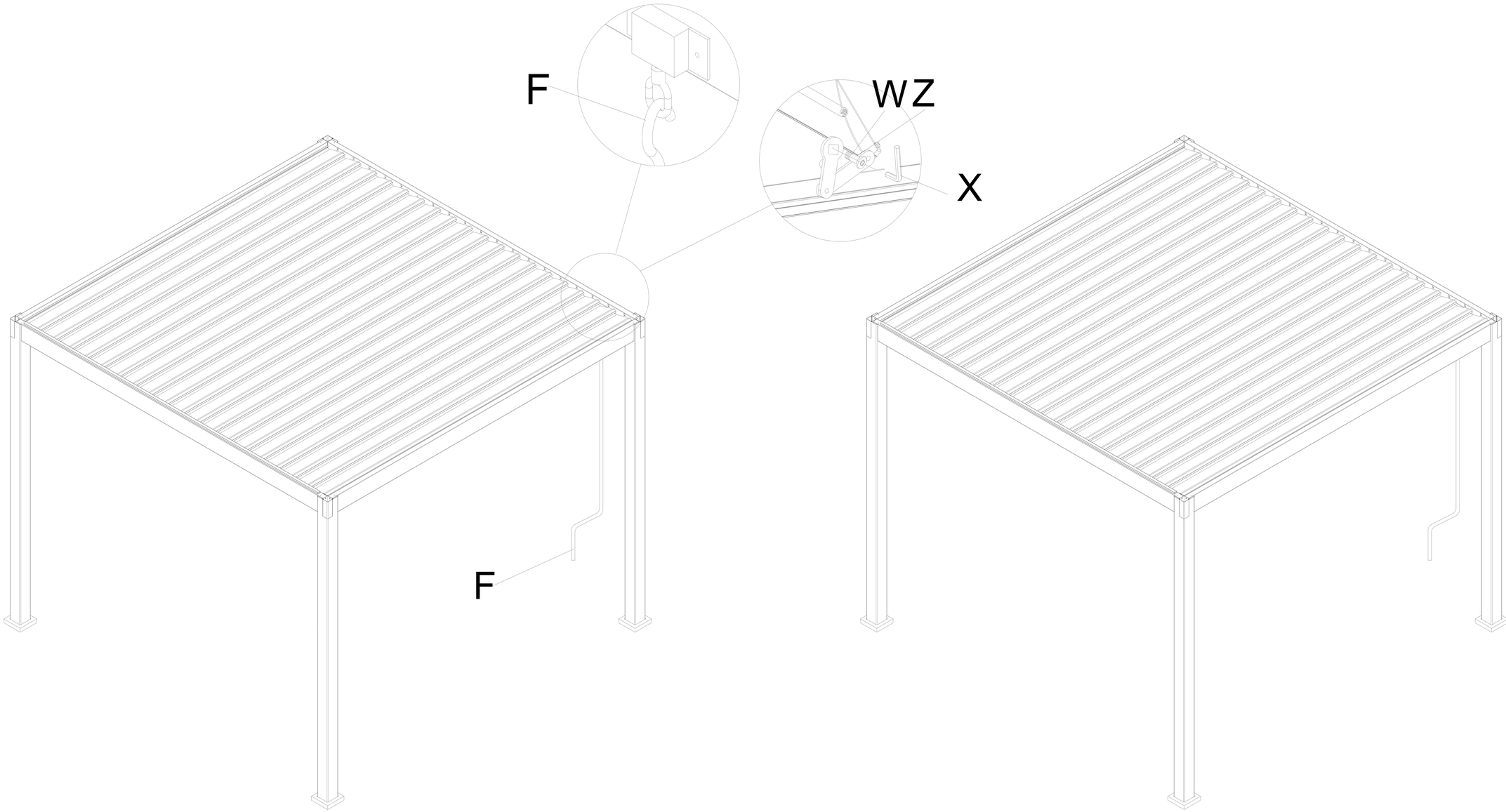

1

2