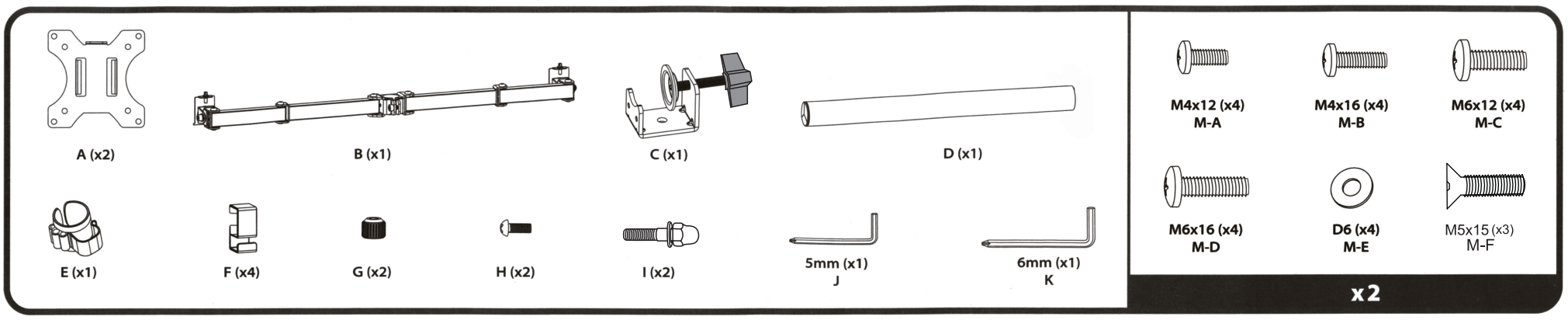
A (x2)
B (x1)
C (x1)
D (x1)
E (x1)
F (x4)
G (x2)
H (x2)
I (x2)
5mm (x1)
J
6mm (x1)
K
M4x12 (x4)
M-A
M4x16 (x4)
M-B
M6x12 (x4)
M-C
M6x16 (x4)
M-D
D6 (x4)
M-E
M5x15 (x3)
M-F
x2

1a

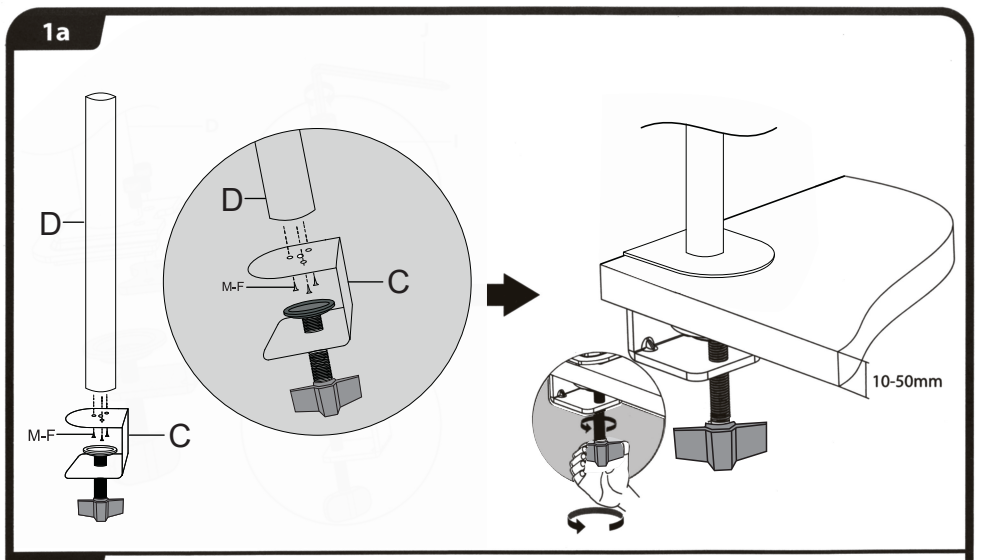
D
M-F
C
10-50mm

1b

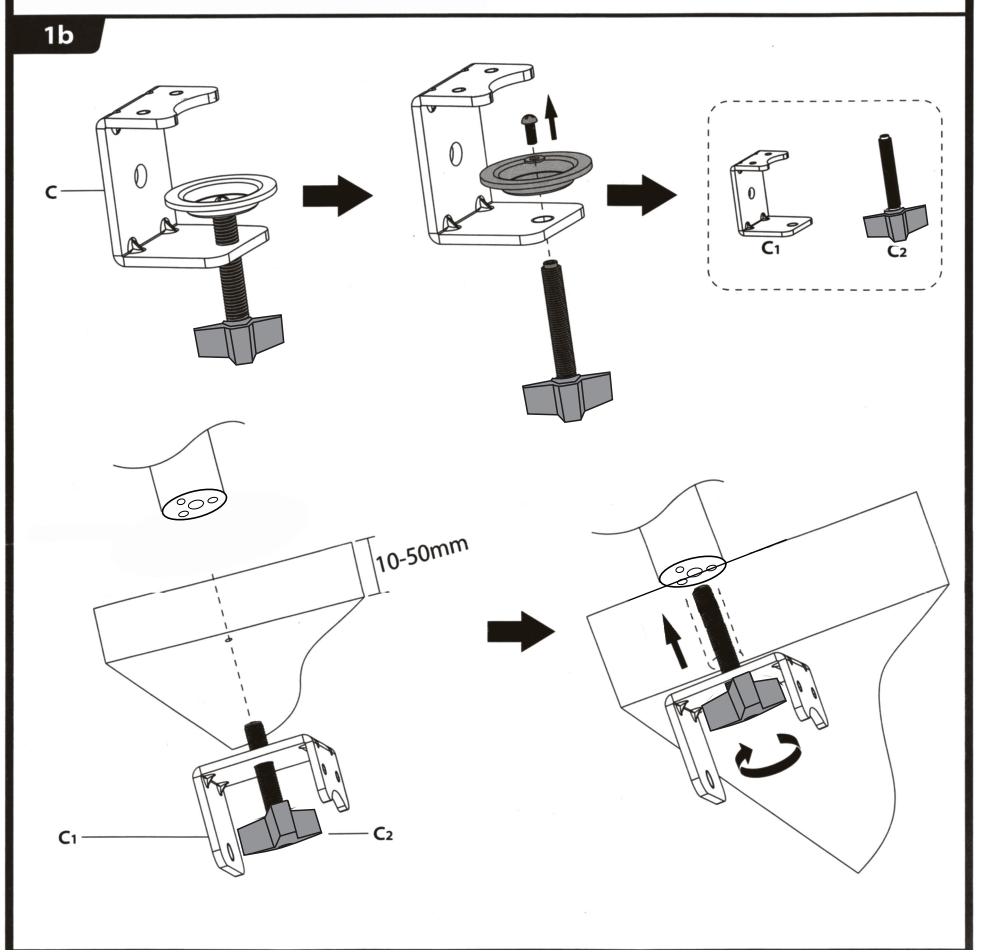
C
C1
C2
10-50mm

2

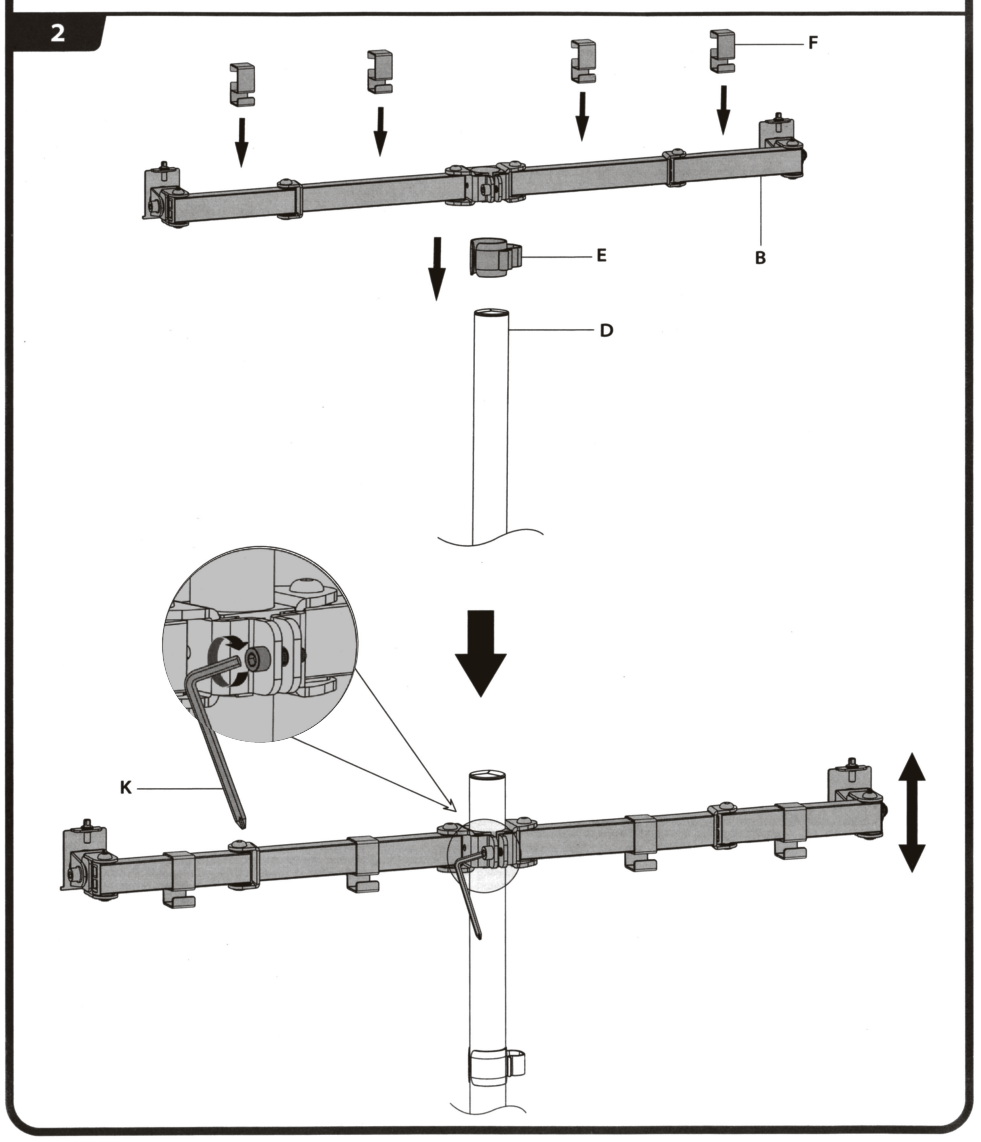
F
E
B
D
K

3a

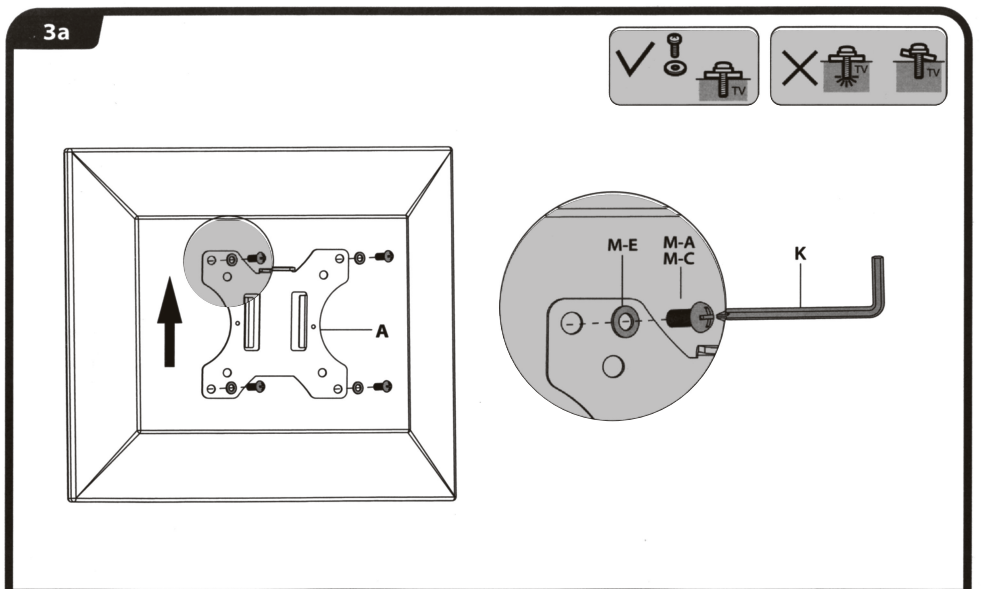
A
M-E
M-A
M-C
K

3b

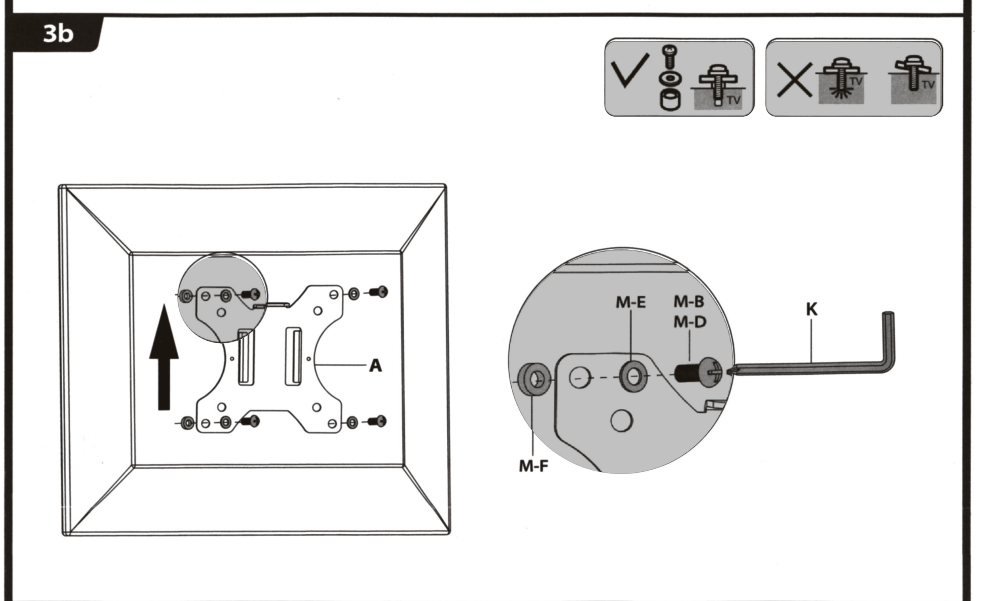
A
M-E
M-B
M-D
K
M-F

4

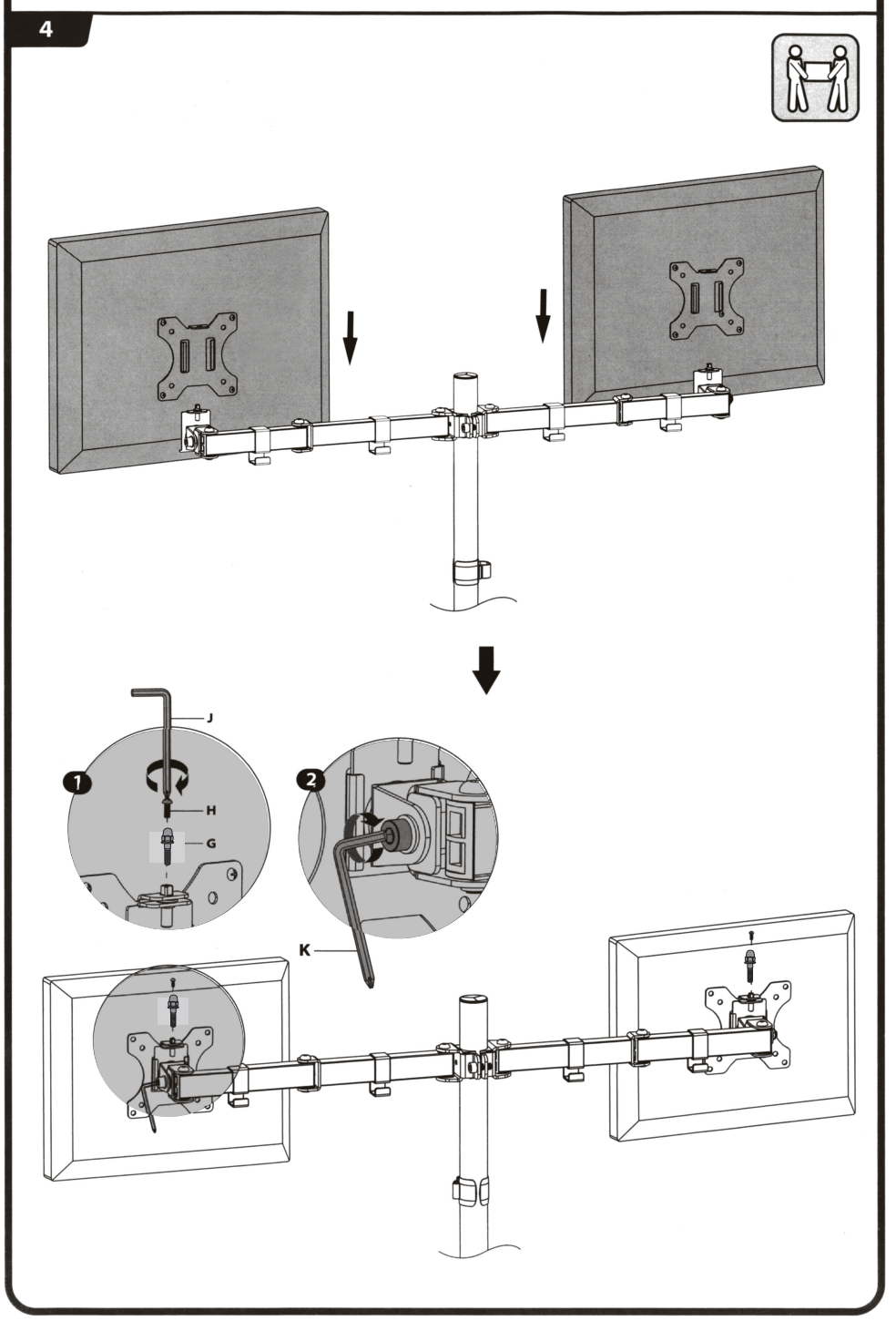
J
1
H
G
2
K