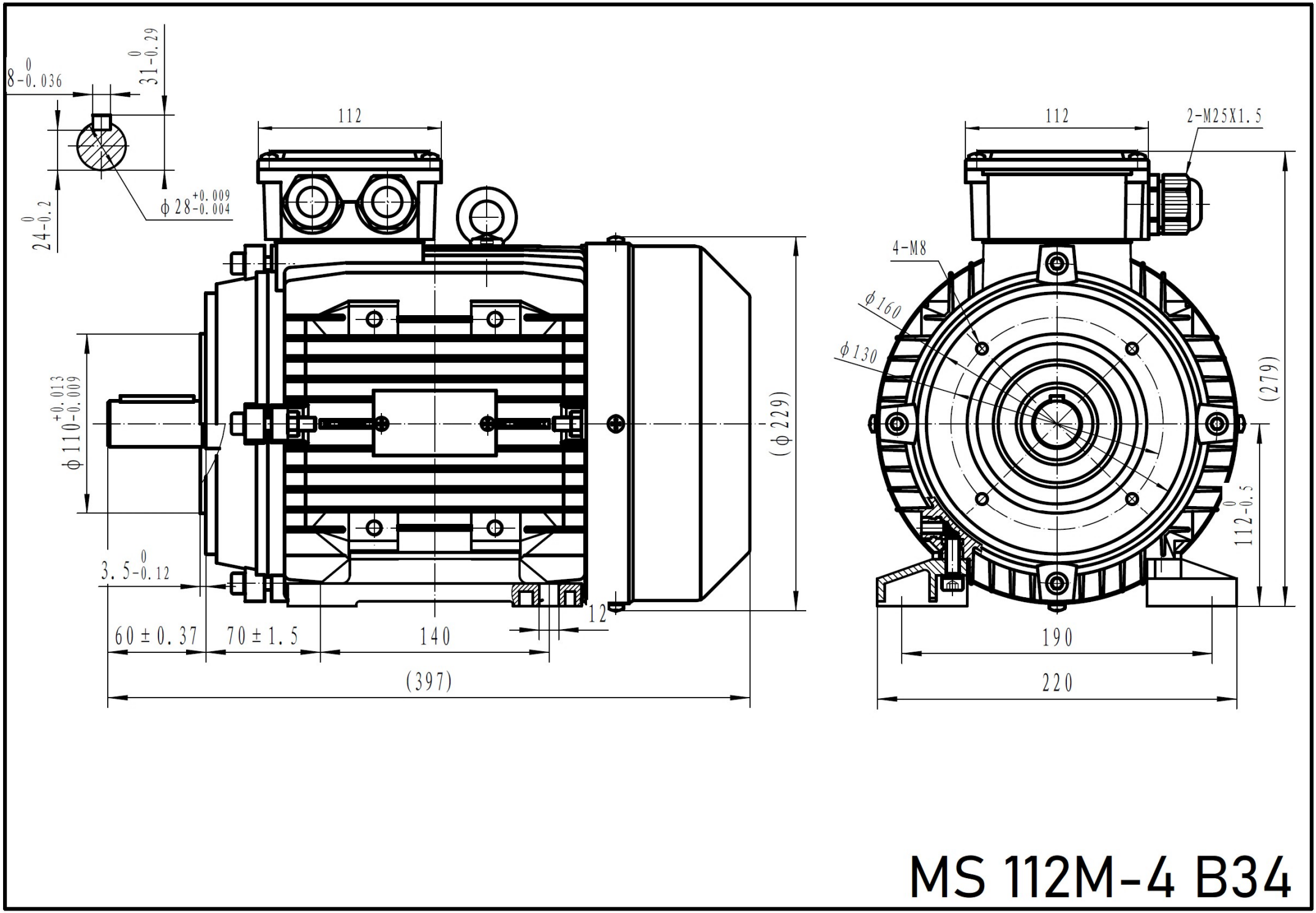
8 0 -0.036
31 0 -0.29
24 0 -0.2
ϕ28 +0.009 -0.004
112
ϕ110 +0.013 -0.009
3.5 0 -0.12
60±0.37
70±1.5
140
(397)
12
(ϕ229)
112
2-M25X1.5
4-M8
ϕ160
ϕ130
(279)
112 0 -0.5
190
220

MS 112M-4 B34