GRETSCH-UNITAS

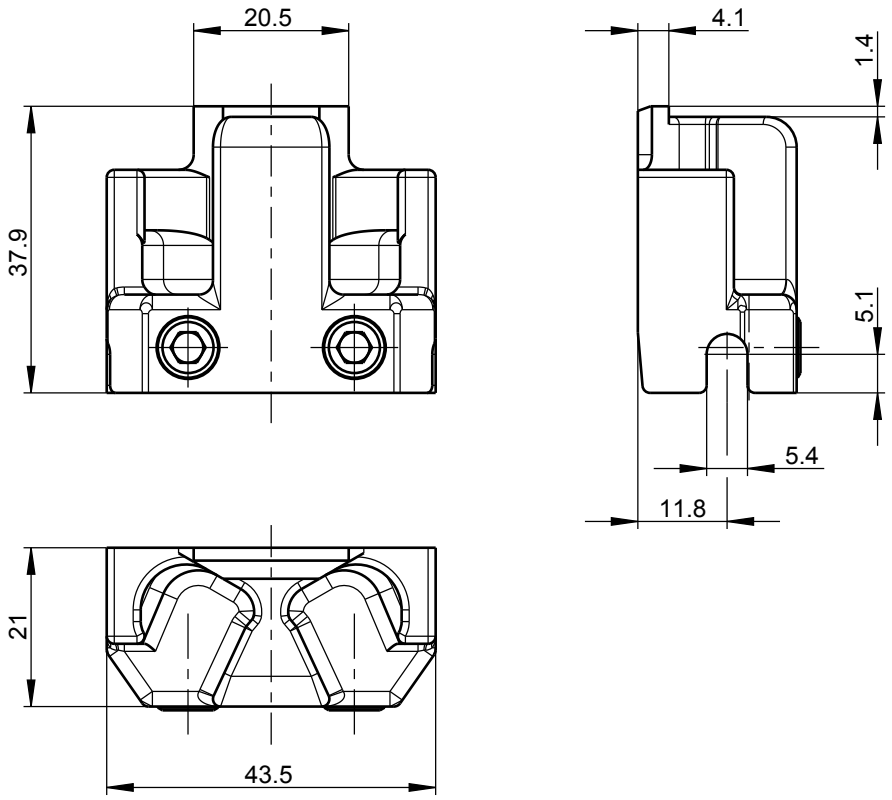

Proprietary rights apply in accordance with ISO 16016.

--
--
--
--
--

Description

Steuerteil 200

--

Contol part 200

	Release No. --	Level	Released		Scale	Modification	Size
		Ver.	--	--	1:1	1	4
	Mod. No. --	Draft	13.01.2017	Th		Drawing No. 6-33328-00-0	Sheet 1/1
	Replacement for --						

V4