VEVOR®

TOUGH TOOLS, HALF PRICE

Technical Support and E-Warranty Certificate www.vevor.com/support

PERGOLA BRACKETS

MODEL:SSE2 / SSF2

We continue to be committed to provide you tools with competitive price.
"Save Half", "Half Price" or any other similar expressions used by us only represents an estimate of savings you might benefit from buying certain tools with us compared to the major top brands and does not necessarily mean to cover all categories of tools offered by us. You are kindly reminded to verify carefully when you are placing an order with us if you are actually saving half in comparison with the top major brands.

VEVOR®
TOUGH TOOLS, HALF PRICE

PERGOLA BRACKETS

MODEL:SSE2 / SSF2

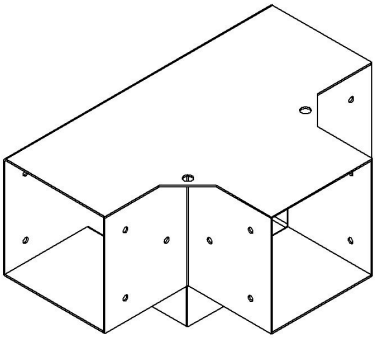

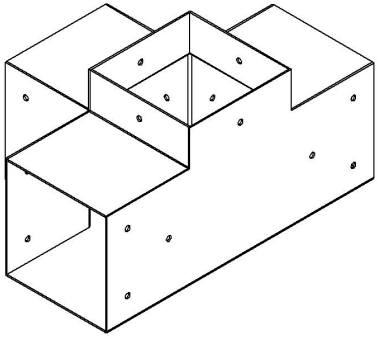

NEED HELP? CONTACT US!

Have product questions? Need technical support? Please feel free to contact us:

Technical Support and E-Warranty Certificate
www.vevor.com/support

This is the original instruction, please read all manual instructions carefully before operating. VEVOR reserves a clear interpretation of our user manual. The appearance of the product shall be subject to the product you received. Please forgive us that we won't inform you again if there are any technology or software updates on our product.

	Warning-To reduce the risk of injury, user must read instructions manual carefully.

Assembly precautions

1.Assemble only according to these instructions. Improper assembly can create hazards.

2. Wear heavy-duty work gloves during assembly.

3.Keep assembly area clean and well-lit.

4.Keep bystanders out of the area during assembly.

5.Do not assemble when tired or when under the influence of alcohol, drugs, or medication.

6.Product capabilities apply to properly and completely assembled product only.

7. For additional information regarding the parts listed in the following pages, please refer to the Assembly Diagram of this manual. Unwrap and separate all parts in a clean work area.

8. For safety reasons, This hardware is recommended to be installed by 2 people

WARNING:

This is not a toy. Not for use by children.

Do NOT use on inclines; seat may tip. Ensure the pergola brackets is on a level, firm surface.

Do NOT operate if any part is damaged or broken.

SAVE THESE INSTRUCTIONS

Model	**SSE2**	**SSF2**
Specification (inch)	4*4	6*6

Colour	Black	Black
QTY.	2	2

Part List			
Code	**Picture**	**Name**	**QTY.**
1	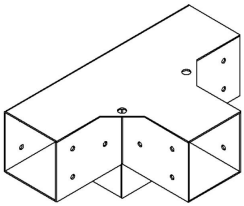	Pergola Bracket	2
2	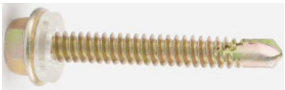	Screws	48

Product Introduction

SSE2	**SSF2**
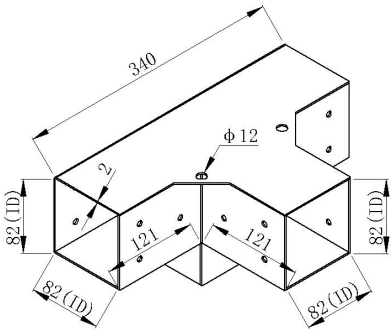 ID=Inside Diameter	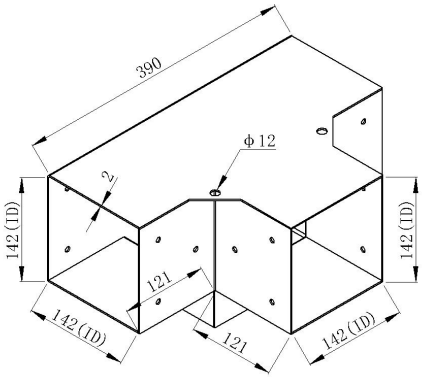 ID=Inside Diameter

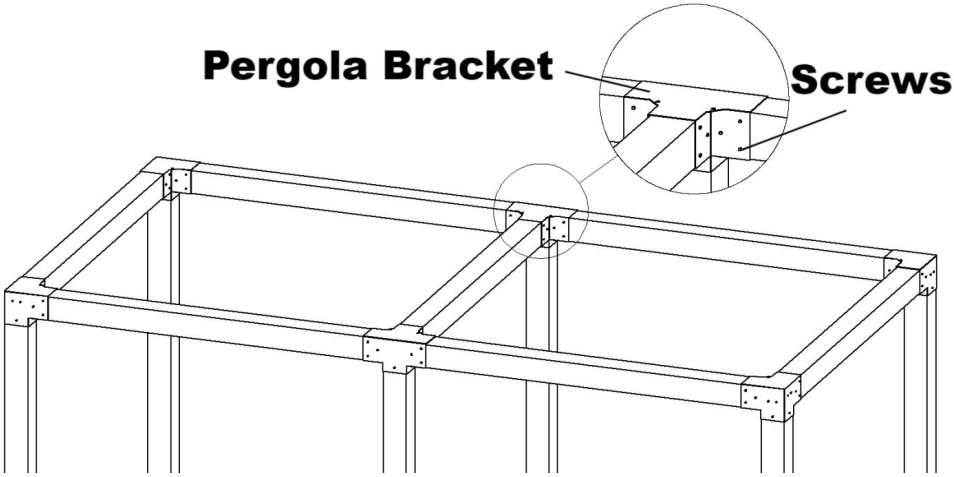

Address： Baoshanqu Shuangchenglu 803long 11hao 1602A-1609shi Shanghai

Imported to AUS: SIHAO PTY LTD. 1 ROKEVA STREETEASTWOOD NSW 2122 Australia

Imported to USA: Sanven Technology Ltd.Suite 250, 9166 Anaheim Place, Rancho Cucamonga, CA 91730

UK	REP

Pooledas Group Ltd
Unit 5 Albert Edward House, The Pavilions
Preston, United Kingdom

EC	REP

SHUNSHUN GmbH
Römeräcker 9 Z2021, 76351
Linkenheim-Hochstetten, Germany

Made In China

VEVOR®

TOUGH TOOLS, HALF PRICE

Technical Support and E-Warranty Certificate

www.vevor.com/support

VEVOR®

TOUGH TOOLS, HALF PRICE

Technique Assistance et certificat de garantie électronique

www.vevor.com/support

SUPPORTS POUR PERGOLA

MODÈLE: SSE2/SSF2

We continue to be committed to provide you tools with competitive price.
"Save Half", "Half Price" or any other similar expressions used by us only represents an estimate of savings you might benefit from buying certain tools with us compared to the major top brands and does not necessarily mean to cover all categories of tools offered by us. You are kindly reminded to verify carefully when you are placing an order with us if you are actually saving half in comparison with the top major brands.

VEVOR®
TOUGH TOOLS, HALF PRICE

PERGOLA BRACKETS

MODÈLE: SSE2/SSF2

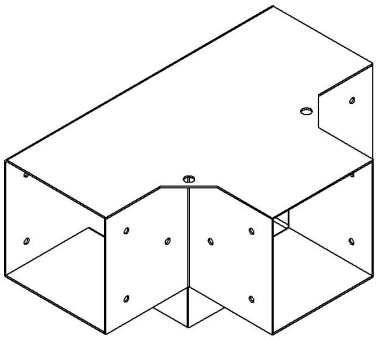

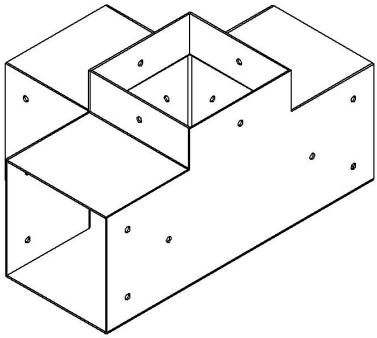

NEED HELP? CONTACT US!

Have product questions? Need technical support? Please feel free to contact us:

Technical Support and E-Warranty Certificate
www.vevor.com/support

This is the original instruction, please read all manual instructions carefully before operating. VEVOR reserves a clear interpretation of our user manual. The appearance of the product shall be subject to the product you received. Please forgive us that we won't inform you again if there are any technology or software updates on our product.

	Avertissement : Pour réduire le risque de blessure, l'utilisateur doit lire attentivement le manuel d'instructions.

Précautions de montage

1.Assemblez uniquement selon ces instructions. Un assemblage incorrect peut créer des dangers.
2. Portez des gants de travail résistants pendant l'assemblage.
3. Gardez la zone de montage propre et bien éclairée.
4. Gardez les spectateurs hors de la zone pendant l'assemblage.
5. Ne vous rassemblez pas lorsque vous êtes fatigué ou sous l'influence de l'alcool, de drogues ou de médicaments.
6. Les capacités du produit s'appliquent uniquement au produit correctement et complètement assemblé.
7. Pour plus d'informations concernant les pièces répertoriées dans les pages suivantes, veuillez vous référer au schéma d'assemblage de ce manuel. Déballez et séparez toutes les pièces dans une zone de travail propre.
8. Pour des raisons de sécurité, il est recommandé d'installer ce matériel par 2 personnes

AVERTISSEMENT:

Ce n'est pas un jouet. Ne pas utiliser par les enfants.
Ne PAS utiliser sur des pentes ; le siège peut basculer. Assurez-vous que les supports de la pergola se trouve sur une surface plane et ferme.
NE PAS faire fonctionner si une pièce est endommagée ou cassée.
CONSERVEZ CES INSTRUCTIONS

Modèle	ESS2	SSF2
Spécification (pouces)	4*4	6*6

Couleur	Noir	Noir
QTÉ.	2	2

Liste des pièces			
Code	**Image**	**Nom**	**QTÉ.**
1	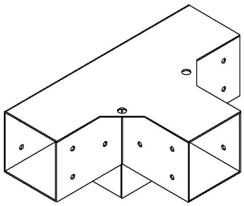	Support pour pergola	2
2	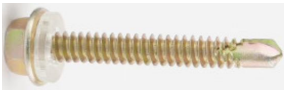	Des vis	48

Présentation du produit

ESS2	**SSF2**
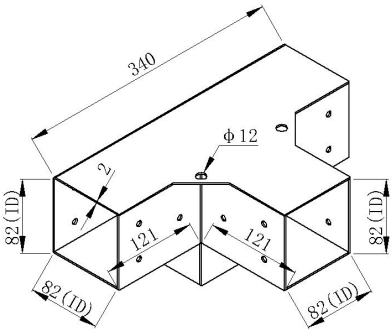 ID=Inside Diameter	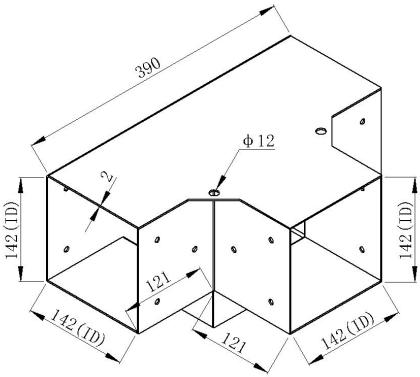 ID=Inside Diameter

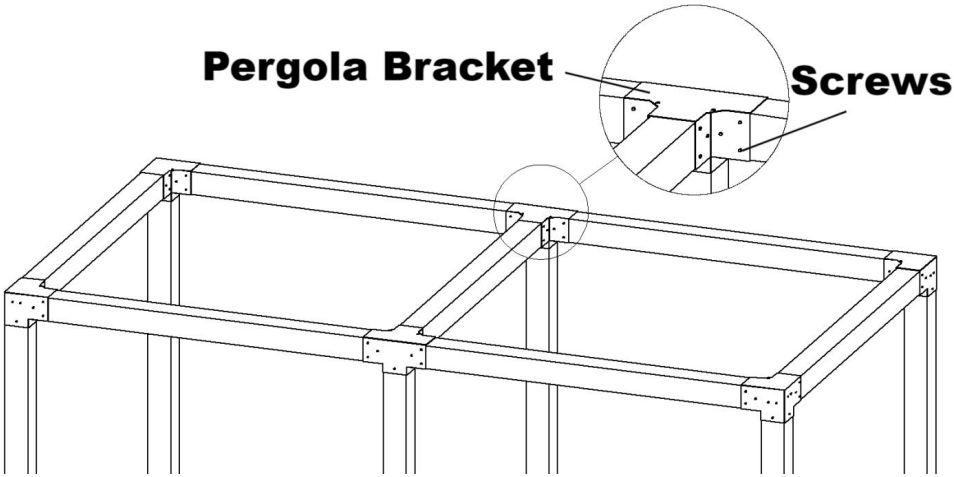

Adresse : Baoshanqu Shuangchenglu 803long 11hao 1602A-1609shi Shanghai
Importé en Australie : SIHAO PTY LTD . 1 ROKEVA STREETASTWOOD NSW 2122 Australie
Importé aux États-Unis : Sanven Technology Ltd. Bureau 250, 9166 Anaheim Place, Rancho Cucamonga, CA 91730

UK	REP

Pooledas Group Ltd
Unit 5 Albert Edward House, The Pavilions
Preston, United Kingdom

EC	REP

SHUNSHUN GmbH
Römeräcker 9 Z2021, 76351
Linkenheim-Hochstetten, Germany

Fabriqué en Chine

VEVOR®

TOUGH TOOLS, HALF PRICE

Technique Assistance et certificat de garantie électronique

www.vevor.com/support

VEVOR®

TOUGH TOOLS, HALF PRICE

Technisch Support- und E-Garantie-Zertifikat www.vevor.com/support

PERGOLA-HALTERUNGEN

MODELL: SSE2 / SSF2

We continue to be committed to provide you tools with competitive price.
"Save Half", "Half Price" or any other similar expressions used by us only represents an estimate of savings you might benefit from buying certain tools with us compared to the major top brands and does not necessarily mean to cover all categories of tools offered by us. You are kindly reminded to verify carefully when you are placing an order with us if you are actually saving half in comparison with the top major brands.

VEVOR®
TOUGH TOOLS, HALF PRICE

PERGOLA BRACKETS

MODELL: SSE2 / SSF2

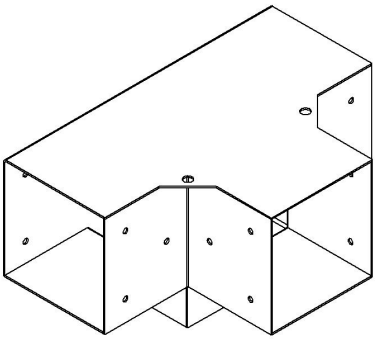

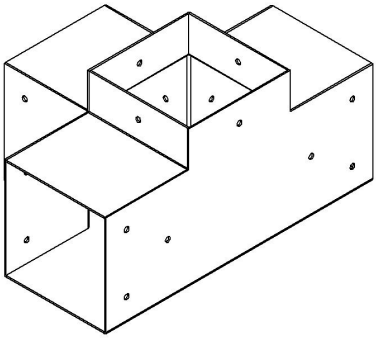

NEED HELP? CONTACT US!

Have product questions? Need technical support? Please feel free to contact us:

Technical Support and E-Warranty Certificate
www.vevor.com/support

This is the original instruction, please read all manual instructions carefully before operating. VEVOR reserves a clear interpretation of our user manual. The appearance of the product shall be subject to the product you received. Please forgive us that we won't inform you again if there are any technology or software updates on our product.

	Warnung: Um das Verletzungsrisiko zu verringern, muss der Benutzer die Bedienungsanleitung sorgfältig lesen.

Vorsichtsmaßnahmen bei der Montage

1.Montage nur gemäß dieser Anleitung. Durch unsachgemäße Montage können Gefahren entstehen.
2. Tragen Sie bei der Montage robuste Arbeitshandschuhe.
3. Halten Sie den Montagebereich sauber und gut beleuchtet.
4. Halten Sie während der Montage unbeteiligte Personen aus dem Bereich fern.
5. Bauen Sie das Gerät nicht auf, wenn Sie müde sind oder unter dem Einfluss von Alkohol, Drogen oder Medikamenten stehen.
6. Die Produkteigenschaften gelten nur für ordnungsgemäß und vollständig montierte Produkte.
7. Weitere Informationen zu den auf den folgenden Seiten aufgeführten Teilen finden Sie im Montagediagramm dieser Anleitung. Packen Sie alle Teile aus und trennen Sie sie an einem sauberen Arbeitsplatz.
8. Aus Sicherheitsgründen wird empfohlen, diese Hardware von 2 Personen zu installieren

WARNUNG:

Dies ist kein Spielzeug. Nicht für Kinder geeignet.
NICHT an Steigungen verwenden; Der Sitz kann umkippen. Stellen Sie sicher, dass die Pergola-Halterungen vorhanden sind steht auf einem ebenen, festen Untergrund.
Betreiben Sie das Gerät NICHT, wenn ein Teil beschädigt oder gebrochen ist.

ANLEITUNG AUFBEWAHREN

Modell	SSE2	SSF2

Spezifikation (Zoll)	4*4	6*6
Farbe	Schwarz	Schwarz
MENGE.	2	2

Stückliste			
Code	**Bild**	**Name**	**MENGE.**
1	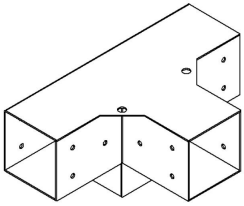	Pergola-Halterung	2
2		Schrauben	48

Produkteinführung

SSE2	SSF2

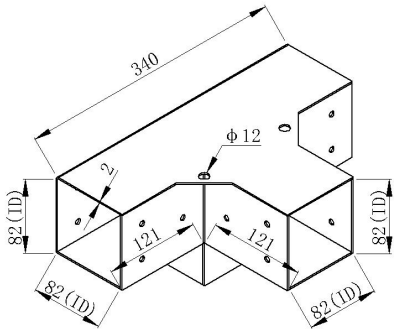

ID=Inside Diameter

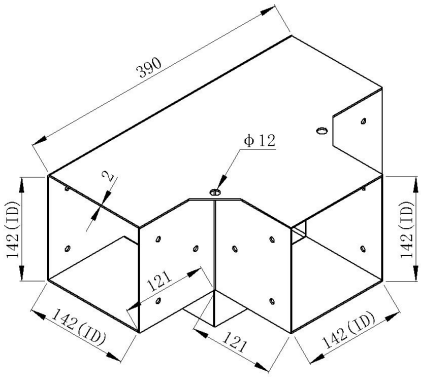

ID=Inside Diameter

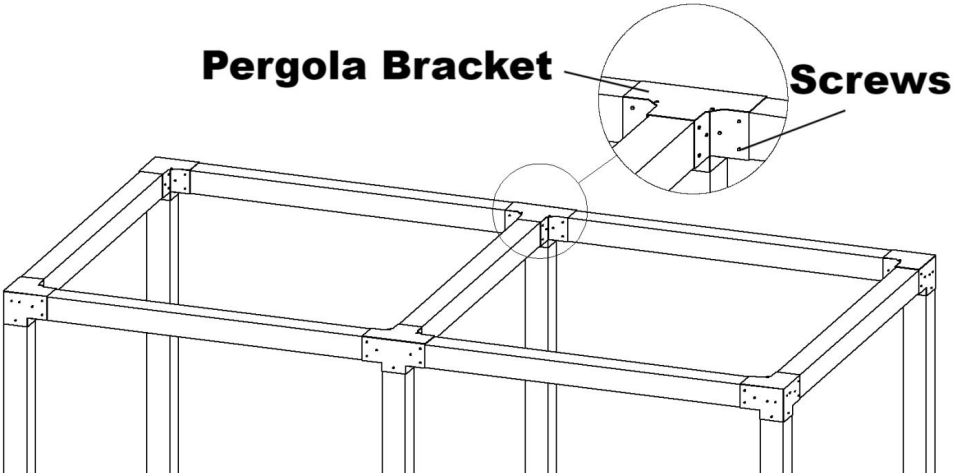

Adresse: Baoshanqu Shuangchenglu 803long 11hao 1602A-1609shi Shanghai

Importiert nach AUS: SIHAO PTY LTD . 1 ROKEVA STREETEASTWOOD NSW 2122 Australien

Importiert in die USA: Sanven Technology Ltd. Suite 250, 9166 Anaheim

Place, Rancho Cucamonga, CA 91730

UK	REP

Pooledas Group Ltd
Unit 5 Albert Edward House, The Pavilions
Preston, United Kingdom

EC	REP

SHUNSHUN GmbH
Römeräcker 9 Z2021, 76351
Linkenheim-Hochstetten, Germany

In China hergestellt

VEVOR®

TOUGH TOOLS, HALF PRICE

Technisch Support- und E-Garantiezertifikat

www.vevor.com/support

VEVOR®

TOUGH TOOLS, HALF PRICE

Tecnico Supporto e certificato di garanzia elettronica www.vevor.com/support

STAFFE PERGOLA

MODELLO:SSE2/SSF2

We continue to be committed to provide you tools with competitive price.
"Save Half", "Half Price" or any other similar expressions used by us only represents an estimate of savings you might benefit from buying certain tools with us compared to the major top brands and does not necessarily mean to cover all categories of tools offered by us. You are kindly reminded to verify carefully when you are placing an order with us if you are actually saving half in comparison with the top major brands.

VEVOR®
TOUGH TOOLS, HALF PRICE

PERGOLA BRACKETS

MODELLO:SSE2/SSF2

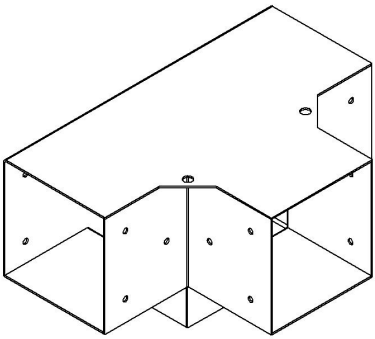

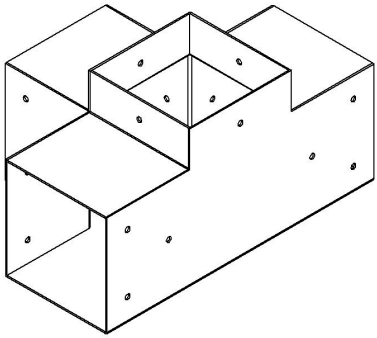

NEED HELP? CONTACT US!

Have product questions? Need technical support? Please feel free to contact us:

Technical Support and E-Warranty Certificate
www.vevor.com/support

This is the original instruction, please read all manual instructions carefully before operating. VEVOR reserves a clear interpretation of our user manual. The appearance of the product shall be subject to the product you received. Please forgive us that we won't inform you again if there are any technology or software updates on our product.

	Avvertenza: per ridurre il rischio di lesioni, l'utente deve leggere attentamente il manuale di istruzioni.

Precauzioni per il montaggio

1.Montare solo seguendo queste istruzioni. Un montaggio improprio può creare pericoli.

2. Indossare guanti da lavoro resistenti durante il montaggio.

3.Mantenere l'area di assemblaggio pulita e ben illuminata.

4.Tenere gli astanti lontani dall'area durante il montaggio.

5. Non montare in caso di stanchezza o sotto l'effetto di alcol, droghe o farmaci.

6. Le funzionalità del prodotto si applicano solo al prodotto correttamente e completamente assemblato.

7. Per ulteriori informazioni riguardanti le parti elencate nelle pagine seguenti, fare riferimento allo Schema di Montaggio di questo manuale. Scartare e separare tutte le parti in un'area di lavoro pulita.

8. Per motivi di sicurezza, si consiglia di installare questo hardware da 2 persone

AVVERTIMENTO:

Questo non è un giocattolo. Non adatto all'uso da parte dei bambini.

NON utilizzare in pendenza; il sedile potrebbe ribaltarsi. Assicurare le staffe della pergola sia su una superficie piana e solida.

NON utilizzare se qualsiasi parte è danneggiata o rotta.

CONSERVA QUESTE ISTRUZIONI

Modello	**SSE2**	**SSF2**
Specifiche (pollici)	4*4	6*6

Colore	Nero	Nero
QUANTITÀ.	2	2

Elenco delle parti			
Codice	**Immagine**	**Nome**	**QUANTITÀ.**
1	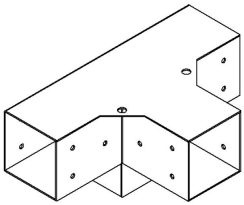	Staffa Pergola	2
2	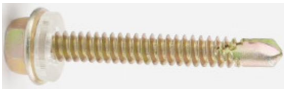	Viti	48

introduzione al prodotto

SSE2	**SSF2**
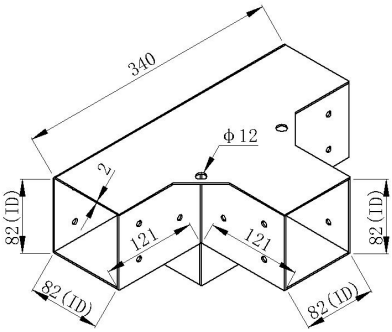 ID=Inside Diameter	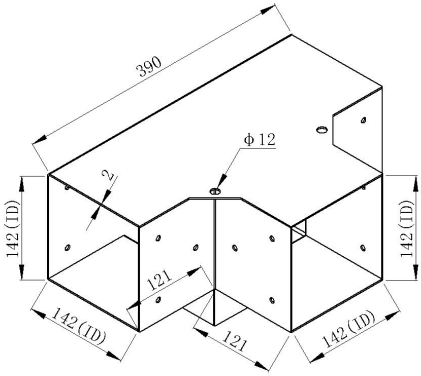 ID=Inside Diameter

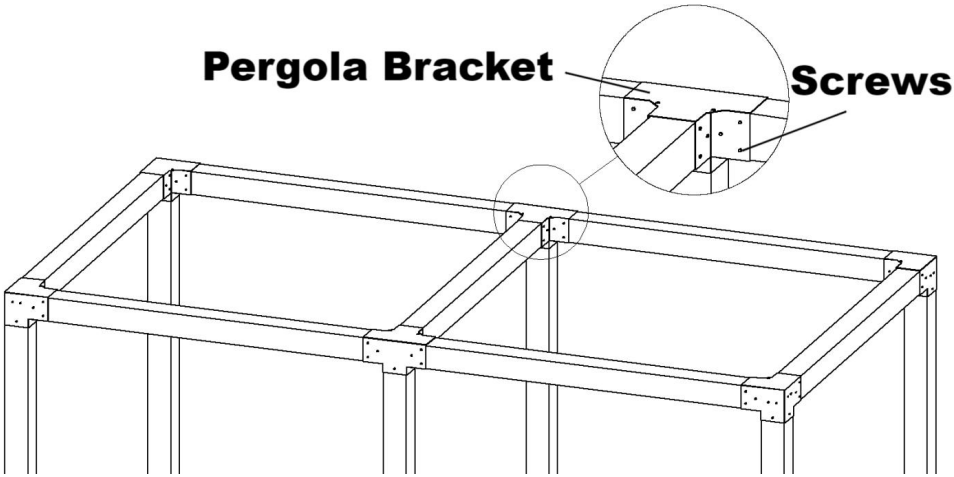

Indirizzo: Baoshanqu Shuangchenglu 803long 11hao 1602A-1609shi Shanghai
Importato in AUS: SIHAO PTY LTD . 1 ROKEVA STREETEASTWOOD NSW 2122 Australia
Importato negli Stati Uniti: Sanven Technology Ltd. Suite 250, 9166 Anaheim Place, Rancho Cucamonga, CA 91730

UK	REP

Pooledas Group Ltd
Unit 5 Albert Edward House, The Pavilions
Preston, United Kingdom

EC	REP

SHUNSHUN GmbH
Römeräcker 9 Z2021, 76351
Linkenheim-Hochstetten, Germany

Made in China

VEVOR®

TOUGH TOOLS, HALF PRICE

Tecnico Supporto e certificato di garanzia elettronica

www.vevor.com/support

VEVOR®

TOUGH TOOLS, HALF PRICE

Técnico Soporte y certificado de garantía electrónica www.vevor.com/support

SOPORTES DE PÉRGOLA

MODELO:SSE2/SSF2

We continue to be committed to provide you tools with competitive price.
"Save Half", "Half Price" or any other similar expressions used by us only represents an estimate of savings you might benefit from buying certain tools with us compared to the major top brands and does not necessarily mean to cover all categories of tools offered by us. You are kindly reminded to verify carefully when you are placing an order with us if you are actually saving half in comparison with the top major brands.

VEVOR®
TOUGH TOOLS, HALF PRICE

PERGOLA BRACKETS

MODELO:SSE2/SSF2

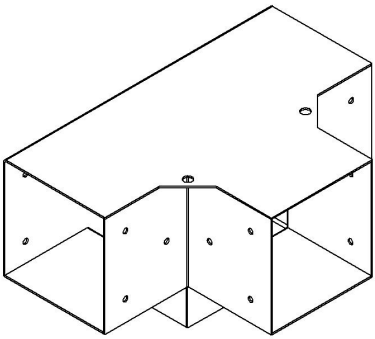

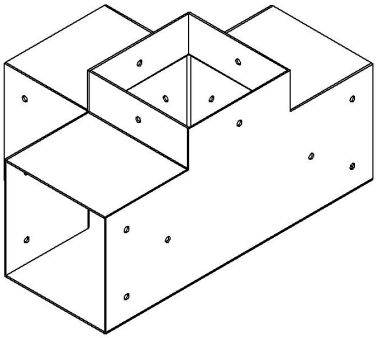

NEED HELP? CONTACT US!

Have product questions? Need technical support? Please feel free to contact us:

Technical Support and E-Warranty Certificate
www.vevor.com/support

This is the original instruction, please read all manual instructions carefully before operating. VEVOR reserves a clear interpretation of our user manual. The appearance of the product shall be subject to the product you received. Please forgive us that we won't inform you again if there are any technology or software updates on our product.

	Advertencia: para reducir el riesgo de lesiones, el usuario debe leer atentamente el manual de instrucciones.

Precauciones de montaje

1.Ensamble únicamente de acuerdo con estas instrucciones. Un montaje inadecuado puede crear peligros.
2. Utilice guantes de trabajo resistentes durante el montaje.
3. Mantenga el área de reunión limpia y bien iluminada.
4.Mantenga a los transeúntes fuera del área durante el montaje.
5. No se reúna cuando esté cansado o bajo la influencia de alcohol, drogas o medicamentos.
6. Las capacidades del producto se aplican únicamente al producto ensamblado de manera adecuada y completa.
7. Para obtener información adicional sobre las piezas enumeradas en las siguientes páginas, consulte el diagrama de montaje de este manual. Desenvuelva y separe todas las piezas en un área de trabajo limpia.
8. Por razones de seguridad, se recomienda que este hardware sea instalado por 2 personas.

ADVERTENCIA:

Esto no es un juguete. No apto para uso de niños.
NO lo use en pendientes; el asiento puede volcarse. Asegúrese de que los soportes de la pérgola está sobre una superficie nivelada y firme.
NO lo opere si alguna pieza está dañada o rota.

GUARDA ESTAS INSTRUCCIONES

Modelo	**SSE2**	**SSF2**
Especificación (pulgadas)	4*4	6*6

Color	Negro	Negro
CANT.	2	2

Lista de			
Código	**Imagen**	**Nombre**	**CANT.**
1	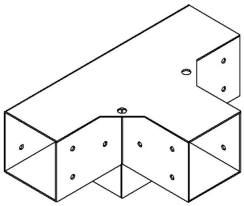	Soporte de pérgola	2
2	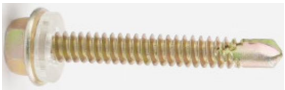	Tornillos	48

Introducción del producto

SSE2	**SSF2**
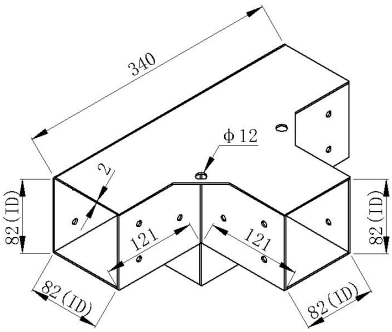 ID=Inside Diameter	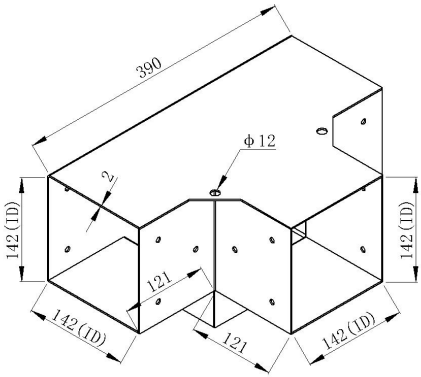 ID=Inside Diameter

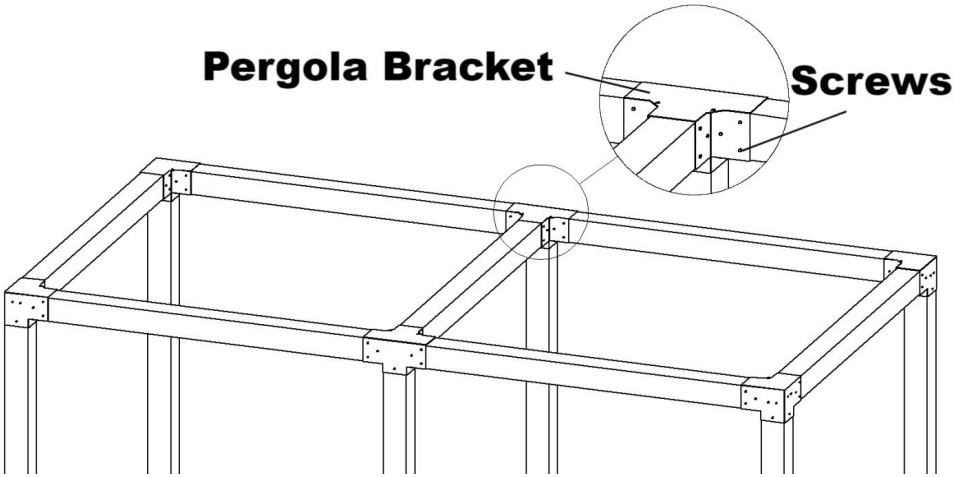

Dirección: Baoshanqu Shuangchenglu 803long 11hao 1602A-1609shi Shanghai
Importado a AUS: SIHAO PTY LTD . 1 ROKEVA STREETASTWOOD NSW 2122 Australia
Importado a EE. UU.: Sanven Technology Ltd. Suite 250, 9166 Anaheim Place, Rancho Cucamonga, CA 91730

UK	REP

Pooledas Group Ltd
Unit 5 Albert Edward House, The Pavilions
Preston, United Kingdom

EC	REP

SHUNSHUN GmbH
Römeräcker 9 Z2021, 76351
Linkenheim-Hochstetten, Germany

Hecho en china

VEVOR®

TOUGH TOOLS, HALF PRICE

Técnico Certificado de soporte y garantía electrónica

www.vevor.com/support

VEVOR®

TOUGH TOOLS, HALF PRICE

Techniczny Certyfikat wsparcia i e-gwarancji www.vevor.com/support

WSPORNIKI DO PERGOLI

MODEL:SSE2/SSF2

We continue to be committed to provide you tools with competitive price.
"Save Half", "Half Price" or any other similar expressions used by us only represents an estimate of savings you might benefit from buying certain tools with us compared to the major top brands and does not necessarily mean to cover all categories of tools offered by us. You are kindly reminded to verify carefully when you are placing an order with us if you are actually saving half in comparison with the top major brands.

VEVOR®

TOUGH TOOLS, HALF PRICE

PERGOLA BRACKETS

MODEL:SSE2/SSF2

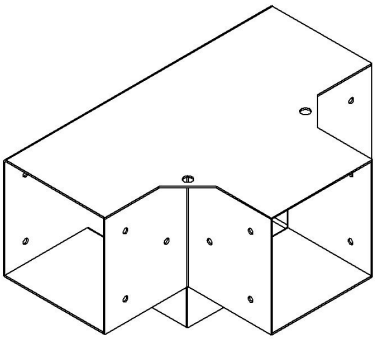

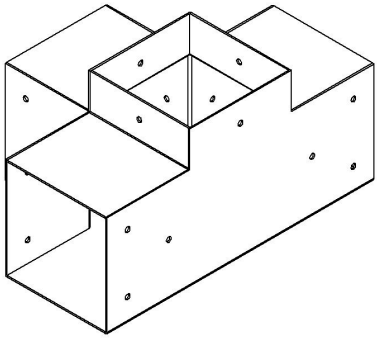

NEED HELP? CONTACT US!

Have product questions? Need technical support? Please feel free to contact us:

Technical Support and E-Warranty Certificate
www.vevor.com/support

This is the original instruction, please read all manual instructions carefully before operating. VEVOR reserves a clear interpretation of our user manual. The appearance of the product shall be subject to the product you received. Please forgive us that we won't inform you again if there are any technology or software updates on our product.

	Ostrzeżenie — aby zmniejszyć ryzyko obrażeń, użytkownik musi uważnie przeczytać instrukcję obsługi.

Środki ostrożności podczas montażu

1.Montaż wyłącznie według niniejszej instrukcji. Nieprawidłowy montaż może stworzyć zagrożenie.
2. Podczas montażu należy nosić grube rękawice robocze.
3. Utrzymuj miejsce montażu w czystości i dobrze oświetlone.
4. Podczas montażu nie dopuszczaj osób postronnych do obszaru.
5. Nie montuj się, gdy jesteś zmęczony lub pod wpływem alkoholu, narkotyków lub leków.
6. Możliwości produktu dotyczą wyłącznie prawidłowo i całkowicie zmontowanego produktu.
7. Dodatkowe informacje dotyczące części wymienionych na kolejnych stronach można znaleźć na schemacie montażu w niniejszej instrukcji. Rozpakuj i oddziel wszystkie części w czystym miejscu pracy.
8. Ze względów bezpieczeństwa zaleca się instalację tego sprzętu w 2 osoby

OSTRZEŻENIE:

To nie jest zabawka. Nie do użytku przez dzieci.
NIE używać na pochyłościach; siedzenie może się przechylić. Zapewnij wsporniki pergoli znajduje się na równej, twardej powierzchni.
NIE używaj, jeśli jakakolwiek część jest uszkodzona lub uszkodzona.
ZACHOWAJ TE INSTRUKCJE

Model	**SSE2**	**SSF2**
Specyfikacja (cale)	4*4	6*6

Kolor	Czarny	Czarny
ILOŚĆ.	2	2

Lista części			
Kod	**Zdjęcie**	**Nazwa**	**ILOŚĆ.**
1	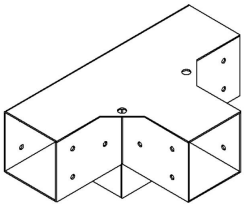	Wspornik do pergoli	2
2	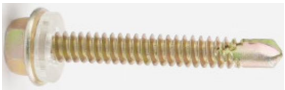	Śruby	48

Wprowadzenie produktów

SSE2	**SSF2**
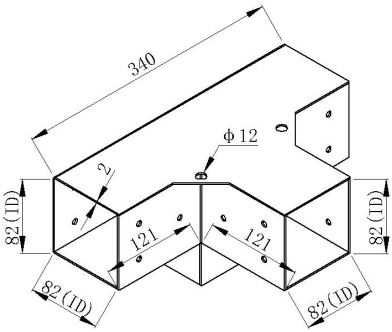 ID=Inside Diameter	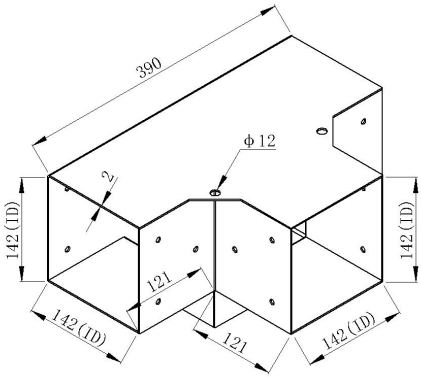 ID=Inside Diameter

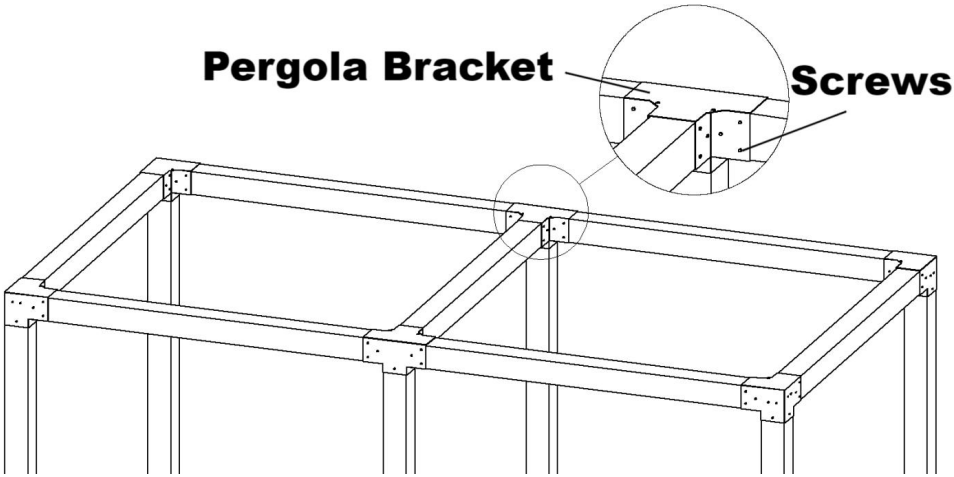

Adres: Baoshanqu Shuangchenglu 803long 11hao 1602A-1609shi Szanghaj
Import do AUS: SIHAO PTY LTD . 1 ROKEVA STREETEASTWOOD NSW 2122 Australia
Import do USA: Sanven Technology Ltd. Apartament 250, 9166 Anaheim Place, Rancho Cucamonga, Kalifornia 91730

UK	REP

Pooledas Group Ltd
Unit 5 Albert Edward House, The Pavilions
Preston, United Kingdom

EC	REP

SHUNSHUN GmbH
Römeräcker 9 Z2021, 76351
Linkenheim-Hochstetten, Germany

Wyprodukowano w Chinach

VEVOR®

TOUGH TOOLS, HALF PRICE

Techniczny Certyfikat wsparcia i e-gwarancji

www.vevor.com/support

VEVOR®

TOUGH TOOLS, HALF PRICE

Technisch Ondersteuning en e-garantiecertificaat www.vevor.com/support

PERGOLA-BEUGELS

MODEL:SSE2/SSF2

We continue to be committed to provide you tools with competitive price.
"Save Half", "Half Price" or any other similar expressions used by us only represents an estimate of savings you might benefit from buying certain tools with us compared to the major top brands and does not necessarily mean to cover all categories of tools offered by us. You are kindly reminded to verify carefully when you are placing an order with us if you are actually saving half in comparison with the top major brands.

VEVOR®

TOUGH TOOLS, HALF PRICE

PERGOLA BRACKETS

MODEL:SSE2/SSF2

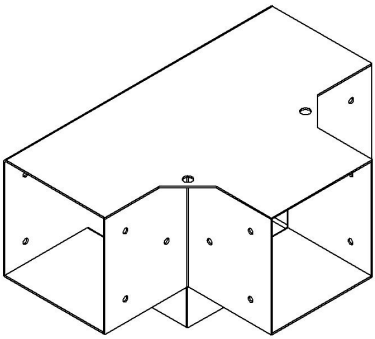

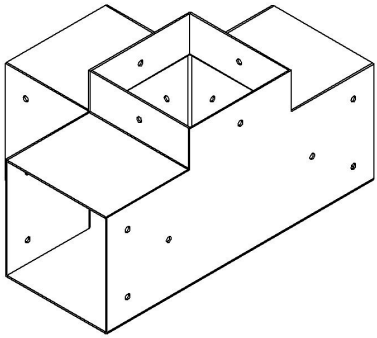

NEED HELP? CONTACT US!

Have product questions? Need technical support? Please feel free to contact us:

Technical Support and E-Warranty Certificate
www.vevor.com/support

This is the original instruction, please read all manual instructions carefully before operating. VEVOR reserves a clear interpretation of our user manual. The appearance of the product shall be subject to the product you received. Please forgive us that we won't inform you again if there are any technology or software updates on our product.

	Waarschuwing-Om het risico op letsel te verminderen, moet de gebruiker de handleiding zorgvuldig lezen.

Voorzorgsmaatregelen voor montage

1.Monteer uitsluitend volgens deze instructies. Onjuiste montage kan gevaren veroorzaken.

2. Draag tijdens de montage stevige werkhandschoenen.

3. Houd de verzamelplaats schoon en goed verlicht.

4.Houd omstanders tijdens de montage uit de buurt.

5. Niet monteren als u moe bent of onder invloed bent van alcohol, drugs of medicijnen.

6.Productmogelijkheden zijn alleen van toepassing op correct en volledig gemonteerde producten.

7. Voor aanvullende informatie over de onderdelen die op de volgende pagina's worden vermeld, verwijzen wij u naar het montageschema van deze handleiding. Pak alle onderdelen uit en scheid ze van elkaar op een schone werkplek.

8. Om veiligheidsredenen wordt aanbevolen dat deze hardware door 2 personen wordt geïnstalleerd

WAARSCHUWING:

Dit is geen speelgoed. Niet voor gebruik door kinderen.

NIET gebruiken op hellingen; stoel kan kantelen. Zorg voor de pergolabeugels op een vlakke, stevige ondergrond staat.

Gebruik het apparaat NIET als een onderdeel beschadigd of kapot is.

BEWAAR DEZE INSTRUCTIES

Model	**SSE2**	**SSF2**
Specificatie (inch)	4*4	6*6

Kleur	Zwart	Zwart
AANTAL.	2	2

Onderdelen lijst			
Code	**Afbeelding**	**Naam**	**AANTAL.**
1	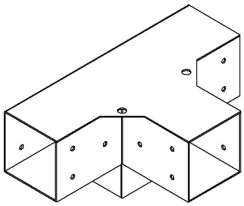	Pergola-beugel	2
2	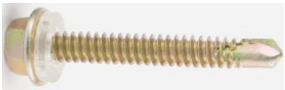	Schroeven	48

product Introductie

SSE2	**SSF2**
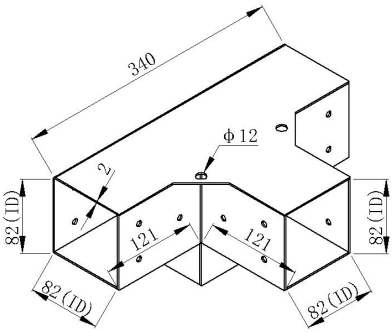 ID=Inside Diameter	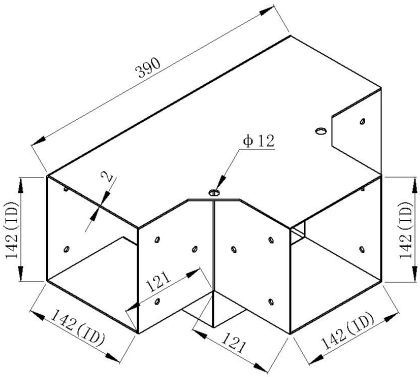 ID=Inside Diameter

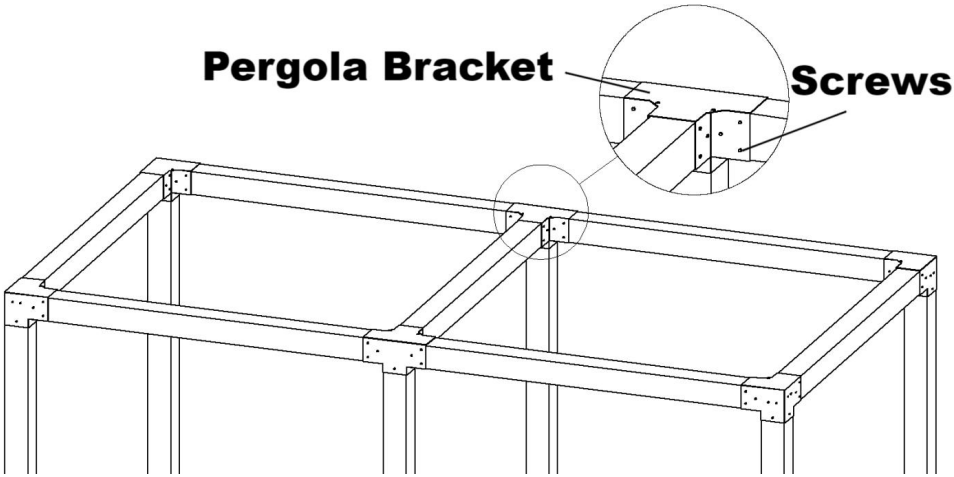

Adres: Baoshanqu Shuangchenglu 803long 11hao 1602A-1609shi Shanghai
Geïmporteerd naar AUS: SIHAO PTY LTD . 1 ROKEVA STREETEASTWOOD NSW 2122 Australië
Geïmporteerd naar de VS: Sanven Technology Ltd. Suite 250, 9166 Anaheim Place, Rancho Cucamonga, CA 91730

UK	REP

Pooledas Group Ltd
Unit 5 Albert Edward House, The Pavilions
Preston, United Kingdom

EC	REP

SHUNSHUN GmbH
Römeräcker 9 Z2021, 76351
Linkenheim-Hochstetten, Germany

Gemaakt in China

VEVOR®

TOUGH TOOLS, HALF PRICE

Technisch Ondersteuning en e-garantiecertificaat

www.vevor.com/support

VEVOR®

TOUGH TOOLS, HALF PRICE

Teknisk Support och e-garanticertifikat www.vevor.com/support

PERGOLA FÄSTEN

MODELL: SSE2 / SSF2

We continue to be committed to provide you tools with competitive price.
"Save Half", "Half Price" or any other similar expressions used by us only represents an estimate of savings you might benefit from buying certain tools with us compared to the major top brands and does not necessarily mean to cover all categories of tools offered by us. You are kindly reminded to verify carefully when you are placing an order with us if you are actually saving half in comparison with the top major brands.

VEVOR®
TOUGH TOOLS, HALF PRICE

PERGOLA BRACKETS

MODELL: SSE2 / SSF2

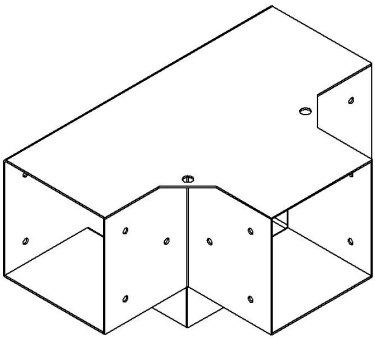

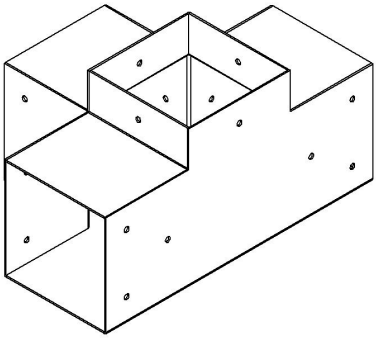

NEED HELP? CONTACT US!

Have product questions? Need technical support? Please feel free to contact us:

Technical Support and E-Warranty Certificate
www.vevor.com/support

This is the original instruction, please read all manual instructions carefully before operating. VEVOR reserves a clear interpretation of our user manual. The appearance of the product shall be subject to the product you received. Please forgive us that we won't inform you again if there are any technology or software updates on our product.

	Varning - För att minska risken för skada måste användaren läsa instruktionerna noggrant.

Försiktighetsåtgärder vid montering

1. Montera endast enligt dessa instruktioner. Felaktig montering kan skapa faror.
2. Använd kraftiga arbetshandskar vid montering.
3. Håll monteringsområdet rent och väl upplyst.
4. Håll åskådare borta från området under monteringen.
5. Sätt dig inte ihop när du är trött eller påverkad av alkohol, droger eller medicin.
6. Produktegenskaper gäller endast för korrekt och färdigmonterad produkt.
7. För ytterligare information om delarna som listas på följande sidor, se monteringsdiagrammet i denna manual. Packa upp och separera alla delar på ett rent arbetsområde.
8. Av säkerhetsskäl rekommenderas denna hårdvara att installeras av 2 personer

VARNING:

Det här är ingen leksak. Ej för användning av barn.

Använd INTE i sluttningar; sätet kan tippa. Se till pergolafästena står på en jämn, fast yta.

Använd INTE om någon del är skadad eller trasig.

SPARA DESSA INSTRUKTIONER

Modell	SSE2	SSF2
S specifikation (tum)	4*4	6*6

Färg	Svart	Svart
ANTAL.	2	2

Dellista			
Koda	**Bild**	**namn**	**ANTAL.**
1	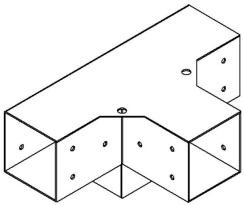	Pergola fäste	2
2	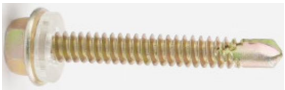	Skruvar	48

produkt introduktion

SSE2	**SSF2**
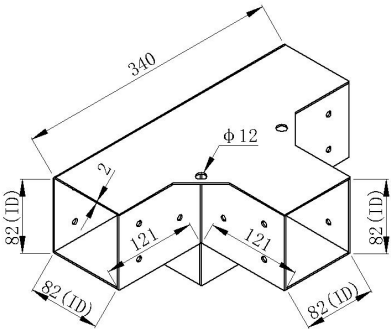 ID=Inside Diameter	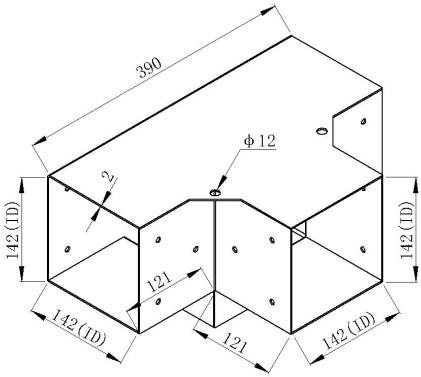 ID=Inside Diameter

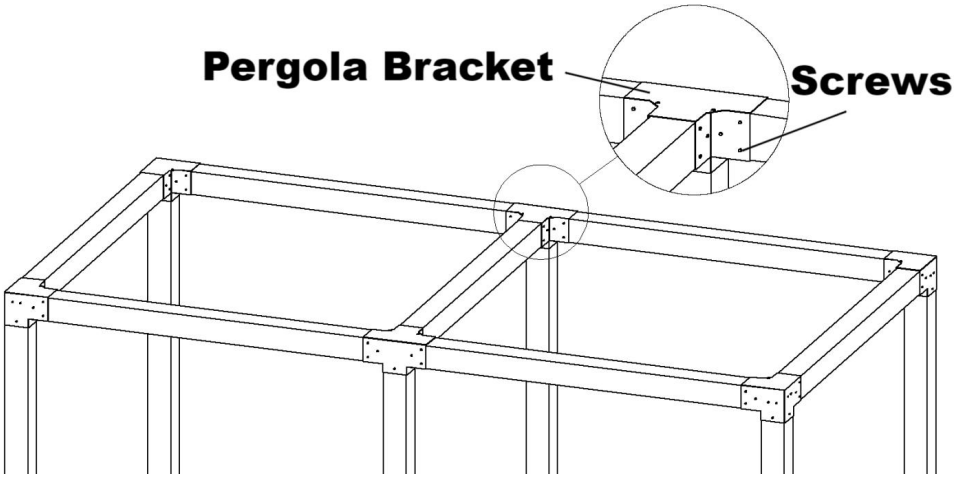

Adress: Baoshanqu Shuangchenglu 803long 11hao 1602A-1609shi Shanghai
Importerad till AUS: SIHAO PTY LTD . 1 ROKEVA STREETEASTWOOD NSW 2122 Australien
till **USA:** Sanven Technology Ltd. Suite 250, 9166 Anaheim Place, Rancho Cucamonga, CA 91730

UK	**REP**

Pooledas Group Ltd
Unit 5 Albert Edward House, The Pavilions
Preston, United Kingdom

EC	**REP**

SHUNSHUN GmbH
Römeräcker 9 Z2021, 76351
Linkenheim-Hochstetten, Germany

Tillverkad i Kina

VEVOR®

TOUGH TOOLS, HALF PRICE

Teknisk Support och e-garanticertifikat

www.vevor.com/support