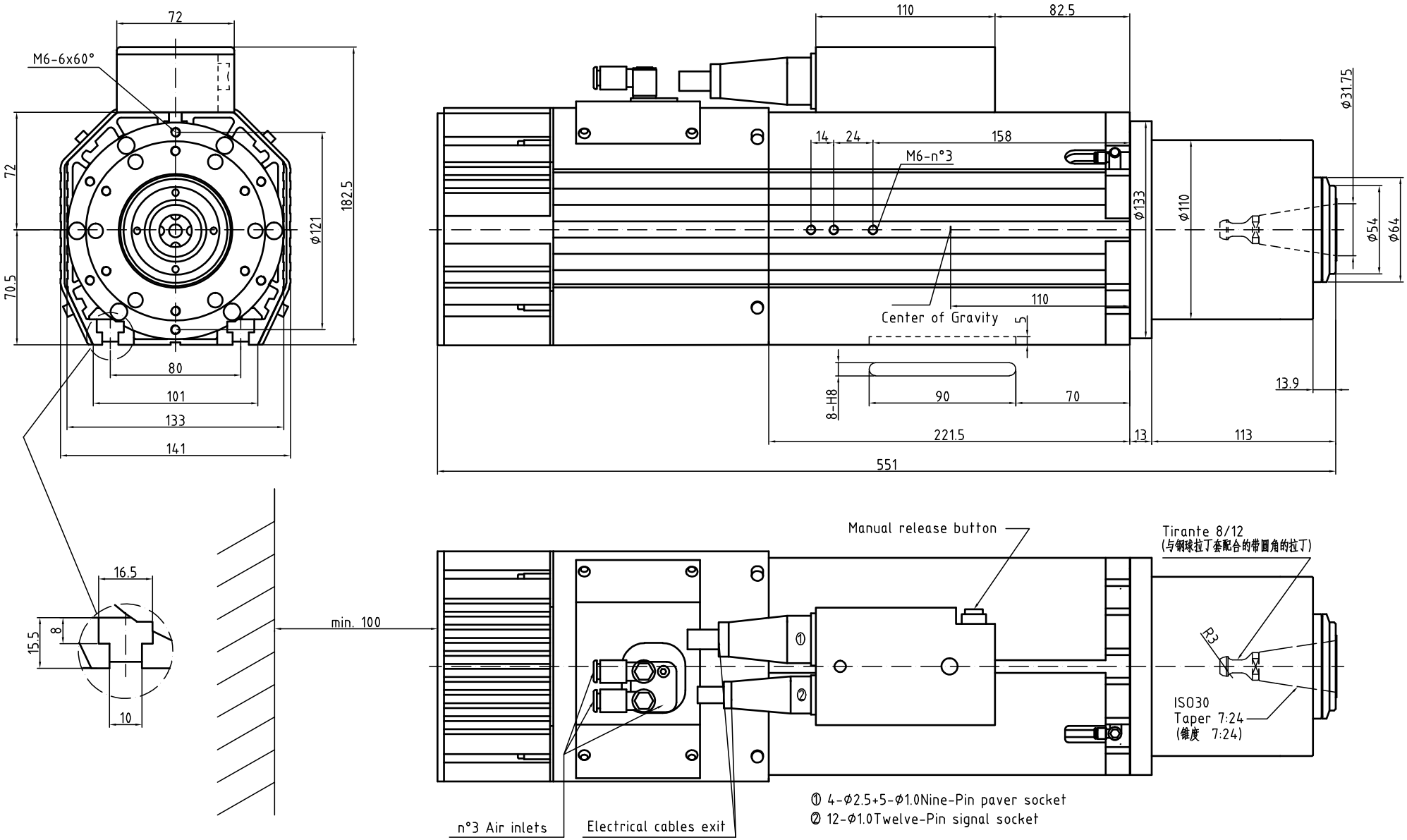

GDL70-24Z/9.0 Long nose

9kW 380V 18.2A 400Hz 24000RPM 31Kg