VEVOR®

TOUGH TOOLS, HALF PRICE

Technical Support and E-Warranty Certificate www.vevor.com/support

PILLAR TYPE CAT TREES

USER MANUAL

We continue to be committed to provide you tools with competitive price.
"Save Half", "Half Price" or any other similar expressions used by us only represents an estimate of savings you might benefit from buying certain tools with us compared to the major top brands and does not necessarily mean to cover all categories of tools offered by us. You are kindly reminded to verify carefully when you are placing an order with us if you are actually saving half in comparison with the top major brands.

VEVOR®

TOUGH TOOLS, HALF PRICE

PILLAR TYPE CAT TREES

MODEL: CAT790

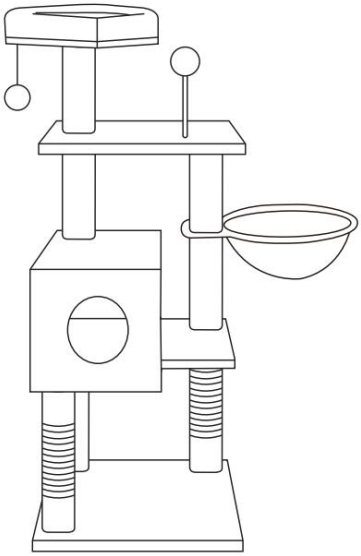

NEED HELP? CONTACT US!

Have product questions? Need technical support? Please feel free to contact us:

Technical Support and E-Warranty Certificate
www.vevor.com/support

This is the original instruction, please read all manual instructions carefully before operating. VEVOR reserves a clear interpretation of our user manual. The appearance of the product shall be subject to the product you received. Please forgive us that we won't inform you again if there are any technology or software updates on our product.

SAFETY INSTRUCTIONS

WARNING:

Read this instructions carefully before using this product. Failure to do so can result in serious injury.

Assembly precautions

1. Assemble only should be according to these instructions. Improper assembly can result in hazards.
2. Wear ANSI-approved safety goggles and heavy-duty work gloves during assembly.
3. Keep the assembly area clean and well-lit.
4. Keep bystanders out of the area during assembly.
5. Do not assemble when tired or when under the influence of alcohol, drugs or medication.
6. The product capabilities apply to properly and completely assembled products only.
7. Assemble on a flat, level, hard and smooth surface capable of safely supporting the Pillar Type Cat Trees.
8. For additional information regarding the parts listed in the following pages, please refer to the Assembly Diagram of this manual. Unwrap and separate all parts in a clean work area.

Use precautions

1. This product is not a toy. Do not allow children to play with or near this item.
2. Do not exceed weight capacities.
3. Use only on a flat, level, hard and smooth surface capable of safely supporting a fully loaded Pillar Type Cat Trees.
4. Use as intended only.
5. Inspect before every use; do not use if parts are loose or damaged.

SAVE THESE INSTRUCTIONS

PARTS LIST

1		1pc		10		1pc	23cm
2		1pc		11		1pc	22.5cm
3		1pc		12		4pcs	22cm
4		1pc		13		1pc	
5		1pc		A		15pcs	M8*35mm
6		1pc		B		3pcs	M8*80mm
7		2pcs	35cm	C		1pc	
8		1pc	35cm	D		1pc	
9		2pcs	22.5cm				

ASSEMBLY STEP

Step1：Install 12 inside the four corners of Cat House 2 for supported.

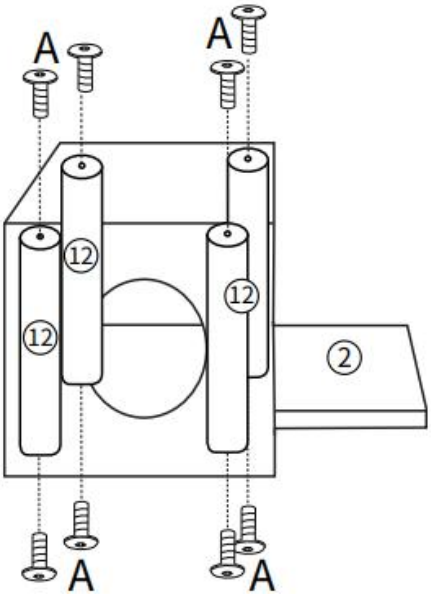

Step2：Install 7 and 8 to 1 for supported.

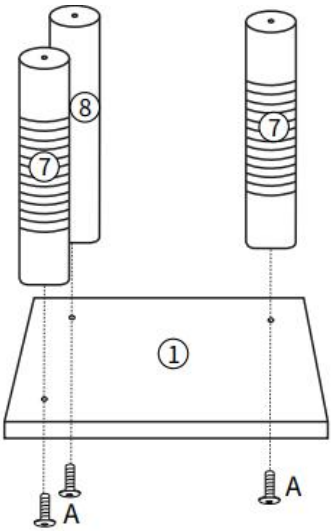

Step3：Install the whole completed in Step 1 to the whole completed in Step 2 as Below.

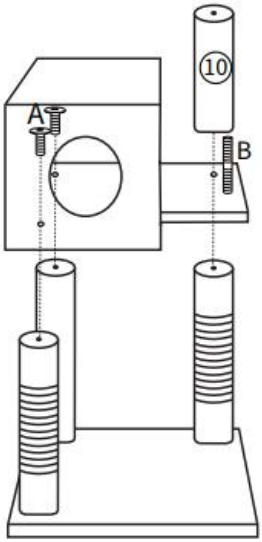

Step4：Install 4,9 as showed below.

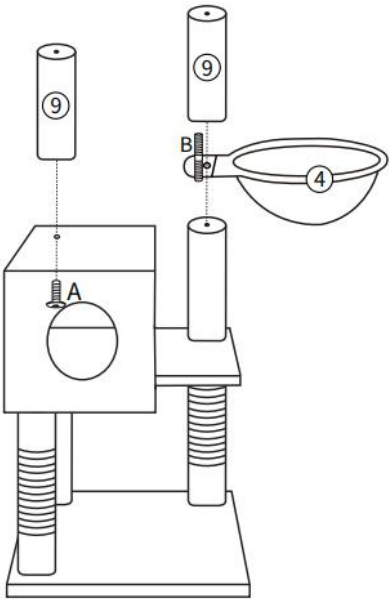

Step5：Install 3,6,11,5,13 to the top.

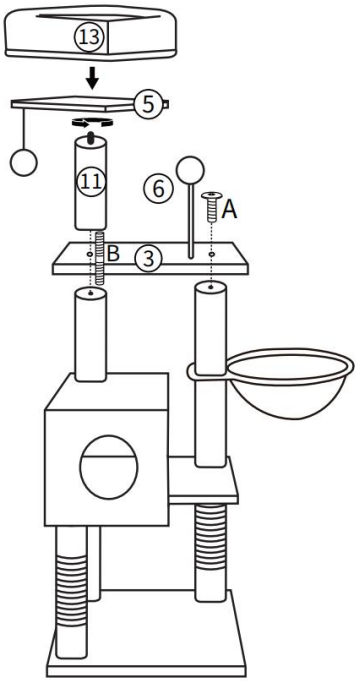

Step6：Finally, attach the entire cat tree to the wall.

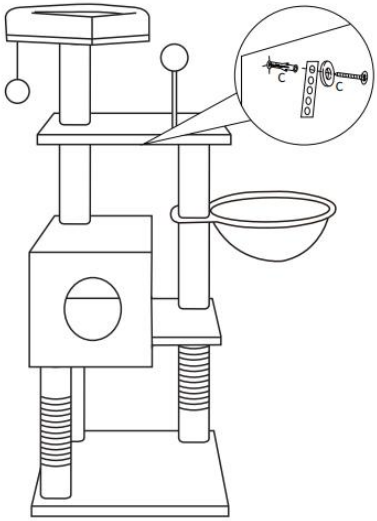

PRODUCT PARAMETER

Model	**CAT790**
Colour	Light Gray or Deep Gray
Type	5 floors with 1 cat house
Material	Particleboard, Paper tube column, Plush, Sisal

Manufacturer: Shanghaimuxinmuyeyouxiangongsi
Address: Shuangchenglu 803nong11hao1602A-1609shi, baoshanqu, shanghai 200000 CN.
Imported to AUS: SIHAO PTY LTD. 1 ROKEVA STREETEASTWOOD NSW 2122 Australia
Imported to USA: Sanven Technology Ltd. Suite 250, 9166 Anaheim Place, Rancho Cucamonga, CA 91730

EC	REP

E-CrossStu GmbH
Mainzer Landstr.69, 60329 Frankfurt am Main.

UK	REP

YH CONSULTING LIMITED.
C/O YH Consulting Limited Office 147, Centurion House,
London Road, Staines-upon-Thames, Surrey, TW18 4AX

VEVOR®

TOUGH TOOLS, HALF PRICE

Technical Support and E-Warranty Certificate

www.vevor.com/support

VEVOR®

TOUGH TOOLS, HALF PRICE

Technisch Support- und E-Garantie-Zertifikat www.vevor.com/support

SÄULENARTIGE KRATZBÄUME

Benutzerhandbuch

We continue to be committed to provide you tools with competitive price.
"Save Half", "Half Price" or any other similar expressions used by us only represents an estimate of savings you might benefit from buying certain tools with us compared to the major top brands and does not necessarily mean to cover all categories of tools offered by us. You are kindly reminded to verify carefully when you are placing an order with us if you are actually saving half in comparison with the top major brands.

VEVOR®

TOUGH TOOLS, HALF PRICE

PILLAR TYPE CAT TREES

MODELL: CAT790

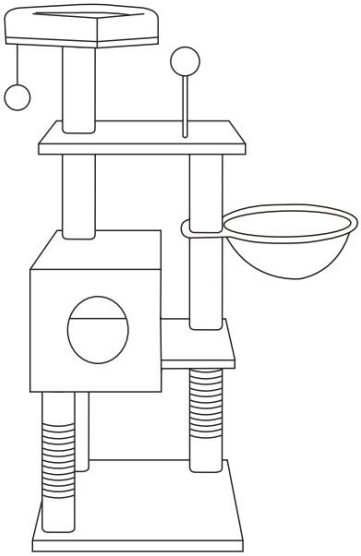

NEED HELP? CONTACT US!

Have product questions? Need technical support? Please feel free to contact us:

Technical Support and E-Warranty Certificate
www.vevor.com/support

This is the original instruction, please read all manual instructions carefully before operating. VEVOR reserves a clear interpretation of our user manual. The appearance of the product shall be subject to the product you received. Please forgive us that we won't inform you again if there are any technology or software updates on our product.

SAFETY INSTRUCTIONS

WARNUNG:

Lesen Sie diese Anleitung sorgfältig durch , bevor Sie dieses Produkt verwenden. Andernfalls kann es zu schweren Verletzungen kommen.

Vorsichtsmaßnahmen bei der Montage

9. Der Zusammenbau sollte nur gemäß dieser Anleitung erfolgen. Durch unsachgemäße Montage können Gefahren entstehen.
10. Tragen Sie während der Montage eine ANSI-zugelassene Schutzbrille und strapazierfähige Arbeitshandschuhe.
11. Halten Sie den Montagebereich sauber und gut beleuchtet.
12. Halten Sie Unbeteiligte während der Montage vom Bereich fern.
13. Nicht aufbauen, wenn Sie müde sind oder unter dem Einfluss von Alkohol, Drogen oder Medikamenten stehen.
14. Die Produkteigenschaften gelten nur für ordnungsgemäß und vollständig montierte Produkte.
15. Auf einer flachen, ebenen, harten und glatten Oberfläche montieren, auf der die Säulen-Kratzbäume sicher getragen werden können.
16. Weitere Informationen zu den auf den folgenden Seiten aufgeführten Teilen finden Sie im Montagediagramm dieser Anleitung. Packen Sie alle Teile aus und trennen Sie sie an einem sauberen Arbeitsplatz.

Treffen Sie Vorsichtsmaßnahmen

6. Dieses Produkt ist kein Spielzeug. Erlauben Sie Kindern nicht, mit oder in der Nähe dieses Artikels zu spielen.
7. Überschreiten Sie nicht die Gewichtskapazität.
8. Nur auf einer flachen, ebenen, harten und glatten Oberfläche verwenden, die einen voll beladenen Säulenkratzbaum sicher tragen kann.
9. Nur bestimmungsgemäß verwenden.
10. Vor jedem Gebrauch prüfen; nicht verwenden, wenn Teile lose oder beschädigt sind.

ANLEITUNG AUFBEWAHREN

PARTS LIST

1		1pc		10		1pc	23cm
2		1pc		11		1pc	22.5cm
3		1pc		12		4pcs	22cm
4		1pc		13		1pc	
5		1pc		A		15pcs	M8*35mm
6		1pc		B		3pcs	M8*80mm
7		2pcs	35cm	C		1pc	
8		1pc	35cm	D		1pc	
9		2pcs	22.5cm				

ASSEMBLY STEP

Schritt 1: Installieren Sie 12 zur Unterstützung in den vier Ecken von Katzenhaus 2.

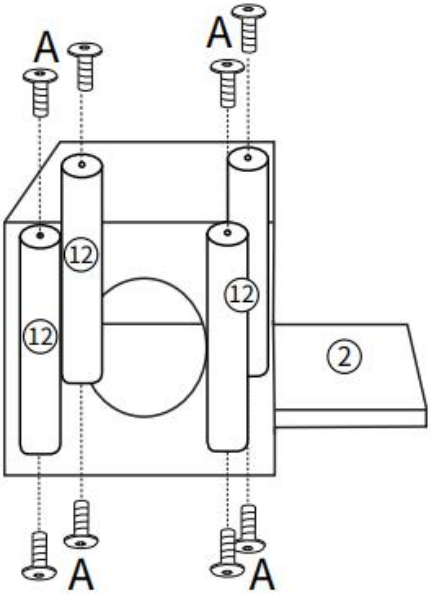

Schritt 2: Installieren Sie 7 und 8 auf 1 für Unterstützung.

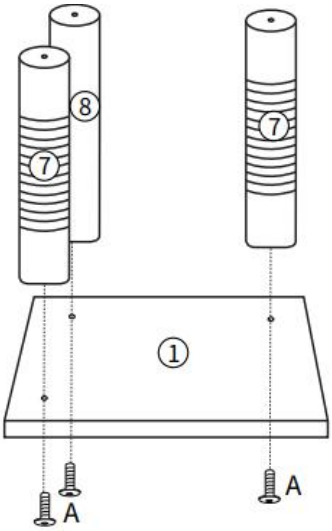

Schritt 3: Installieren Sie das Ganze, das in Schritt 1 abgeschlossen wurde, an das

Ganze, das in Schritt 2 abgeschlossen wurde, wie Unten.

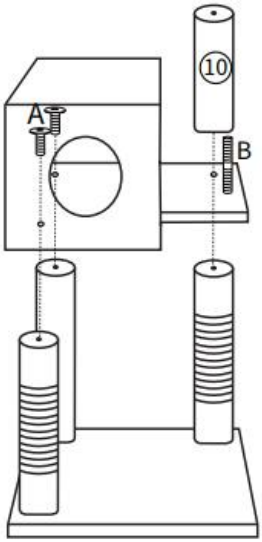

Schritt 4: Installieren Sie 4,9 wie unten gezeigt.

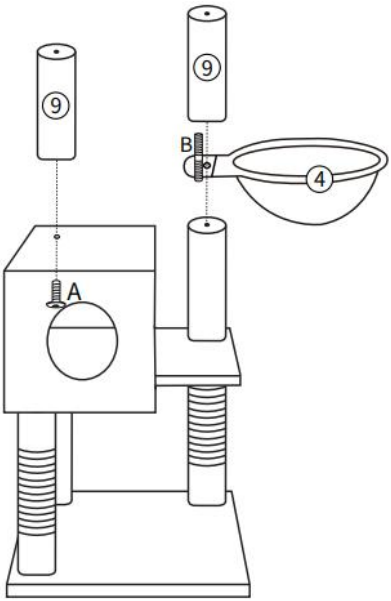

Schritt 5: Installieren Sie 3, 6, 11, 5, 13 nach oben.

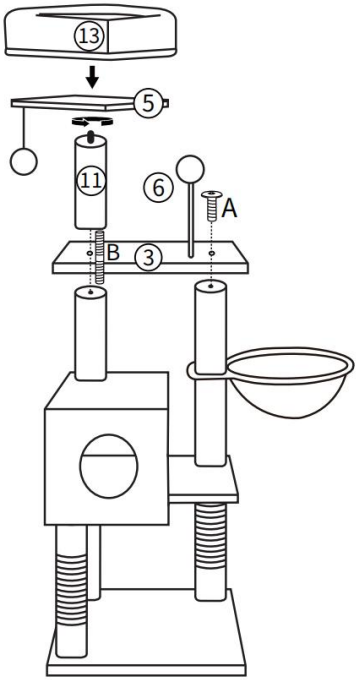

Schritt 6: Befestigen Sie abschließend den gesamten Kratzbaum an der Wand.

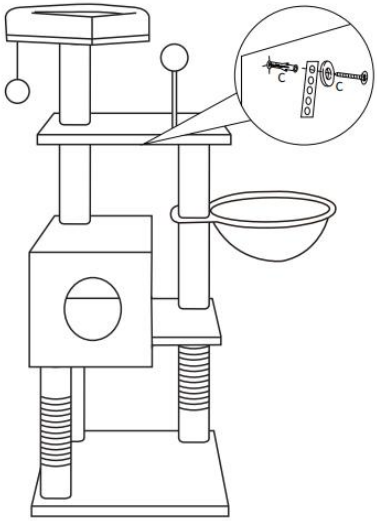

PRODUCT PARAMETER

Modell	**CAT790**
Farbe	Hellgrau oder Dunkelgrau
Typ	5 Etagen mit 1 Katzenhaus
Material	Spanplatte, Papierrohrsäule, Plüsch, Sisal

Hersteller : Shanghaimuxinmuyeyouxiangongsi
Adresse: Shuangchenglu 803nong11hao1602A-1609shi, baoshanqu, Shanghai 200000 CN.
Importiert nach AUS: SIHAO PTY LTD. 1 ROKEVA STREETEASTWOOD NSW 2122 Australien
In die USA importiert: Sanven Technology Ltd. Suite 250, 9166 Anaheim Place, Rancho Cucamonga, CA 91730

EC REP

E-CrossStu GmbH
Mainzer Landstr.69, 60329 Frankfurt am Main.

UK REP

YH CONSULTING LIMITED.
C/O YH Consulting Limited Office 147, Centurion House,
London Road, Staines-upon-Thames, Surrey, TW18 4AX

VEVOR®

TOUGH TOOLS, HALF PRICE

Technisch Support- und E-Garantiezertifikat

www.vevor.com/support

VEVOR®

TOUGH TOOLS, HALF PRICE

Technique Assistance et certificat de garantie électronique

www.vevor.com/support

ARBRES À CHAT DE TYPE PILIER

MANUEL DE l' Utilisateur

We continue to be committed to provide you tools with competitive price.
"Save Half", "Half Price" or any other similar expressions used by us only represents an estimate of savings you might benefit from buying certain tools with us compared to the major top brands and does not necessarily mean to cover all categories of tools offered by us. You are kindly reminded to verify carefully when you are placing an order with us if you are actually saving half in comparison with the top major brands.

VEVOR®

TOUGH TOOLS, HALF PRICE

PILLAR TYPE CAT TREES

MODÈLE : CAT790

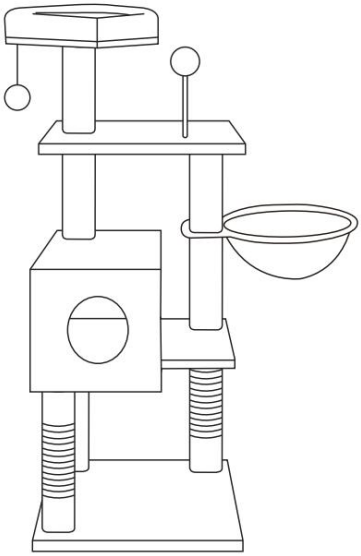

NEED HELP? CONTACT US!

Have product questions? Need technical support? Please feel free to contact us:

Technical Support and E-Warranty Certificate
www.vevor.com/support

This is the original instruction, please read all manual instructions carefully before operating. VEVOR reserves a clear interpretation of our user manual. The appearance of the product shall be subject to the product you received. Please forgive us that we won't inform you again if there are any technology or software updates on our product.

AVERTISSEMENT:
attentivement ces instructions avant d'utiliser ce produit. Ne pas le faire peut entraîner des blessures graves.

Précautions de montage

17. L'assemblage doit uniquement se faire selon ces instructions. Un assemblage incorrect peut entraîner des dangers.
18. Portez des lunettes de sécurité approuvées par l'ANSI et des gants de travail robustes pendant l'assemblage.
19. Gardez la zone de rassemblement propre et bien éclairée.
20. Gardez les spectateurs hors de la zone pendant l'assemblage.
21. Ne vous rassemblez pas lorsque vous êtes fatigué ou sous l’influence de l’alcool, de drogues ou de médicaments.
22. Les capacités du produit s'appliquent uniquement aux produits correctement et complètement assemblés.
23. Assemblez-le sur une surface plane, nivelée, dure et lisse, capable de supporter en toute sécurité les arbres à chat de type pilier.
24. Pour plus d'informations concernant les pièces répertoriées dans les pages suivantes, veuillez vous référer au schéma d'assemblage de ce manuel. Déballez et séparez toutes les pièces dans une zone de travail propre.

Utiliser des précautions

11. Ce produit n'est pas un jouet. Ne laissez pas les enfants jouer avec ou à proximité de cet article.
12. Ne dépassez pas les capacités de poids.
13. Utiliser uniquement sur une surface plane, nivelée, dure et lisse, capable de supporter en toute sécurité un arbre à chat de type pilier entièrement chargé.
14. Utiliser uniquement comme prévu.
15. Inspectez avant chaque utilisation ; ne pas utiliser si les pièces sont

desserrées ou endommagées.

CONSERVEZ CES INSTRUCTIONS

PARTS LIST

1		1pc		10		1pc	23cm
2		1pc		11		1pc	22.5cm
3		1pc		12		4pcs	22cm
4		1pc		13		1pc	
5		1pc		A		15pcs	M8*35mm
6		1pc		B		3pcs	M8*80mm
7		2pcs	35cm	C		1pc	
8		1pc	35cm	D		1pc	
9		2pcs	22.5cm				

ASSEMBLY STEP

Étape 1 : installez 12 à l'intérieur des quatre coins de Cat House 2 pour le support.

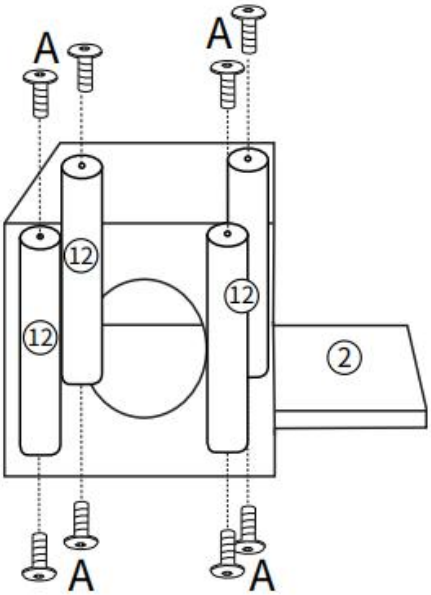

Étape 2 : installez 7 et 8 sur 1 pour être pris en charge.

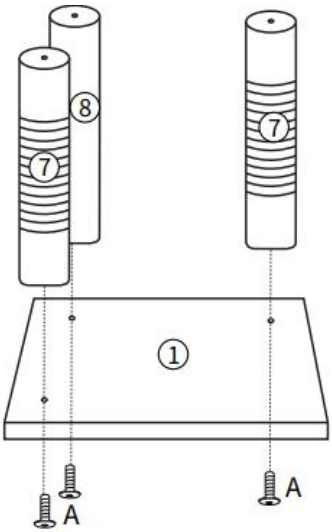

Étape 3 : installez l'ensemble terminé à l'étape 1 sur l'ensemble terminé à l'étape 2 comme

Ci-dessous.

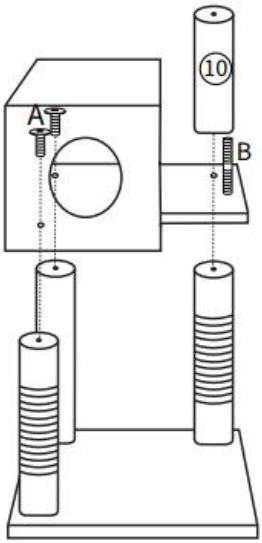

Étape 4 : Installez 4,9 comme indiqué ci-dessous.

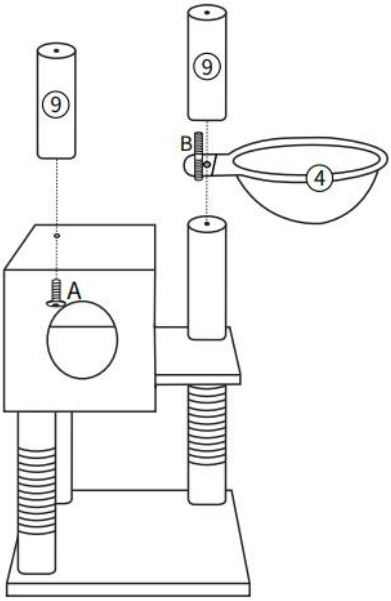

Étape 5 : installez 3,6,11,5,13 en haut.

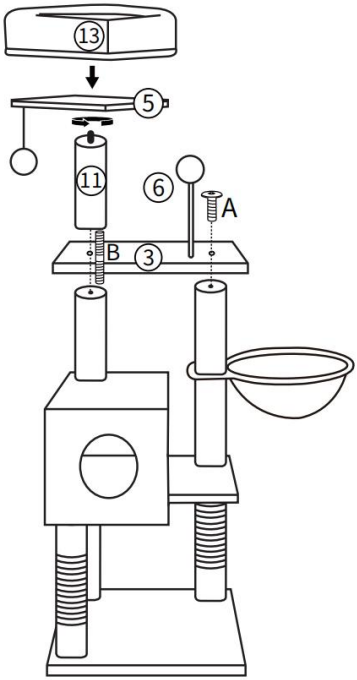

Étape 6 : Enfin, fixez l'ensemble de l'arbre à chat au mur.

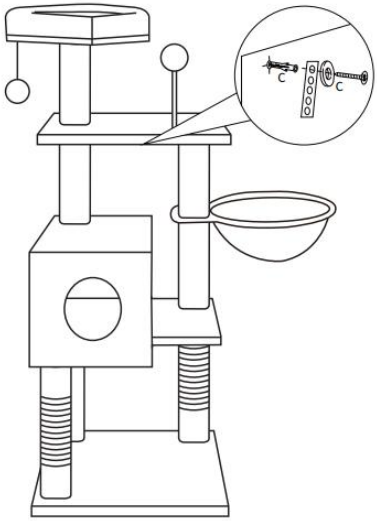

PRODUCT PARAMETER

Modèle	**CAT790**
Couleur	Gris clair ou gris foncé
Taper	5 étages avec 1 maison pour chat
Matériel	Panneau de particules, Colonne en tube de papier, Peluche, Sisal

Fabricant : Shanghaimuxinmuyeyouxiangongsi
Adresse : Shuangchenglu 803nong11hao1602A-1609shi, baoshanqu, Shanghai 200000 CN.
Importé en Australie : SIHAO PTY LTD. 1 ROKEVA STREETASTWOOD NSW 2122 Australie
Importé aux États-Unis : Sanven Technology Ltd. Suite 250, 9166 Anaheim Place, Rancho Cucamonga, CA 91730

EC REP

E-CrossStu GmbH
Mainzer Landstr.69, 60329 Frankfurt am Main.

UK REP

YH CONSULTING LIMITED.
C/O YH Consulting Limited Office 147, Centurion House,
London Road, Staines-upon-Thames, Surrey, TW18 4AX

VEVOR®

TOUGH TOOLS, HALF PRICE

Technique Assistance et certificat de garantie électronique

www.vevor.com/support

VEVOR®

TOUGH TOOLS, HALF PRICE

Technisch Ondersteuning en e-garantiecertificaat www.vevor.com/support

PIJLERTYPE KATTENBOMEN

Handleiding

We continue to be committed to provide you tools with competitive price.
"Save Half", "Half Price" or any other similar expressions used by us only represents an estimate of savings you might benefit from buying certain tools with us compared to the major top brands and does not necessarily mean to cover all categories of tools offered by us. You are kindly reminded to verify carefully when you are placing an order with us if you are actually saving half in comparison with the top major brands.

VEVOR®

TOUGH TOOLS, HALF PRICE

PILLAR TYPE CAT TREES

MODEL: CAT790

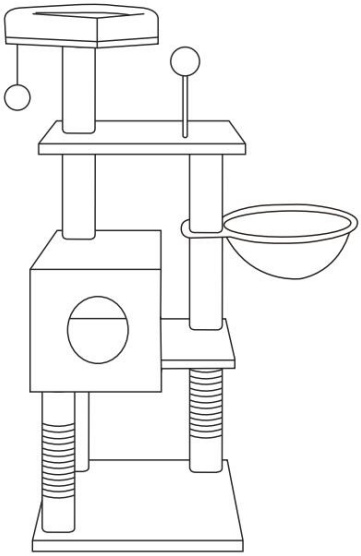

NEED HELP? CONTACT US!

Have product questions? Need technical support? Please feel free to contact us:

Technical Support and E-Warranty Certificate
www.vevor.com/support

This is the original instruction, please read all manual instructions carefully before operating. VEVOR reserves a clear interpretation of our user manual. The appearance of the product shall be subject to the product you received. Please forgive us that we won't inform you again if there are any technology or software updates on our product.

WAARSCHUWING:

Lees deze instructies zorgvuldig door voordat u dit product gebruikt. Als u dit niet doet, kan dit leiden tot ernstig letsel.

Voorzorgsmaatregelen voor montage

25. Alleen de montage dient volgens deze instructies te gebeuren. Onjuiste montage kan tot gevaren leiden.
26. Draag tijdens de montage een ANSI-goedgekeurde veiligheidsbril en stevige werkhandschoenen.
27. Houd de verzamelplaats schoon en goed verlicht.
28. Houd omstanders tijdens de montage uit de buurt.
29. Niet monteren als u moe bent of onder invloed bent van alcohol, drugs of medicijnen.
30. De productmogelijkheden zijn alleen van toepassing op correct en volledig gemonteerde producten.
31. Monteer op een vlakke, vlakke, harde en gladde ondergrond die de kattenbomen van het pilaartype veilig kan ondersteunen.
32. Voor aanvullende informatie over de onderdelen die op de volgende pagina's worden vermeld, verwijzen wij u naar het montageschema van deze handleiding. Pak alle onderdelen uit en scheid ze van elkaar op een schone werkplek.

Gebruik voorzorgsmaatregelen

16. Dit product is geen speelgoed. Laat kinderen niet met of in de buurt van dit artikel spelen.
17. Overschrijd de gewichtscapaciteiten niet.
18. Alleen gebruiken op een vlakke, vlakke, harde en gladde ondergrond die een volledig geladen pilaartype kattenboom veilig kan ondersteunen.
19. Alleen gebruiken zoals bedoeld.
20. Inspecteer vóór elk gebruik; niet gebruiken als onderdelen los of beschadigd zijn.

BEWAAR DEZE INSTRUCTIES

PARTS LIST

1		1pc		10		1pc	23cm
2		1pc		11		1pc	22.5cm
3		1pc		12		4pcs	22cm
4		1pc		13		1pc	
5		1pc		A		15pcs	M8*35mm
6		1pc		B		3pcs	M8*80mm
7		2pcs	35cm	C		1pc	
8		1pc	35cm	D		1pc	
9		2pcs	22.5cm				

ASSEMBLY STEP

Stap 1: Installeer 12 in de vier hoeken van Cat House 2 voor ondersteuning.

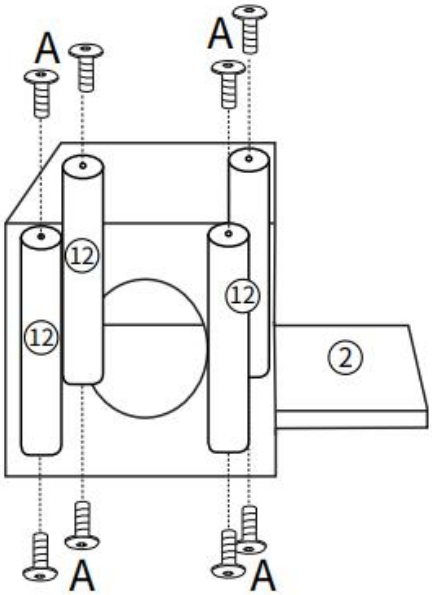

Stap 2: Installeer 7 en 8 op 1 voor ondersteuning.

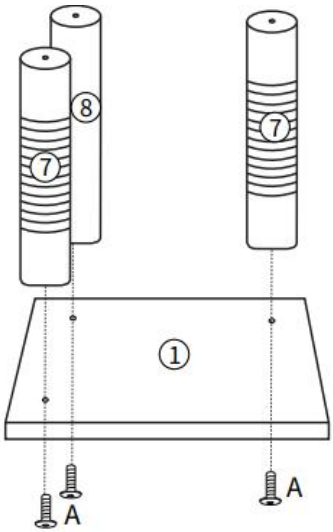

Stap3: Installeer het geheel voltooid in stap 1 op het geheel voltooid in stap 2 als Onderstaand.

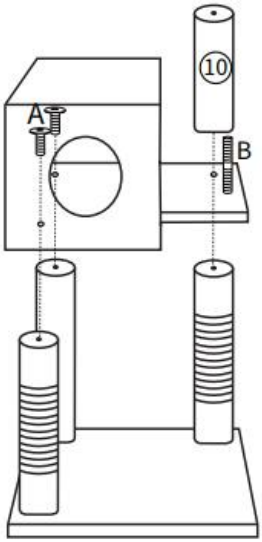

Stap 4: Installeer 4,9 zoals hieronder weergegeven.

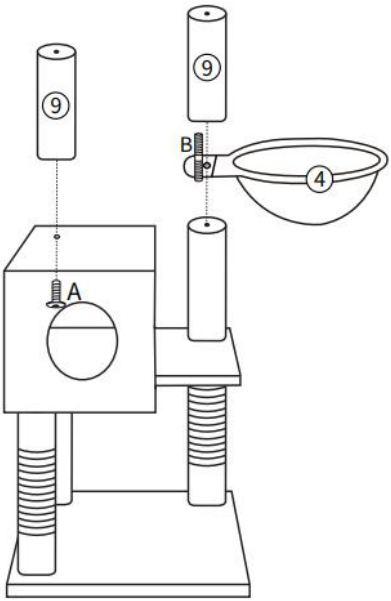

Stap 5: Installeer 3,6,11,5,13 bovenaan.

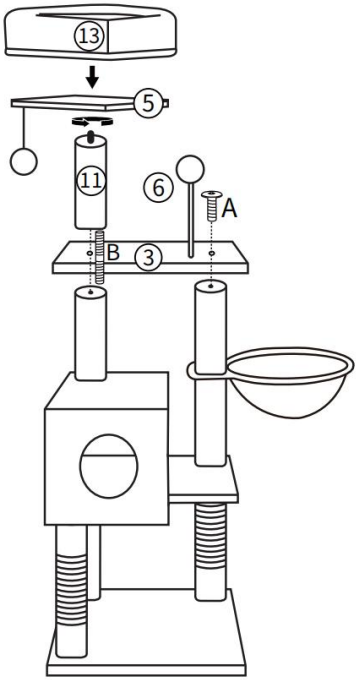

Stap6: Bevestig ten slotte de hele kattenboom aan de muur.

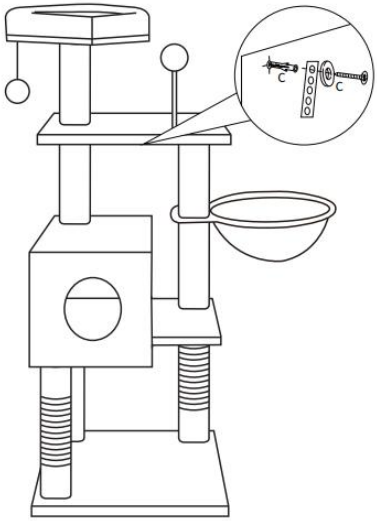

PRODUCT PARAMETER

Model	**CAT790**
Kleur	Lichtgrijs of diepgrijs
Type	5 verdiepingen met 1 kattenhuis
Materiaal	Spaanplaat, kolom van papieren buizen, pluche, sisal

Fabrikant : Shanghaimuxinmuyeyouxiangongsi
Adres: Shuangchenglu 803nong11hao1602A-1609shi, baoshanqu, shanghai 200000 CN.
Geïmporteerd naar AUS: SIHAO PTY LTD. 1 ROKEVA STREETEASTWOOD NSW 2122 Australië
Geïmporteerd naar de VS: Sanven Technology Ltd. Suite 250, 9166 Anaheim Place, Rancho Cucamonga, CA 91730

EC REP

E-CrossStu GmbH
Mainzer Landstr.69, 60329 Frankfurt am Main.

UK REP

YH CONSULTING LIMITED.
C/O YH Consulting Limited Office 147, Centurion House,
London Road, Staines-upon-Thames, Surrey, TW18 4AX

VEVOR®

TOUGH TOOLS, HALF PRICE

Technisch Ondersteuning en e-garantiecertificaat

www.vevor.com/support

VEVOR®

TOUGH TOOLS, HALF PRICE

Teknisk Support och e-garanticertifikat www.vevor.com/support

PELARTYP KATTTRÄD

Användarmanual

We continue to be committed to provide you tools with competitive price.
"Save Half", "Half Price" or any other similar expressions used by us only represents an estimate of savings you might benefit from buying certain tools with us compared to the major top brands and does not necessarily mean to cover all categories of tools offered by us. You are kindly reminded to verify carefully when you are placing an order with us if you are actually saving half in comparison with the top major brands.

VEVOR®

TOUGH TOOLS, HALF PRICE

PILLAR TYPE CAT TREES

MODELL: CAT790

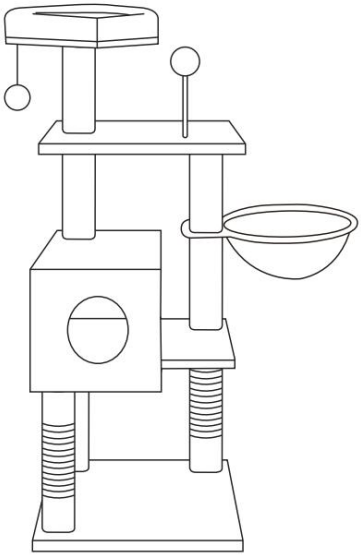

NEED HELP? CONTACT US!

Have product questions? Need technical support? Please feel free to contact us:

Technical Support and E-Warranty Certificate
www.vevor.com/support

This is the original instruction, please read all manual instructions carefully before operating. VEVOR reserves a clear interpretation of our user manual. The appearance of the product shall be subject to the product you received. Please forgive us that we won't inform you again if there are any technology or software updates on our product.

VARNING:

Läs dessa instruktioner noggrant innan du använder denna produkt. Underlåtenhet att göra det kan resultera i allvarliga skador.

Försiktighetsåtgärder vid montering

33. Endast montering ska ske enligt dessa instruktioner. Felaktig montering kan leda till faror.
34. Använd ANSI-godkända skyddsglasögon och kraftiga arbetshandskar vid montering.
35. Håll monteringsområdet rent och väl upplyst.
36. Håll åskådare borta från området under monteringen.
37. Sätt dig inte ihop när du är trött eller påverkad av alkohol, droger eller mediciner.
38. Produktegenskaperna gäller endast för korrekt och färdigmonterade produkter.
39. Montera på en plan, jämn, hård och slät yta som säkert kan stödja kattträden av pelartyp.
40. För ytterligare information om delarna som listas på följande sidor, se monteringsdiagrammet i denna manual. Packa upp och separera alla delar på ett rent arbetsområde.

Använd försiktighetsåtgärder

21. Denna produkt är inte en leksak. Låt inte barn leka med eller nära detta föremål.
22. Överskrid inte viktkapaciteten.
23. Använd endast på en plan, jämn, hård och slät yta som säkert kan stödja en fullastad pelartyp Kattträd.
24. Använd endast som avsett.
25. Inspektera före varje användning; Använd inte om delar är lösa eller skadade.

SPARA DESSA INSTRUKTIONER

PARTS LIST

1		1pc		10		1pc	23cm
2		1pc		11		1pc	22.5cm
3		1pc		12		4pcs	22cm
4		1pc		13		1pc	
5		1pc		A		15pcs	M8*35mm
6		1pc		B		3pcs	M8*80mm
7		2pcs	35cm	C		1pc	
8		1pc	35cm	D		1pc	
9		2pcs	22.5cm				

ASSEMBLY STEP

Steg 1: Installera 12 inuti de fyra hörnen av Cat House 2 för stöd.

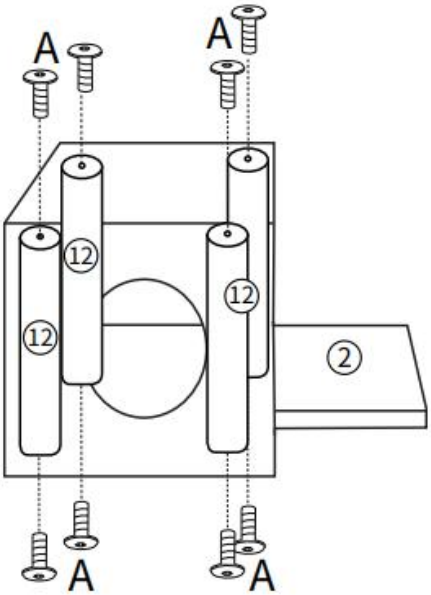

Steg 2: Installera 7 och 8 till 1 för stöd.

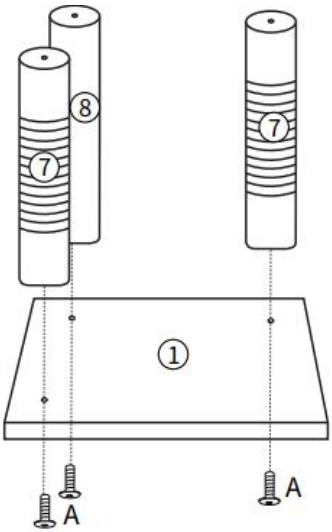

Steg 3: Installera hela som slutfördes i steg 1 till hela som slutfördes i steg 2 som Nedan.

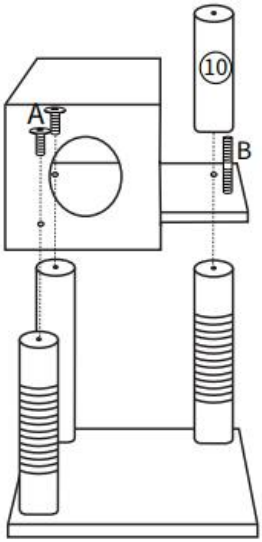

Steg 4: Installera 4,9 som visas nedan.

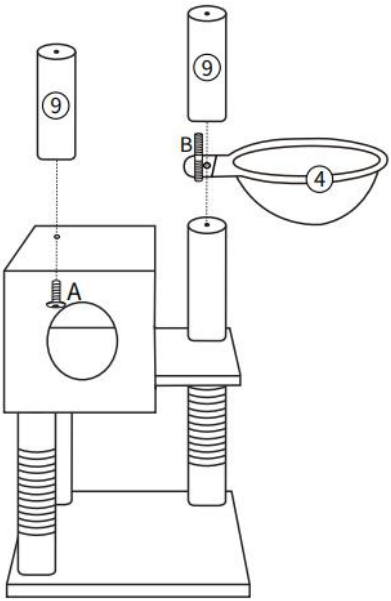

Steg 5: Installera 3,6,11,5,13 till toppen.

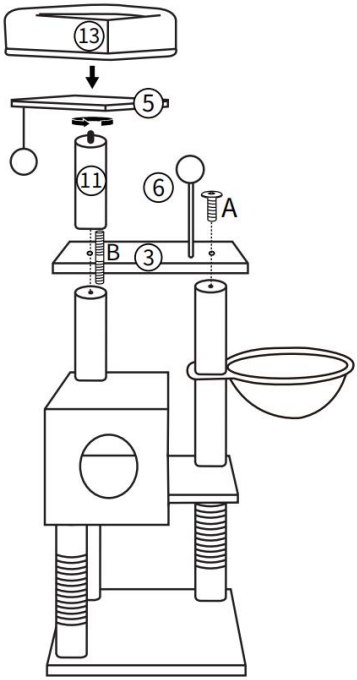

Steg 6: Fäst slutligen hela kattträdet på väggen.

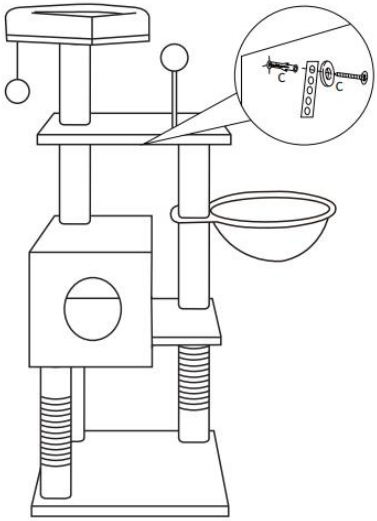

PRODUCT PARAMETER

Modell	**CAT790**
Färg	Ljusgrå eller djupgrå
Typ	5 våningar med 1 katthus
Material	Spånskiva, Pappersrörpelare, Plysch, Sisal

Tillverkare : Shanghaimuxinmuyeyouxiangongsi
Adress: Shuangchenglu 803nong11hao1602A-1609shi, baoshanqu, shanghai 200000 CN.
Importerad till AUS: SIHAO PTY LTD. 1 ROKEVA STREETEASTWOOD NSW 2122 Australien
Importerad till USA: Sanven Technology Ltd. Suite 250, 9166 Anaheim Place, Rancho Cucamonga, CA 91730

EC	REP

E-CrossStu GmbH
Mainzer Landstr.69, 60329 Frankfurt am Main.

UK	REP

YH CONSULTING LIMITED.
C/O YH Consulting Limited Office 147, Centurion House,
London Road, Staines-upon-Thames, Surrey, TW18 4AX

VEVOR®

TOUGH TOOLS, HALF PRICE

Teknisk Support och e-garanticertifikat

www.vevor.com/support

VEVOR®

TOUGH TOOLS, HALF PRICE

Técnico Soporte y certificado de garantía electrónica www.vevor.com/support

ÁRBOLES PARA GATOS TIPO PILAR

de USUARIO

We continue to be committed to provide you tools with competitive price.
"Save Half", "Half Price" or any other similar expressions used by us only represents an estimate of savings you might benefit from buying certain tools with us compared to the major top brands and does not necessarily mean to cover all categories of tools offered by us. You are kindly reminded to verify carefully when you are placing an order with us if you are actually saving half in comparison with the top major brands.

VEVOR®

TOUGH TOOLS, HALF PRICE

PILLAR TYPE CAT TREES

MODELO: CAT790

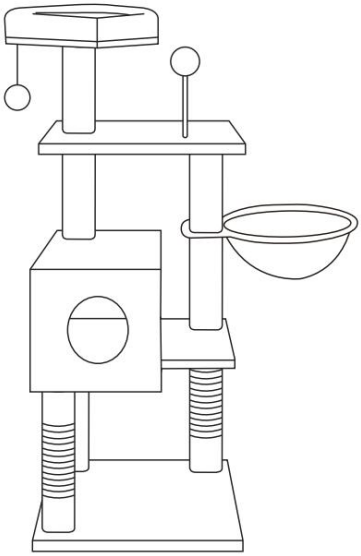

NEED HELP? CONTACT US!

Have product questions? Need technical support? Please feel free to contact us:

Technical Support and E-Warranty Certificate
www.vevor.com/support

This is the original instruction, please read all manual instructions carefully before operating. VEVOR reserves a clear interpretation of our user manual. The appearance of the product shall be subject to the product you received. Please forgive us that we won't inform you again if there are any technology or software updates on our product.

ADVERTENCIA:
atentamente estas instrucciones antes de utilizar este producto. De lo contrario, se pueden producir lesiones graves.

Precauciones de montaje

41. El montaje únicamente debe realizarse de acuerdo con estas instrucciones. Un montaje inadecuado puede provocar peligros.
42. Use gafas de seguridad aprobadas por ANSI y guantes de trabajo resistentes durante el montaje.
43. Mantenga el área de reunión limpia y bien iluminada.
44. Mantenga a los transeúntes fuera del área durante el montaje.
45. No se reúna cuando esté cansado o bajo la influencia de alcohol, drogas o medicamentos.
46. Las capacidades del producto se aplican únicamente a productos ensamblados de manera adecuada y completa.
47. Ensamble sobre una superficie plana, nivelada, dura y lisa capaz de soportar de manera segura los árboles para gatos tipo pilar.
48. Para obtener información adicional sobre las piezas enumeradas en las siguientes páginas, consulte el diagrama de montaje de este manual. Desenvuelva y separe todas las piezas en un área de trabajo limpia.

Use precauciones

26. Este producto no es un juguete. No permita que los niños jueguen con este artículo o cerca de él.
27. No exceda las capacidades de peso.
28. Úselo únicamente sobre una superficie plana, nivelada, dura y lisa capaz de soportar de manera segura un árbol para gatos tipo pilar completamente cargado.
29. Úselo únicamente según lo previsto.
30. Inspeccionar antes de cada uso; no lo utilice si las piezas están sueltas o dañadas.

GUARDA ESTAS INSTRUCCIONES

PARTS LIST

1		1pc		10		1pc	23cm
2		1pc		11		1pc	22.5cm
3		1pc		12		4pcs	22cm
4		1pc		13		1pc	
5		1pc		A		15pcs	M8*35mm
6		1pc		B		3pcs	M8*80mm
7		2pcs	35cm	C		1pc	
8		1pc	35cm	D		1pc	
9		2pcs	22.5cm				

ASSEMBLY STEP

Paso 1: Instale 12 dentro de las cuatro esquinas de Cat House 2 para brindar soporte.

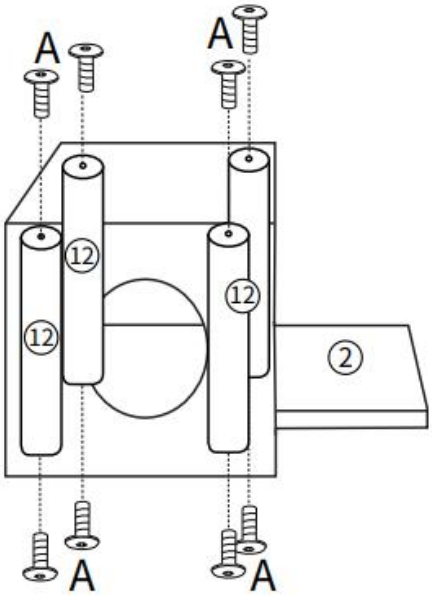

Paso 2: Instale 7 y 8 a 1 para ser compatibles.

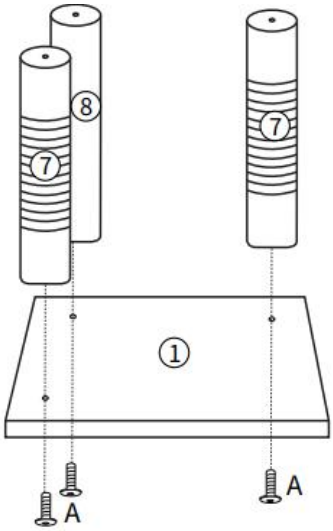

Paso 3: Instale todo lo completado en el Paso 1 en todo lo completado en el Paso

2 como
Abajo.

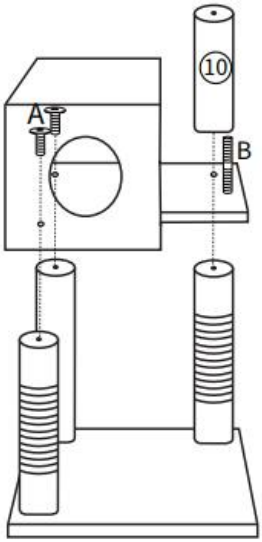

Paso 4: Instale 4,9 como se muestra a continuación.

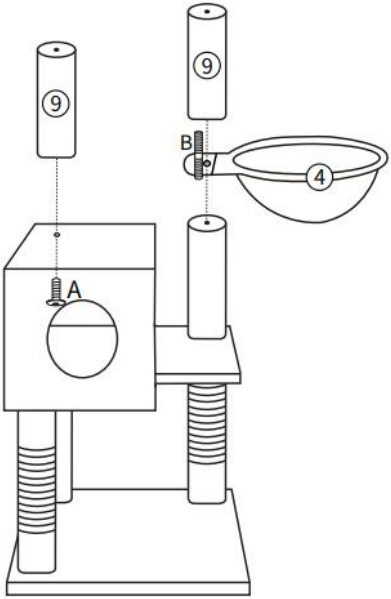

Paso 5: Instale 3,6,11,5,13 en la parte superior.

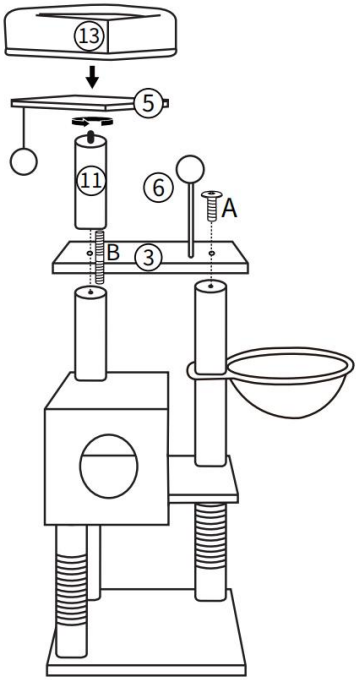

Paso 6: Finalmente, fije todo el árbol para gatos a la pared.

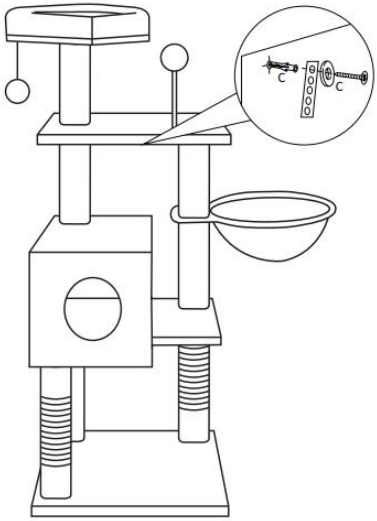

PRODUCT PARAMETER

Modelo	**CAT790**
Color	Gris claro o gris oscuro
Tipo	5 pisos con 1 casa para gatos
Material	Tablero de partículas, Columna de tubo de papel, Felpa, Sisal

Fabricante : Shanghaimuxinmuyeyouxiangongsi
Dirección: Shuangchenglu 803nong11hao1602A-1609shi, baoshanqu, shanghai 200000 CN.
Importado a AUS: SIHAO PTY LTD. 1 ROKEVA STREET ASTWOOD NSW 2122 Australia
Importado a EE. UU.: Sanven Technology Ltd. Suite 250, 9166 Anaheim Place, Rancho Cucamonga, CA 91730

EC REP

E-CrossStu GmbH
Mainzer Landstr.69, 60329 Frankfurt am Main.

UK REP

YH CONSULTING LIMITED.
C/O YH Consulting Limited Office 147, Centurion House,
London Road, Staines-upon-Thames, Surrey, TW18 4AX

VEVOR®

TOUGH TOOLS, HALF PRICE

Técnico Certificado de soporte y garantía electrónica

www.vevor.com/support

VEVOR®

TOUGH TOOLS, HALF PRICE

Tecnico Supporto e certificato di garanzia elettronica www.vevor.com/support

TIRAGRAFFI PER GATTI A COLONNA

MANUALE D' uso

We continue to be committed to provide you tools with competitive price.
"Save Half", "Half Price" or any other similar expressions used by us only represents an estimate of savings you might benefit from buying certain tools with us compared to the major top brands and does not necessarily mean to cover all categories of tools offered by us. You are kindly reminded to verify carefully when you are placing an order with us if you are actually saving half in comparison with the top major brands.

VEVOR®

TOUGH TOOLS, HALF PRICE

PILLAR TYPE CAT TREES

MODELLO: CAT790

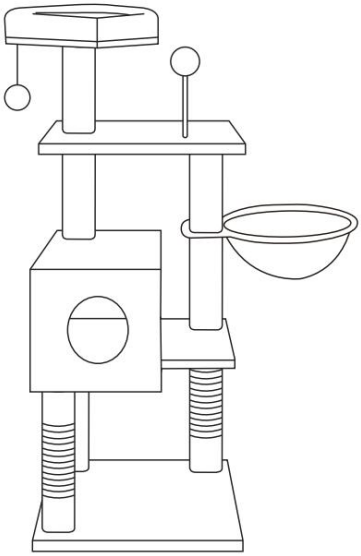

NEED HELP? CONTACT US!

Have product questions? Need technical support? Please feel free to contact us:

Technical Support and E-Warranty Certificate
www.vevor.com/support

This is the original instruction, please read all manual instructions carefully before operating. VEVOR reserves a clear interpretation of our user manual. The appearance of the product shall be subject to the product you received. Please forgive us that we won't inform you again if there are any technology or software updates on our product.

AVVERTIMENTO:
Leggere attentamente queste istruzioni prima di utilizzare questo prodotto. In caso contrario si potrebbero causare lesioni gravi.

Precauzioni per il montaggio

49. Solo il montaggio deve avvenire secondo queste istruzioni. Un montaggio improprio può comportare pericoli.
50. Indossare occhiali di sicurezza approvati ANSI e guanti da lavoro pesanti durante il montaggio.
51. Mantenere l'area di assemblaggio pulita e ben illuminata.
52. Tenere gli astanti lontani dall'area durante il montaggio.
53. Non montare in caso di stanchezza o sotto l'effetto di alcol, droghe o farmaci.
54. Le funzionalità del prodotto si applicano solo ai prodotti correttamente e completamente assemblati.
55. Montare su una superficie piana, livellata, dura e liscia in grado di sostenere in sicurezza i tiragraffi a colonna.
56. Per ulteriori informazioni riguardanti le parti elencate nelle pagine seguenti, fare riferimento allo Schema di Montaggio di questo manuale. Scartare e separare tutte le parti in un'area di lavoro pulita.

Usare precauzioni

31. Questo prodotto non è un giocattolo. Non permettere ai bambini di giocare con o vicino a questo oggetto.
32. Non superare le capacità di peso.
33. Utilizzare solo su una superficie piana, livellata, dura e liscia in grado di supportare in sicurezza un tiragraffi a colonna completamente carico.
34. Utilizzare solo come previsto.
35. Ispezionare prima di ogni utilizzo; non utilizzare se le parti sono allentate o danneggiate.

CONSERVARE QUESTE ISTRUZIONI

PARTS LIST

1		1pc		10		1pc	23cm
2		1pc		11		1pc	22.5cm
3		1pc		12		4pcs	22cm
4		1pc		13		1pc	
5		1pc		A		15pcs	M8*35mm
6		1pc		B		3pcs	M8*80mm
7		2pcs	35cm	C		1pc	
8		1pc	35cm	D		1pc	
9		2pcs	22.5cm				

ASSEMBLY STEP

Passaggio 1: installarne 12 all'interno dei quattro angoli di Cat House 2 per il supporto.

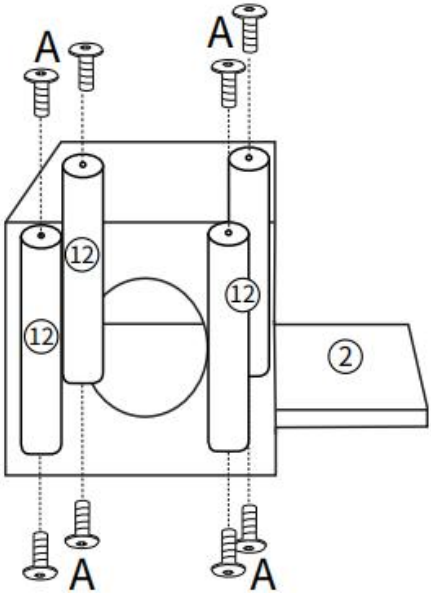

Passaggio 2: installare 7 e 8 a 1 per il supporto.

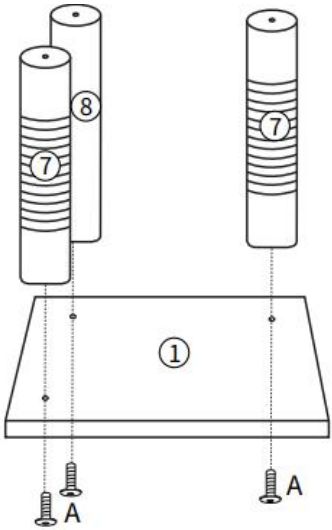

Passaggio 3: installare l'intero completato nel passaggio 1 sull'intero completato

nel passaggio 2 come
Sotto.

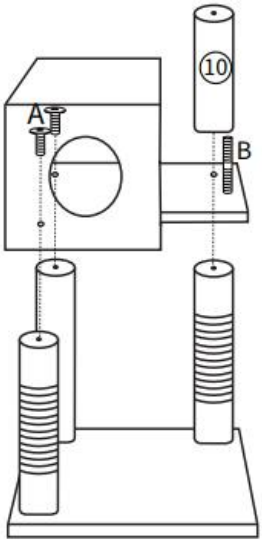

Passaggio 4: installare 4,9 come mostrato di seguito.

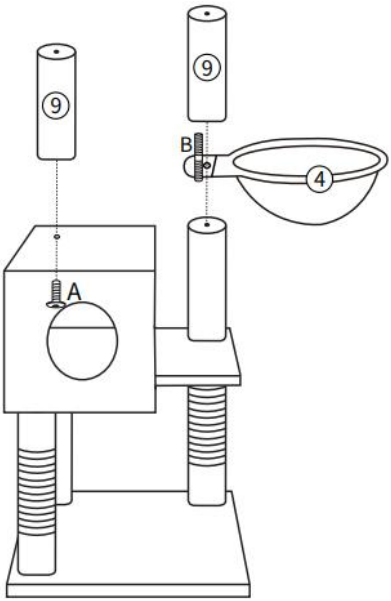

Passaggio 5: installare 3,6,11,5,13 in alto.

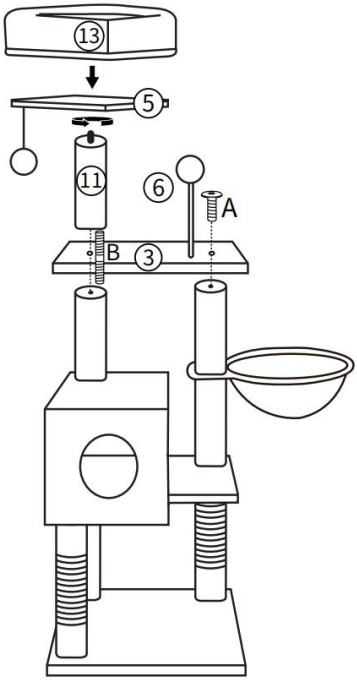

Passaggio 6: infine, fissa l'intero tiragraffi al muro.

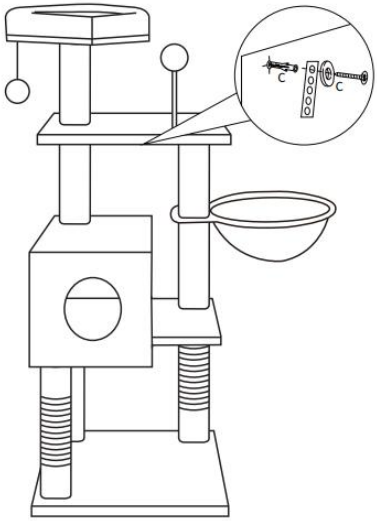

PRODUCT PARAMETER

Modello	**CAT790**
Colore	Grigio chiaro o grigio intenso
Tipo	5 piani con 1 casa per gatti
Materiale	Truciolare, Colonna in tubo di carta, Peluche, Sisal

Produttore : Shanghaimuxinmuyeyouxiangongsi
Indirizzo: Shuangchenglu 803nong11hao1602A-1609shi, baoshanqu, shanghai 200000 CN.
Importato in AUS: SIHAO PTY LTD. 1 ROKEVA STREETEASTWOOD NSW 2122 Australia
Importato negli Stati Uniti: Sanven Technology Ltd. Suite 250, 9166 Anaheim Place, Rancho Cucamonga, CA 91730

EC	REP

E-CrossStu GmbH
Mainzer Landstr.69, 60329 Frankfurt am Main.

UK	REP

YH CONSULTING LIMITED.
C/O YH Consulting Limited Office 147, Centurion House,
London Road, Staines-upon-Thames, Surrey, TW18 4AX

VEVOR®

TOUGH TOOLS, HALF PRICE

Tecnico Supporto e certificato di garanzia elettronica

www.vevor.com/support

VEVOR®

TOUGH TOOLS, HALF PRICE

Techniczny Certyfikat wsparcia i e-gwarancji www.vevor.com/support

DRAPAKI DLA KOTÓW TYPU SŁUPKOWEGO

INSTRUKCJA obsługi

We continue to be committed to provide you tools with competitive price.
"Save Half", "Half Price" or any other similar expressions used by us only represents an estimate of savings you might benefit from buying certain tools with us compared to the major top brands and does not necessarily mean to cover all categories of tools offered by us. You are kindly reminded to verify carefully when you are placing an order with us if you are actually saving half in comparison with the top major brands.

VEVOR®

TOUGH TOOLS, HALF PRICE

PILLAR TYPE CAT TREES

MODEL: CAT790

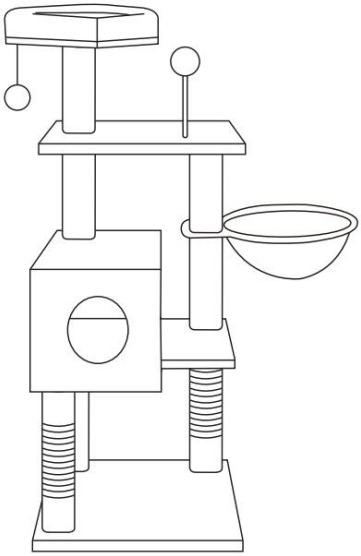

NEED HELP? CONTACT US!

Have product questions? Need technical support? Please feel free to contact us:

Technical Support and E-Warranty Certificate
www.vevor.com/support

This is the original instruction, please read all manual instructions carefully before operating. VEVOR reserves a clear interpretation of our user manual. The appearance of the product shall be subject to the product you received. Please forgive us that we won't inform you again if there are any technology or software updates on our product.

OSTRZEŻENIE:

Przeczytaj uważnie niniejszą instrukcję przed użyciem tego produktu. Niezastosowanie się do tego może spowodować poważne obrażenia.

Środki ostrożności podczas montażu

57. Montaż powinien odbywać się wyłącznie zgodnie z niniejszą instrukcją. Nieprawidłowy montaż może powodować zagrożenia.
58. Podczas montażu należy nosić okulary ochronne i wytrzymałe rękawice robocze zatwierdzone przez ANSI.
59. Utrzymuj miejsce zbiórki w czystości i dobrze oświetlone.
60. Podczas montażu trzymaj osoby postronne z dala od obszaru.
61. Nie należy montować, gdy jest się zmęczonym lub pod wpływem alkoholu, narkotyków lub leków.
62. Możliwości produktu dotyczą wyłącznie produktów prawidłowo i całkowicie zmontowanych.
63. Zmontuj na płaskiej, równej, twardej i gładkiej powierzchni, która może bezpiecznie utrzymać drapaki dla kotów typu słupkowego.
64. Dodatkowe informacje dotyczące części wymienionych na kolejnych stronach można znaleźć w schemacie montażu w niniejszej instrukcji. Rozpakuj i oddziel wszystkie części w czystym miejscu pracy.

Stosuj środki ostrożności

36. Ten produkt nie jest zabawką. Nie pozwalaj dzieciom bawić się tym przedmiotem lub w jego pobliżu.
37. Nie przekraczaj udźwigu.
38. Używaj wyłącznie na płaskiej, równej, twardej i gładkiej powierzchni, która może bezpiecznie utrzymać w pełni obciążone drapaki typu słupkowego.
39. Używaj wyłącznie zgodnie z przeznaczeniem.
40. Sprawdź przed każdym użyciem; nie używać, jeśli części są luźne lub uszkodzone.

ZACHOWAJ TE INSTRUKCJE

PARTS LIST

1		1pc		10		1pc	23cm
2		1pc		11		1pc	22.5cm
3		1pc		12		4pcs	22cm
4		1pc		13		1pc	
5		1pc		A		15pcs	M8*35mm
6		1pc		B		3pcs	M8*80mm
7		2pcs	35cm	C		1pc	
8		1pc	35cm	D		1pc	
9		2pcs	22.5cm				

ASSEMBLY STEP

Krok 1: Zainstaluj 12 w czterech rogach Cat House 2, aby uzyskać wsparcie.

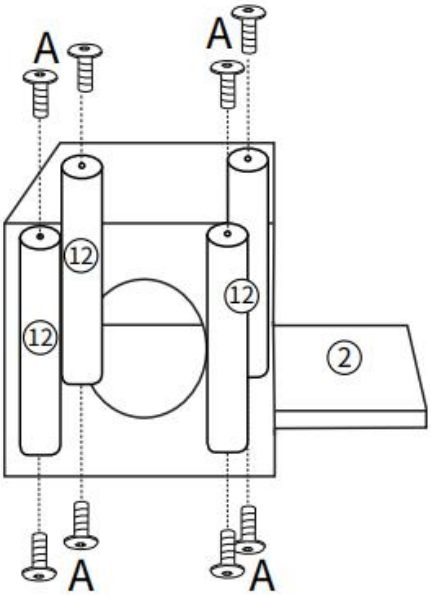

Krok 2: Zainstaluj 7 i 8 do 1, aby uzyskać obsługę.

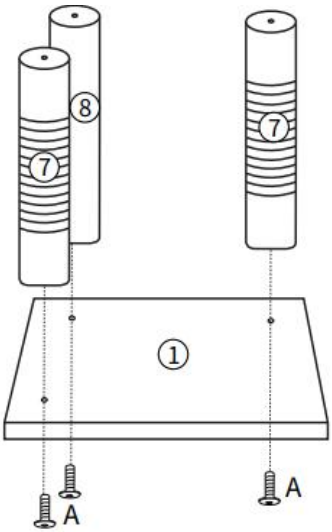

Krok 3: Zainstaluj całość ukończoną w kroku 1 do całości ukończonej w kroku 2

jako

Poniżej.

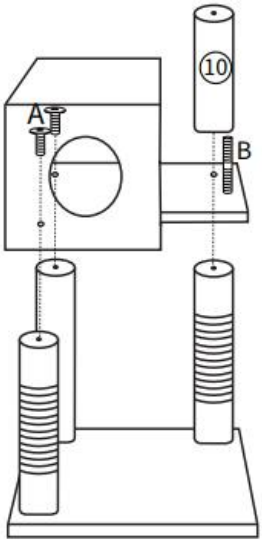

Krok 4: Zainstaluj wersję 4,9 jak pokazano poniżej.

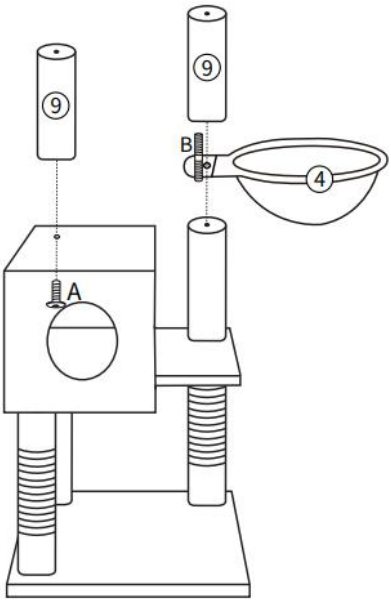

Krok 5: Zainstaluj 3,6,11,5,13 na górze.

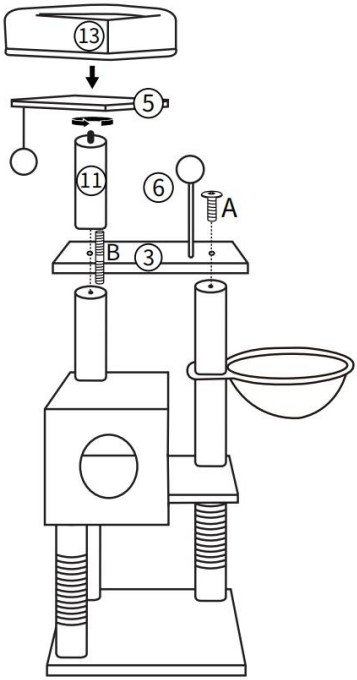

Krok 6: Na koniec przymocuj cały drapak do ściany.

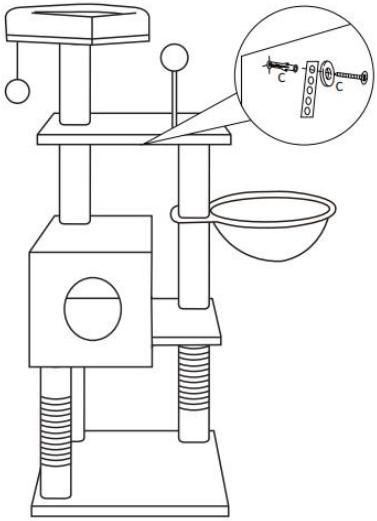

PRODUCT PARAMETER

Model	**KAT790**
Kolor	Jasnoszary lub Głęboki Szary
Typ	5 pięter z 1 domem dla kotów
Materiał	Płyta wiórowa, kolumna z rurki papierowej, plusz, sizal

Producent : Shanghaimuxinmuyeyouxiangongsi
Adres: Shuangchenglu 803nong11hao1602A-1609shi, baoshanqu, szanghaj 200000 CN.
Import do AUS: SIHAO PTY LTD. 1 ROKEVA STREETEASTWOOD NSW 2122 Australia
Import do USA: Sanven Technology Ltd. Suite 250, 9166 Anaheim Place, Rancho Cucamonga, CA 91730

EC	REP

E-CrossStu GmbH
Mainzer Landstr.69, 60329 Frankfurt am Main.

UK	REP

YH CONSULTING LIMITED.
C/O YH Consulting Limited Office 147, Centurion House,
London Road, Staines-upon-Thames, Surrey, TW18 4AX

VEVOR®

TOUGH TOOLS, HALF PRICE

Techniczny Certyfikat wsparcia i e-gwarancji

www.vevor.com/support