WAT Motor
Sanayi ve Ticaret A.Ş.

Three Phase Squirrel Cage Induction Motor

Motor Type: Q3N100S4C40

Electrical Data

RATED VALUES							STARTING VALUES				BREAKDOWN	EFFICIENCY			EFFICIENCY CLASS
VOLTAGE	POWER		SPEED	CURRENT	TORQUE	Cos Φ	CURRENT I_A / I_N		TORQUE M_A / M_N		TORQUE Mk/ Mn	%			IEC 60034-30-1
V	kW	Hz	rpm	A	Nm	4/4	Y	D	Y	D	Nm	4/4	3/4	2/4	IE
230/400	2,2	50	1443	8,3/4,8	14,60	0,78	8,0	-	3,2	-	3,9	IE3-86,7%	85,8%	84,1%	IE3

Mechanical Data

Bearing DE	6206-ZZ	*Color*	RAL 7031
Bearing NDE	6206-ZZ	*Motor protection*	PTC
Lubricants	Shell Gadus S2 V100Q 2	*Method of cooling*	IC 411
Condensation drain hole	No	*Terminal box position*	Top
External earthing terminal	Yes	*Material of terminal box*	Aluminium
Vibration class	A	*Terminal plate thread*	M4
Insulation class	F	*Cable gland*	1xM25
Duty type	S1	*Clamping range*	13-18 mm
Direction of rotation	Clockwise	*Mounting type*	IM 1001 (B3)
Housing material	Aluminium		
Type of balancing	Half Key		

Enviromental Data

Ambitient temperature	-20 / + 40 °C
Altitude above sea level	1000 m

Others

Type of protection		IP 56
Sound pressure level	dBA	48
Moment of inertia (kg.m2)		0,0064849
Standard		IEC 60034-1
Weight (kg)		20,1

Dimensions

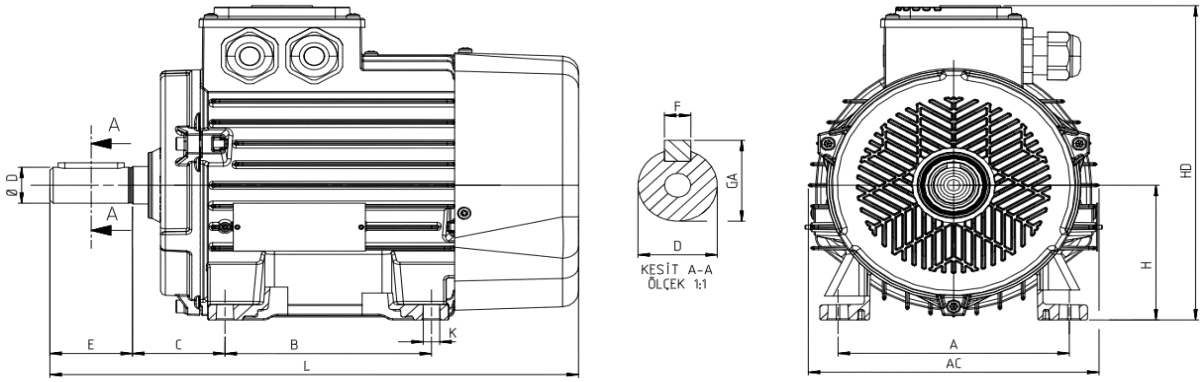

Main Dimensions		Foot Mounted Motors						Shaft				Flange Mounted Motors			
AC	L	B	A	H	HD	K	C	D	E	GA	F	P	N	M	R
196	340	140	160	100	230,5	12	63	28	60	31	8	-	-	-	-

Sensitivity: Confidential