Electric bicycle instruction manual

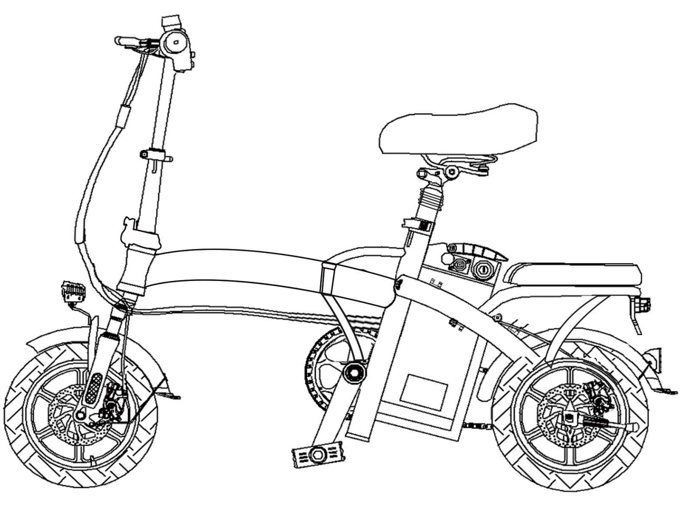

Package set: electric bike, removable battery, power supply, keys, user manual

* Please note that this is a general manual. So, the frame style and accessories of the electric bicycle (e-Bike) that you have may differ from the picture shown in this manual.

Congratulations on your purchase of an electric bike!

Thank you for purchasing your new electric bicycle, and thank you for taking the time to read the owner's manual. We hope you find the information provided in this manual useful. We appreciate your attention and sincerely hope that you will enjoy our product and share your electric bicycle experience with your friends, family and loved ones.

1. Read the operating instructions carefully before first use. This will help you to familiarize yourself with your electric bicycle more quickly and will help you to avoid incorrect operation resulting in damage or accidents. Follow the safety instructions.
2. Knowing the basic warnings and recommendations described in this manual will help you operate your electric bicycle more confidently and safely.
3. If you have any questions regarding the operation of the device, please contact your supplier.

Recommendations

1. The electric bicycle is delivered folded. Therefore, it is necessary to set up and adjust its components and assemblies and check that the bolts are well tightened before using it for the first time.
2. Children under the age of J4 years must only ride an electric bicycle under adult supervision.
3. It is forbidden for persons with impaired mental and coordination skills to operate an electric bicycle.
4. The electric bicycle must be fully charged before first use.
5. Use a helmet, knee and elbow protection when riding.

All right, listen up! Improper use of the device and/or neglect of this user manual may result in serious bodily harm. The supplier shall not be liable for any damage caused by the improper operation of the device.

1. Product Overview

1.1. General information

The original electric bicycle is an intuitive, cutting-edge technological solution. We utilize the latest technology and manufacturing processes, and each electric bicycle undergoes strict quality control.

1.2. What you need to know

Before using the electric bicycle for the first time, please read the operating instructions carefully to ensure your own safety and the safety of others.

Warning: neglect of this user manual and failure to comply with safety measures may result in damage to the electric bike, other property, serious bodily harm.

1.3. Parts and components of the device

1. Smartphone holder with USB charger
2. Handbrake levers (front and rear)
3. Steering wheel locking eccentric
4. Steering wheel folding mechanism
5. LED headlight
6. Front wheel with disk brake
7. On-board computer display
8. Control unit (headlight, horn, gearshift)
9. Gas knob
10. Carrying Grip
11. folding saddle with height adjustment
12. Rear seat
13. Rear position lamp / brake light
14. Reflector
15. Rear motor-wheel with disk brake
16. Front fork with shock absorber
17. Pedals (folding)
18. Removable battery
19. Folding footrest

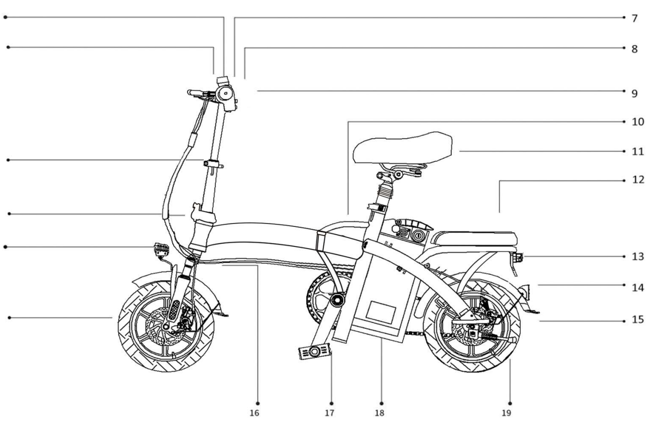

2. Product Description

2.1. Assembly and adjustment

1. Raise the steering rack.

2. Close the steering column clamp and turn the circular catch.

3. Unfold the frame and lock the lock in the center of the frame.
To unlock the lock:
- release the locking latch,
- unfold the fixer-upper to yourself;
- pull the axle retainer upwards.

4. Lower the footrest.

5. Adjust the height of the steering rack with the clamp.

6. Pressing up can fold the cushion and simultaneously remove the battery

7. Adjust the height of the saddle with the clamp.
When assembling the bike for the first time, move the saddle from the transport position to the working position.
t is achieved with the foot slightly bent at the knee at the lowest pedal position.

8. Pedal Installation:
- Note the pedal markings.
- [L] - left pedal, [R] - right pedal.
- Attach pedal L on the left side.
- Attach the R pedal to the right.
- Secure the pedals by fully tightening the mounting bolts.

Note: to better transport the pedals can be folded, gently pressing them towards the frame. To decompress the pedal, just pull the pedal up until the click.
Careful: thepedal ahs left threads, and the pedal have right threads. Damage caused by incorrect installation is not covered by the warranty.

2.2. Folding

1. Fold up the footrest.

2. Open the seat clamp to lower the saddle height to a minimum.

3. Open the frame clamp and turn it 90° away from the frame. Lift the lever and fold the electric bicycle in **half.**

4. Turn the circular catch and open the steering rack clamp to fold the steering rack.

2.3. How to disconnect the battery

Disconnect the power cable of the electric bicycle from the battery. Use the key to unlock the battery lock on the frame of the e-bike. Turn the key to the unlock position and remove the battery by pulling it upwards. Installation is carried out in reverse order.

2.4. Switching the speed mode

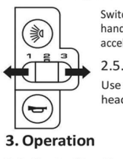

Switch the PAS level from low to high using the switch on the left handlebar of the bike. Each PAS level gives a different level of acceleration and maximum speed (low, medium, high).

2.5. Headlights and horn

Use the buttons on the left handlebar of the bike to turn the headlight on/off and the horn.

2.6. Battery charge indication

The power indicator (4 levels) shows the remaining battery level.

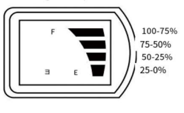

3. Operation

3.1. Controlling the electric bicycle

1. Make sure the electric bicycle is fully assembled and the power cable is connected to the battery.
Insert the key into the battery lock and turn the battery on.
2. Turn your bicycle on with the "On" button located on the handlebar below the on-board computer screen. After switching on, the on-board computer will display the battery level. Use the PAS level switch to select the desired speed mode. Use the LIGHT button to turn the headlight on or off.
3. The electric bicycle is equipped with a gas pedal handle. Turn the handle towards yourself to start moving. The greater the angle of the handle, the higher the speed.
4. Use the brake handles to stop. Pressing the handles disengages the electric motor. The bicycle is equipped with mechanical disc brakes.

And before you use, make sure that your device is working properly. Make sure all fasteners are present and twisted. Check the working pressure in the tyres. It shall be between 2.5 and 3.0 times the atmosphere. Check the brakes. Ensure the integrity of visible cable and wiring components. Do not use both brake and accelerator. And always turn off the electric bike if you do not ride it, for example, when crossing public roads at a pedestrian crossing. Accelerator only works on electric bike.
Do not push the brake handle hard and hard without having to, as this can lead to rollover.

3.2. Lighting

- Check the operation of the lights every time you travel. Make sure that the beam of light is not directed too high, as you may blind other road users.
- Headlights should be used in poor visibility, dusk and darkness. Make sure that the battery is charged. Always turn on the lights in poor visibility conditions! Keep in mind that not only you will see the road better when the lights are on, but also other road users will be able to see you better.

3.3. Brake system

Safe handling of the brakes is important for your safety when riding your bicycle. Therefore familiarize yourself with the brakes on your electric bicycle before your first ride.

The efficiency of the braking system depends on many factors. It can be significantly reduced, e.g. due to road surface properties (gravel tracks, soil, etc.), additional payload, downhill gradients or weather. Wet road surfaces can lead to an increase in braking distance of up to 60% compared to dry road surfaces. Take this factor into account when driving. It is recommended to drive slower and with extreme caution.

- Check the brakes before each trip. Improperly adjusted brakes may result in reduced braking force or even complete brake failure.

Avoid sudden braking to avoid slipping or locking the wheels.
Maintenance and repair of brakes, should only be carried out by qualified personnel.

- Replace brake components only with original parts, as this is the only way to ensure proper operation.

3.4. User weight limit

Maximum weight: 120 kg.

All right, listen up!
Weight limit is set for your safety. Please do not exceed the permissible weight.

3.5. Operating conditions

Below are some of the main factors that will affect the range of your electric bike.

Terrain: Smooth, level surfaces will increase driving distance, while driving uphill and over uneven terrain may significantly reduce the distance.

Weight: The weight of the user can affect the distance, the lower the user's weight, the farther they can travel on a single battery charge.

Ambient Temperature: Use and store your electric bicycle at the recommended temperatures to maximize the life of the unit and battery life.

Maintenance: Moderate battery charging and maintenance will extend the life of the device. Avoid overcharging the battery.

Speed and driving style: Start as you would on a normal bicycle. Use the gas pedal only after you start riding. Drive at a moderate speed. Frequent and sudden acceleration, irregular driving and driving at high speeds for long periods of time will reduce the power reserve of your electric bicycle.

4. Charging an electric bicycle

Step 1: Make sure the charging port is clean and dry under the plug. Make sure there is no dust, debris or dirt inside the port.

Step 2: Plug the charger into a -220V outlet. Make sure the indicator light on the charger is green.

Step 3: Plug the cable into the charging port on your electric bike. The indicator light on the charger should change to red, this means your electric bike is charging. When the red light on the charger turns green, your e-bike is fully charged. A full charge usually occurs within 5b hours.

Step 4: Unplug the charger from the electric bike and from the electrical outlet.

⚠ ·Charge the battery completely after each trip, if possible, to avoid loss of capacity. You can charge the battery separately from the bike or in
·Do not start the electric motor when charging the battery.
·Make sure that the charger is disconnected from the battery of the electric bike before you start your trip. Follow the instructions on the label of the charger.
·The charger shall only be used for the rechargeable battery of an electric bike. Do not use the charger to charge batteries and other batteries from other manufacturers.
·The charger is designed for indoor use only and must be connected only to the source
·Never touch the charger and fork with your wet hands!
·Make sure that there are no conductive (e.g. metal) items near the charging plug and battery contacts.
·Do not use the charger in conditions of high humidity and dust, under the influence of direct sunlight and high temperatures, as well as during a storm.
·Make sure that the room is sufficiently ventilated when charging.
·Optimum charging temperature +5 ~ +30°C. Extreme cold or heat will not allow the battery to be fully charged.
·If the charging time clearly exceeds the time specified in the instruction, stop charging and contact support.
·Do not charge the battery too long.
·Do fter completing the charging, disconnect the charger from the power source.
·Never open or repair the charger. Replace it if it's defective. Contact customer support.
·The charger is not intended for use by persons with physical, sensory or mental disabilities or lack of experience and/or knowledge, unless such persons are controlled by the person responsible for their safety. The charger should normally be away from children.
·If the indicator blinks red, it means that the battery has reached a deep discharge. Most of the time, such a battery will not charge a state battery. Contact the official sc.

5. Battery information

This section provides basic information about your battery and charger. Please read this section carefully to ensure user safety, extend battery life, and improve battery performance.

Battery charge

When the battery level reaches a low level, stop using the electric bicycle and charge the battery using the charger provided.

Safety precautions when using the battery

- Do not store the battery at low temperatures (balcony, garage, etc.) for long periods of time.
- Seek medical attention immediately if you have been exposed to any substance from the battery.

Do not attempt to modify or replace the battery. Do not use the bicycle if the battery starts to smell, overheats, or leaks.

If the integrity of the battery has been compromised, do not touch or charge the battery. Do not touch or inhale vapors leaking from the battery. Do not allow children or animals to touch the battery.
Contact the service center.

- The battery contains hazardous substances, do not open the battery, do not insert foreign objects into the battery. Please only use the charger included in the package.
- If your electric bicycle stops charging due to improper use or improper storage, do not attempt to restore battery performance yourself. Contact a service center.
- Please comply with all local and federal laws regarding the handling and disposal of lithium-ion batteries.

6. Maintenance and storage

Your electric bicycle needs preventive inspection and maintenance. This section describes the steps for maintenance and operation. Before performing the following operations, make sure that the charger is turned off.

6.1 General Provisions

- If you are not going to use your electric bike for more than 2 months, be sure to store it in a dry place to protect the electronic components.

We recommend that you fully charge the battery before storing your electric bicycle.

- The battery should be stored in a dry and cool room at plus temperature. The optimum temperature for operating, charging and storing the electric bicycle is +5~ +30°C.
- Turn off the power and disconnect the battery for repair, service, and maintenance.

All screw connections on the electric bicycle must be checked regularly (at least every 3 months) and, if loose, tightened to the required condition. This is the only way to ensure that the electric bicycle always meets the technical safety requirements and operates correctly. This does not include adjustment screws in the gearshift and brake components.

- Recharge the battery at least once a month during the entire storage period.
- Only carry out repairs, maintenance and adjustments if you have sufficient specialist knowledge and all the necessary tools. This applies especially to work on the brake system. Incorrect or insufficient repair work can lead to damage to the electric bicycle, malfunctions and accidents.
- An electric bicycle requires regular inspection and maintenance. Only this can ensure that the technical safety requirements are always met and that it works properly.

An electric bicycle or individual parts of an electric bicycle are subject to increased wear and tear due to use, accidents or improper handling. Any cracks, scratches and discoloration may indicate that the relevant part may fail unexpectedly. This applies in particular to bent or damaged safety-related parts such as frame, fork, handlebars, handlebar nose, saddle, seatpost, all brake components (in particular brake lever and brake pads), lights, pedals, wheels, tires and tubes. Never repair such defective parts. If problems are detected, replace them in good time with new original spare parts.

- Regularly check your electric bicycle's frame, mechanisms and tires for damage or excessive wear.

- Only use original spare parts, as these have been specially selected for this model of e-bike. This applies in particular to safety-related parts such as frame, fork, handlebar, handlebar stem, saddle, seatpost, all brake components (in particular brake lever and brake pads), lights, pedals, wheels, tires and tubes. If you use any third-party replacement components, the safe use of the electric bicycle may be seriously affected.
- To prevent dust from getting inside the electric bicycle, store the electric bicycle in its original packaging or wrap it in a thick cloth, etc. before storing.
- Store your electric bicycle in a dry, enclosed area at an acceptable temperature.

6.2 Independent maintenance of the electric bicycle

Regular maintenance is extremely important to maintain the performance, reliability and safety of the device. Depending on the intensity and conditions of use, regular maintenance is necessary (but at least once a month):

- Clean and lubricate the chain.
- Check the air pressure in the tires.
- Check (and retighten) all threaded connections.

Maintenance intervals for the mechanical part of the electric bicycle

The frequency of maintenance of the mechanical part of the electric bicycle depends on the riding style as well as the operating and storage conditions. The wear and tear of the main components can vary. Below is a table of general recommendations for maintenance periods for the mechanical part of an electric bicycle.

Detail	Before each trip.	Every 100-150 kilometers or after every trip	**Every 500-1000 km**	**Every 4-5 thousand kilometers** or once a year
Brakes	performance check	cleaning and greasing the brake handles		
Tires	pressure test		external inspection	
Chain		cleaning, lubrication	cleaning, lubrication, extension check	
Fork		cleaning, burying forked oil under the oil seal	cleaning parsed	
Cassette system		**cleaning**	cleaning and lubrication	
Brake pads		wear test		
Rear rollers switch		cleaning	cleaning and lubrication	
Frame, rims			external inspection	
Steering column, pedals, bushings			checking for play, cleaning, lubrication	
Cords and shirts			serviceability check, cleaning, lubrication	
Switches			cleaning, lubrication	
Brake handles		brake handle cleaning/lubrication		
Carriage (cartridge)				verification no backlash

Chain maintenance

The chain is the most heavily loaded part of the bicycle and should be kept clean and lubricated. It is recommended to lubricate the chain after approximately 100-300 km, depending on the operating conditions, using the following sequence of operations:

Clean a dirty chain with a dry rag.
Wash off the dirt with a brush and a special cleaner or kerosene, diesel oil or gasoline.

- Wipe the chain with a dry clean rag and dry for 5 minutes.
- Apply spray lubricant or liquid motor oil to the entire surface of the chain.
- After 10-15 minutes, remove excess grease.

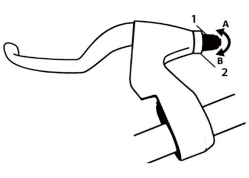

Adjusting the brake cable tension The brake cable tension adjustment screw 1 and lock nut 2 are used for operational adjustment of the brake cable tension. Each time you adjust the tension, remember to lock the screw with the lock **nut.**

Adjustment of mechanical disk brakes

Mechanical disc brakes have one stationary pad and one movable pad driven by a brake cable from the brake lever. Both shoes and the body of the mechanical disk brake are subject to position adjustment. Start by adjusting the latter.

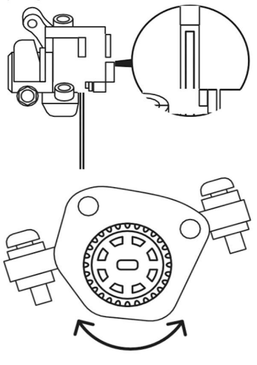

- Loosen the mounting bolts securing the brake housing to the fork (front brake) and frame (rear brake).
- Align the brake housing so that the brake disc runs strictly in the center of the slot in the brake housing.
- Tighten the mounting bolts without tilting the brake housing.
- Use the adjustment on the inside of the brake housing to bring the stationary brake shoe to the minimum distance to the brake disk, but do not allow it to roll on the disk.
- Using the adjustment on the outside of the brake housing, similarly align the movable brake shoe so that the gap is no more than J mm.
- Check the brake function. The brake pads must be fully pressed together (through the brake disk) before the brake lever hits the steering wheel handle. If necessary, adjust the idle speed of the lever.

A properly adjusted mechanical disc brake must stop the electric bicycle with confidence when the brake lever is applied and at the same time not prevent the brake disk from rotating when the brake lever is released. It is permissible for the pads to lightly touch the disk, as long as this does not cause perceptible braking of the wheel.

The brakes may squeak until the pads are worn or after riding the bike on wet or muddy roads. This is normal and may increase the braking distance of the bike slightly. The squeaking will stop with prolonged riding.

7. Technical specifications

- Tires: 14", inflatable
- Motor: brushless
- Battery: Lithium ion, 48 V
- Power supply: - 100-240 V / 50-60 Hz
- Charger output voltage: 54.6 V
- Load: up to 120 kg
- Braking system: front and rear disc brakes
- Shock absorbers: front, center and rear

⚠ The manufacturer reserves the right to change the design and characteristics of the device without prior notice.

⚠ Disclaimer: comply with local and federal travel laws and regulations. The manufacturer is not responsible for the consequences of exceeding the speed of the bicycle driver.

8. All-weather protection

Each electric bike is certified to withstand any external influences: concussion, dust, dirt, humidity, corrosion. The electrical components are additionally shielded from external radiations. However, if the product is used improperly, you risk causing significant damage to the product and losing the warranty.

Recommendations:

- Avoid immersion in water and aggressive environments. The electric bicycle is suitable for riding on pavement in drizzling rain, but must not be used in heavy rain. Do not ride in puddles deeper than 2 cm.
- Do not ride in sub-zero temperatures, as this leads to rapid degradation of the Li-ion battery. Do not ride in wet snow.
- Avoid storing your electric bicycle in cold and damp rooms (loggia, garage) during the winter. The optimum temperature for operating, charging and storing the electric bicycle is +5~ +30°C.
- Always cover the charging connector with the protective cap and keep it free of dirt or water.
- If the electric bicycle has been exposed to water or frost, take it into a warm room and leave it to warm up/dry for at least 24 hours, DO NOT CHARGE IT! Charge the battery of an electric bicycle only when it is dry and free from moisture and condensation.
- Do not leave the electric bicycle near (within 1 meter) sources of intense heat (radiators, radiators, heaters).
- To maintain efficiency, regularly recharge the battery to 50% or for 1 hour at intervals not exceeding 30 days.
- Do not charge the electric bicycle for more than 5 to 6 hours. Do not leave it unattended for long periods of time while charging.
- Avoid all shocks and mechanical damage. If your electric bicycle has been subjected to mechanical shock or moisture, do not charge it and have it checked by a service center.

9. SAFETY MEASURES - Must Read

FAILURE TO OBSERVE THE FOLLOWING SAFETY PRECAUTIONS MAY RESULT IN DAMAGE TO THE ELECTRIC BICYCLE AND OTHER PROPERTY, INVALIDATION OF THE MANUFACTURER'S WARRANTY, AND SERIOUS TPABMAM.

9.1 General safety instructions

- We do not recommend the use of an electric bicycle for persons under 14 years of age.
- The electric bicycle is not designed for extreme or off-road driving.
- Read the operating instructions carefully.
- Use all necessary protective equipment.
- Wear brightly colored reflective clothing so other road users can see you better and earlier.
- The electric bicycle has swiveling and moving parts. Incorrect clothing, improper handling or lack of attention leads to a risk of injury.
Wear tight fitting pants. If necessary, use bicycle pant clips.
Clothing that is too loose and hanging down can get caught in the wheels or other rotating mechanisms of the bicycle.
- Wear non-slip shoes with stiff soles that provide stability.
- First familiarize yourself with the operation and behavior of the electric bicycle away from traffic. In particular, practice starting, braking and turning.
- Make sure that the brakes on your electric bicycle work effectively and always keep your electric bicycle in good technical condition. When reducing speed or stopping, control the braking force. Do not apply excessive force to the front brake to avoid tipping over.To stop, apply both brakes with the same intensity. Brake only with the rear brake to smoothly reduce speed.
- Brakes lose some of their effectiveness in wet weather, so always keep this in mind when driving. Also remember that wet roads are more slippery than dry roads, so when driving on wet or damp roads, control your speed, avoid sudden maneuvers and sudden braking. Take special care when passing railroad or streetcar tracks, driving on metal surfaces and when passing road markings, which are especially slippery in wet weather.
- When accelerating or braking, the center of gravity must be controlled (prevent weight transfer forward or to the arms), as this can lead to a fall.
- An electric bicycle has a longer braking distance than a conventional bicycle due to its greater mass.
- The engine will stop automatically as soon as you depress one of the brake levers. This prevents unwanted acceleration in dangerous situations.
- Do not use the electric bicycle in an unsafe place.
- Do not use your electric bicycle while under the influence of drugs and/or alcohol.
- Do not use the electric bicycle when you are anxious or drowsy.
- Be alert at all times to keep yourself safe from dangerous situations.
- Do not skate in skateparks, empty pools or other skateboarding facilities.
- Do not overuse the electric bicycle.Improper use may damage the unit.
- Ride only on dry, level surfaces. Do not ride near puddles, mud, sand, rocks, gravel, debris, or on uneven or rough terrain.
- Do not ride in bad weather: snow, rain, hail, slush, icy roads, extreme heat or temperatures below 0°C.
- Do not ride near swimming pools or bodies of water.
- The use of an electric bicycle is contraindicated for people with impaired coordination of movements and other vestibular problems.
- The use of an electric bicycle is contraindicated for pregnant women.
- Young children and the elderly are not allowed to operate an electric bicycle without proper training and supervision.
- Do not exceed the maximum or minimum weight limits.
- Do not use a trailer or similar equipment to transport the load.
- Do not carry passengers on the frame.
- Do not drive at high speed (>10 km/h) on curbs and other uneven terrain. Failure to do so may result in premature wear and breakage of the wheel rims, as well as damage and tearing of tubes and tires.
- Observe the operating instructions and hand them over when selling or donating the electric bicycle.

9.2 **Road safety** measures

- First familiarize yourself with the operation and behavior of the electric bicycle away from traffic. In particular, practice starting, braking and turning. Start at the lowest speed possible.
- Do not make sharp turns at high speed. Before making a turn, assess the road conditions and make sure that the maneuver is safe.
- Always turn on your lights when visibility is poor! This not only allows you to see the road better, but also allows other road users to see you better.
- Never listen to a player or radio through headphones while driving. This distracts you from what is happening on the road, which can be very dangerous.
- Always use caution when riding an electric bicycle, and be aware of road conditions, traffic and the location of objects.
- Do not ride your electric bicycle in crowded areas.
- Operate your electric bicycle with the safety of the people and property around you in mind.
- Do not ride the e-bike while talking, texting, or looking at your phone.
- Do not ride an electric bicycle where it is prohibited.
- Do not ride your electric bicycle near a moving vehicle.
- Do not ride your electric bicycle down steep slopes.
- Do not hold anything in your hands while riding an electric bicycle.

9.3 Electrical safety measures

- The electric bicycle is not suitable for long uphill rides, the motor may overheat. If you cannot reach a high speed, e.g. in a busy area with a large number of pedestrians, turn off the electric drive system.
- When the battery is completely discharged, the engine may start to run intermittently. In this case, disconnect the drive system to prevent damage to it.
- Do not attempt to open the battery case or repair the electric bicycle yourself, as this will void the manufacturer's warranty and may cause the unit to malfunction, which could result in serious injury.
- The battery of the electric bicycle is absolutely safe for the environment during use, however, please do not dispose of used batteries in the trash for safety reasons, they need to be recycled.
- Use only the supplied battery for this electric bicycle.
- Do not use a battery with a damaged case. It must be replaced.
- Keep the battery away from fire and high temperatures.
- Do not allow water to enter the battery.
- Never subject the battery to strong shocks.
- Remove the battery when transporting the electric bicycle.
- Ensure safe storage of the electric bicycle and battery during transportation.
- Do not ride in unsafe areas where flammable gas, vapor, liquid, dust may be present, which can cause fire and explosion.

The device is removed from warranty service in case of:

Mechanical damage to the case, power supply unit;

- Inconsistency of the model, serial number specified in the warranty card;

Changes to the device configuration or use of the product for commercial purposes;

If the device shows signs of tampering, water ingress into the power supply, or if unauthorized service centers have attempted to repair the device;

- If unauthorized changes to the design or circuitry of the product are detected;
- If the device has malfunctioned due to misuse and non-compliance with the use and charging rules.

Claims for the quality of the product will not be accepted in the case of:

- Foreign objects, substances, liquids, insects, etc. entering the product;
- Force majeure circumstances (water disasters, hurricanes, fires, earthquakes);

Non-compliance of power grid parameters with state standards and other such external factors;

Plugging into a single outlet with a powerful power consumer that causes power surges (refrigerators, heaters, vacuum cleaners, etc.) with a power of more than 1000 watts.

The warranty does not apply to:

- Consumables and parts subject to normal wear and tear.
- Lost fasteners.

Batteriesthat have been rendered inoperable by violation of the charging and storage rules described in this manual.

- The wheels and case are also not eligible for warranty repair, as they can only be seriously damaged if used improperly and carelessly by the purchaser.

Loosening of threaded connections, the need for lubrication of moving components and units, as well as the replacement of parts subject to **natural** wear and tear are included in the regular maintenance of the devices and are not a warranty case. The elimination of these faults is carried out on a paid basis. The manufacturer reserves theright to refuse repair in case of non-compliance with the maintenance procedure.

Battery Maintenance:

- The technological feature of the battery requires mandatory recharging (regardless of how often the device is used) at least once a month.

The batteries must be **fully** charged for the first time, which can take up to 6 hours. Prior to this procedure, the device may only be switched on for a short period of time and checked for proper operation.

If the batteries are completely or nearly completely discharged, you should put the device on charge immediately after use.

- For long-term storage (2 weeks to a year or more), it is recommended to charge the device once a month during the entire storage period. This ensures that the battery is not damaged during long-term storage.

Use of the device at low temperatures (below 0°C) is not permitted and may result in battery failure.

The limited warranty is iconBIT's only warranty and only applies to products that are sold as new.