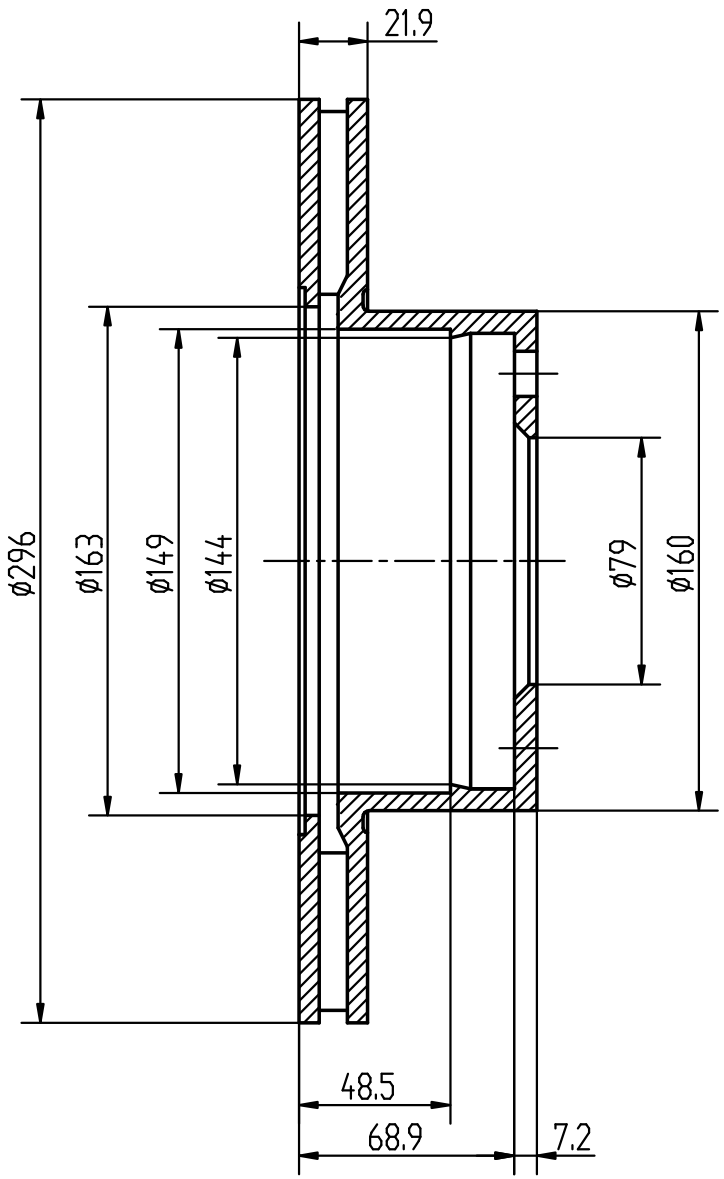

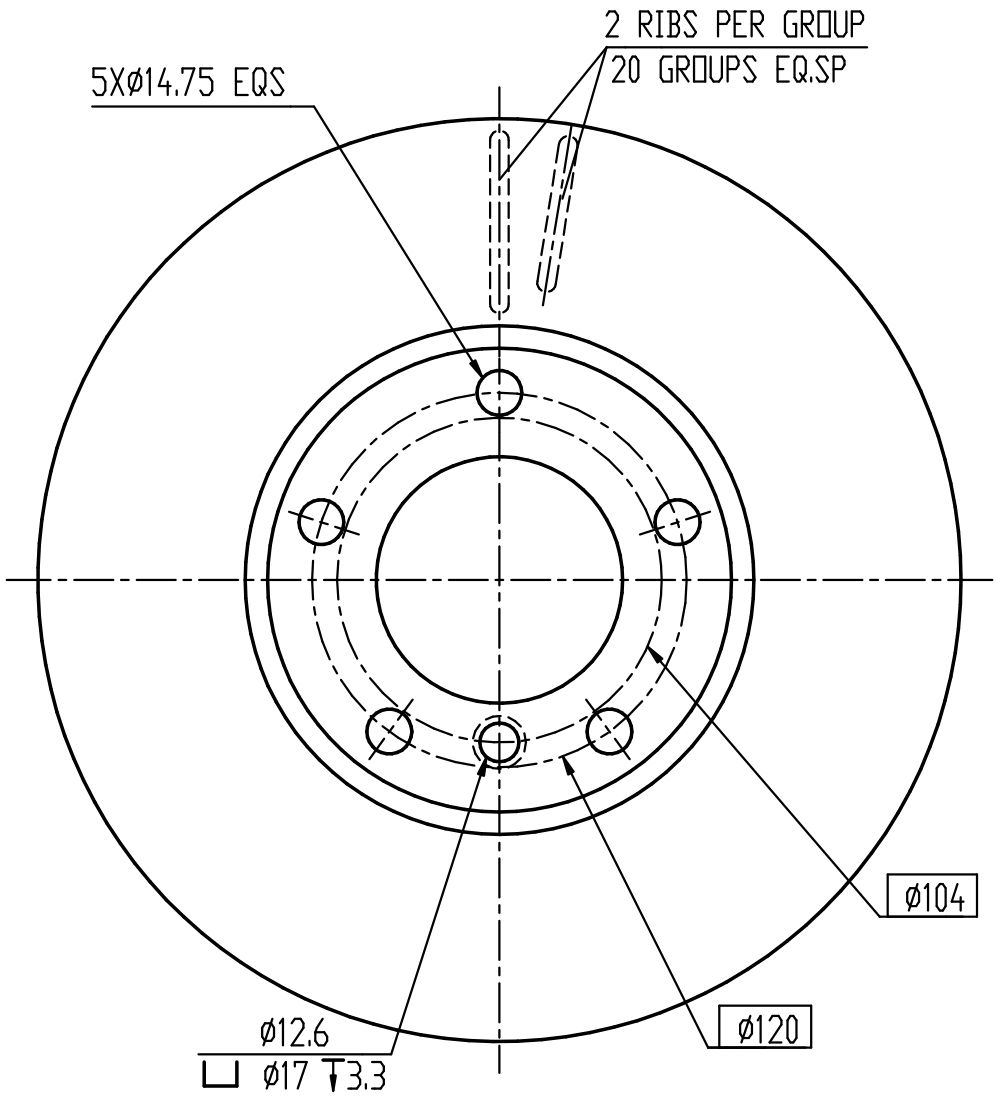

MIN THK 20.4MM

FA-BD-BM12