VEVOR®

TOUGH TOOLS, HALF PRICE

Technical Support and E-Warranty Certificate www.vevor.com/support

TRAILER COUPLER

MODEL: SS-TC-12BS / SS-CK-03

We continue to be committed to provide you tools with competitive price.
"Save Half", "Half Price" or any other similar expressions used by us only represents an estimate of savings you might benefit from buying certain tools with us compared to the major top brands and doses not necessarily mean to cover all categories of tools offered by us. You are kindly reminded to verify carefully when you are placing an order with us if you are actually saving half in comparison with the top major brands.

VEVOR®
TOUGH TOOLS, HALF PRICE

TRAILER COUPLER

MODEL: SS-TC-12BS / SS-CK-03

NEED HELP? CONTACT US!

Have product questions? Need technical support? Please feel free to contact us:

Technical Support and E-Warranty Certificate
www.vevor.com/support

This is the original instruction, please read all manual instructions carefully before operating. VEVOR reserves a clear interpretation of our user manual. The appearance of the product shall be subject to the product you received. Please forgive us that we won't inform you again if there are any technology or software updates on our product.

SAFETY INSTRUCTIONS

⚠WARNING

1. Safety chains must be used.
2. Be sure to take good protection during welding work.
3. Be sure to check that the bolts are tight.
4. Be sure to match the corresponding trailer ball.
5. After towing for 50 miles, check coupler for tightness on ball. Always check tighness before towing. Be sure coupler handle is in locked position.
6. Do not exceed the gross trailer weight capacity.

MODEL AND PARAMETERS

Model	SS-TC-12BS	SS-CK-03
Capacity	15000lbs	15000lbs
Ball Size	2-5/16inch	2-5/16inch
Applicable Channel	3inch	3inch
Color	Black	Black
Remarks	/	With 5-Position Adjustable Channel Bracket

STRUCTURE DIAGRAM

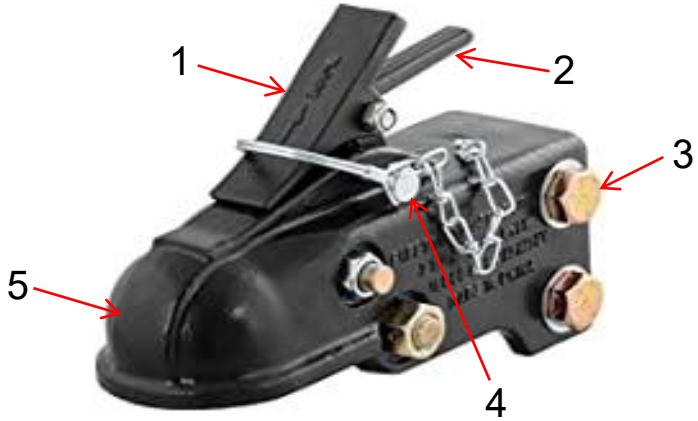

1.Fastener 2.Handle 3.Connecting Bolt 4.Safety Pin 5.Ball Socket

COMPONENTS

No.	Picture	Name	Qty
1		Trailer Coupler	1
2		Bolt	2
3		Lock Nut	2
4		Shim	4
5		Channel Bracket(Only SS-CK-03)	1
6		User Manual	1

OPERATION

A. Channel Bracket ("SS-TC-12BS" does not include the component.)

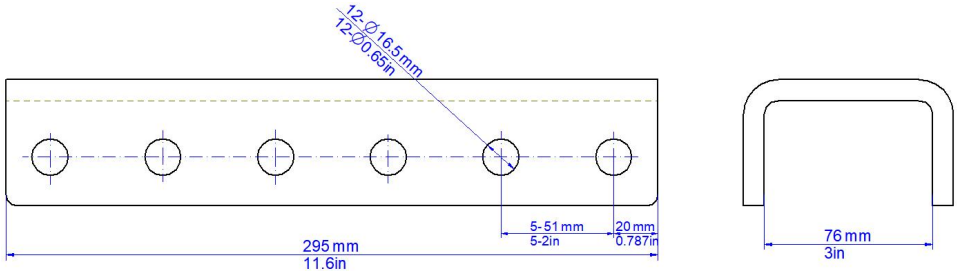

NOTE: The welding must be firm and reliable.

B. Coupler

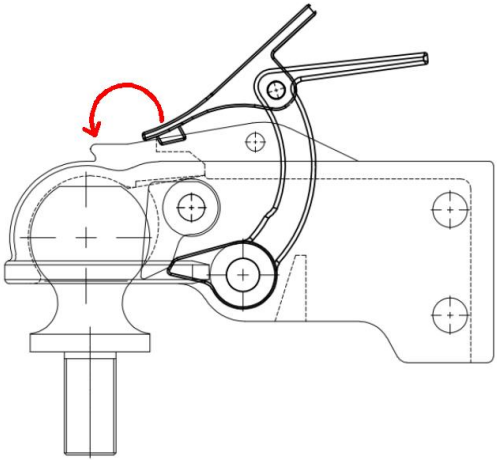

To open, pull up on coupler handle and rotate forward. Place coupler on ball. When ball is completely nested in ball socket, rotate coupler handle backward until handle is in locked position. Plug in the safety latch.
After towing for 50 miles, check coupler for tightness on ball. Always check tighness before towing. Be sure coupler handle is in locked position.

MAINTENANCE

1. Please check that the bolts are tight before each use.
2. Do not overload.
3. Pay attention to rust prevention.

MADE IN CHINA

VEVOR®

TOUGH TOOLS, HALF PRICE

TechnicalSupport and E-Warranty Certificate

www.vevor.com/support

VEVOR®

TOUGH TOOLS, HALF PRICE

Assistance technique et certificat de garantie électronique

www.vevor.com/support

ATTELAGE DE REMORQUE

MODÈLE : SS-TC-12BS / SS-CK-03

We continue to be committed to provide you tools with competitive price.
"Save Half", "Half Price" or any other similar expressions used by us only represents an estimate of savings you might benefit from buying certain tools with us compared to the major top brands and doses not necessarily mean to cover all categories of tools offered by us. You are kindly reminded to verify carefully when you are placing an order with us if you are actually saving half in comparison with the top major brands.

VEVOR®
TOUGH TOOLS, HALF PRICE

TRAILER COUPLER

MODÈLE : SS -TC-12BS / SS-CK-03

NEED HELP? CONTACT US!

Have product questions? Need technical support? Please feel free to contact us:

Technical Support and E-Warranty Certificate
www.vevor.com/support

This is the original instruction, please read all manual instructions carefully before operating. VEVOR reserves a clear interpretation of our user manual. The appearance of the product shall be subject to the product you received. Please forgive us that we won't inform you again if there are any technology or software updates on our product.

SAFETY INSTRUCTIONS

⚠WARNING

7. Des chaînes de sécurité doivent être utilisées.
8. Assurez-vous de prendre une bonne protection lors des travaux de soudage.
9. Assurez-vous de vérifier que les boulons sont bien serrés .
10. Assurez-vous de faire correspondre la boule de remorque correspondante.
11. Après avoir remorqué sur 50 miles, vérifiez que le coupleur est bien serré sur la boule. Vérifiez toujours le serrage avant de remorquer. Assurez-vous que la poignée du coupleur est en position verrouillée.
12. Ne pas dépasser la capacité de poids brut de la remorque.

MODEL AND PARAMETERS

Modèle	SS -TC-12BS	SS-CK-03
Capacité	15 000 livres	15 000 livres
Taille de la balle	2-5/16 pouces	2-5/16 pouces
Diamètre / longueur	3 pouces	3 pouces
Couleur	Noir	Noir
Remarques	/	Avec support de canal réglable à 5 positions

STRUCTURE DIAGRAM

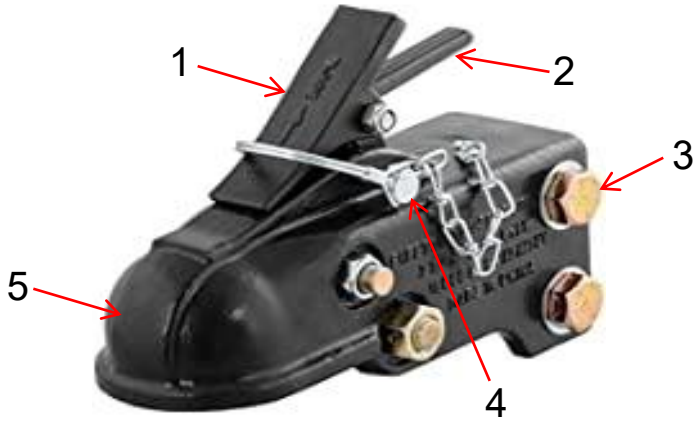

1. Fixation 2. Poignée 3. Boulon de connexion 4. Goupille de sécurité 5. Douille à bille

COMPONENTS

Non.	Image	Nom	Qua
1		Attelage de remorque	1
2		Boulon	2
3		Contre-écrou	2
4		Cale	4
5		Support de canal (uniquement	1
6		Manuel d'utilisation	1

C. Support de canal (« SS-TC-12BS » n'inclut pas le composant.)

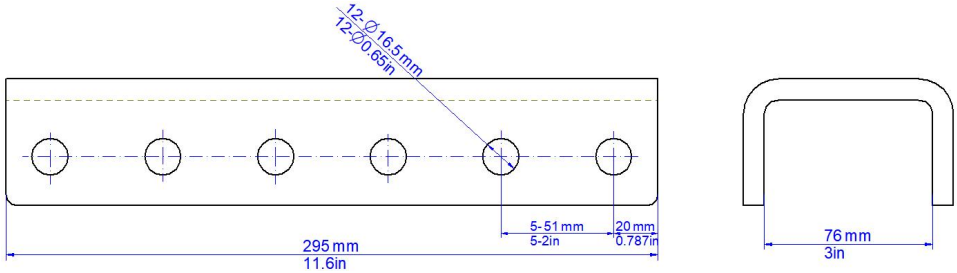

REMARQUE : La soudure doit être ferme et fiable.

D. Coupleur

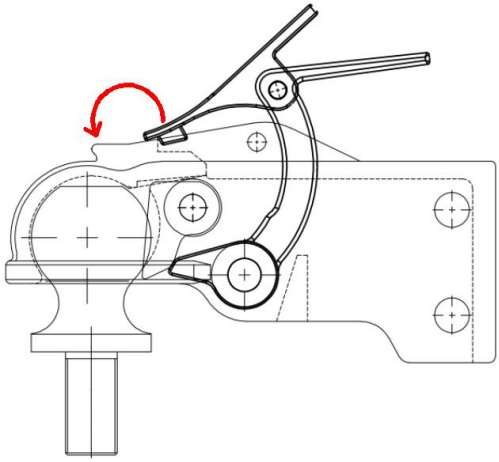

Pour ouvrir, tirez sur la poignée du coupleur et faites-la tourner vers l'avant. Placez le coupleur sur la boule. Lorsque la boule est complètement emboîtée dans la douille à boule, faites tourner la poignée du coupleur vers l'arrière jusqu'à ce que la poignée soit en position verrouillée. Branchez le loquet de sécurité.

Après avoir remorqué sur 50 miles, vérifiez que le coupleur est bien serré sur la boule. Vérifiez toujours le serrage avant de remorquer.

Assurez-vous que la poignée du coupleur est en position verrouillée.

MAINTENANCE

1. Veuillez vérifier que les boulons sont bien serrés avant chaque utilisation.
2. Ne pas surcharger.
3. Faites attention à la prévention de la rouille.

FABRIQUÉ EN CHINE

VEVOR®

TOUGH TOOLS, HALF PRICE

Certificat de support technique et de garantie électronique

www.vevor.com/support

VEVOR®

TOUGH TOOLS, HALF PRICE

Technischer Support und E-Garantie-Zertifikat www.vevor.com/support

ANHÄNGERKUPPLUNG

MODELL: SS-TC-12BS / SS-CK-03

We continue to be committed to provide you tools with competitive price.
"Save Half", "Half Price" or any other similar expressions used by us only represents an estimate of savings you might benefit from buying certain tools with us compared to the major top brands and doses not necessarily mean to cover all categories of tools offered by us. You are kindly reminded to verify carefully when you are placing an order with us if you are actually saving half in comparison with the top major brands.

VEVOR®
TOUGH TOOLS, HALF PRICE

TRAILER COUPLER

MODELL: SS -TC-12BS / SS-CK-03

NEED HELP? CONTACT US!

Have product questions? Need technical support? Please feel free to contact us:

Technical Support and E-Warranty Certificate
www.vevor.com/support

This is the original instruction, please read all manual instructions carefully before operating. VEVOR reserves a clear interpretation of our user manual. The appearance of the product shall be subject to the product you received. Please forgive us that we won't inform you again if there are any technology or software updates on our product.

SAFETY INSTRUCTIONS

⚠WARNING

13. Es müssen Sicherungsketten verwendet werden.
14. Achten Sie bei Schweißarbeiten unbedingt auf guten Schutz.
15. Überprüfen Sie unbedingt, ob die Schrauben fest angezogen sind .
16. Achten Sie auf die passende Anhängerkupplung.
17. Nach 50 Meilen Schleppen prüfen Sie, ob die Kupplung fest auf der Kugel sitzt. Prüfen Sie vor dem Schleppen immer, ob die Kupplung fest sitzt. Stellen Sie sicher, dass der Kupplungsgriff verriegelt ist.
18. Überschreiten Sie nicht das zulässige Gesamtgewicht des Anhängers.

MODEL AND PARAMETERS

Modell	SS -TC-12BS	SS-CK-03
Kapazität	15.000 Pfund	15.000 Pfund
Ballgröße	2-5/16 Zoll	2-5/16 Zoll
Anwendbarer	3 Zoll	3 Zoll
Farbe	Schwarz	Schwarz
Hinweise	/	Mit 5-fach verstellbarer Kanalhalterung

STRUCTURE DIAGRAM

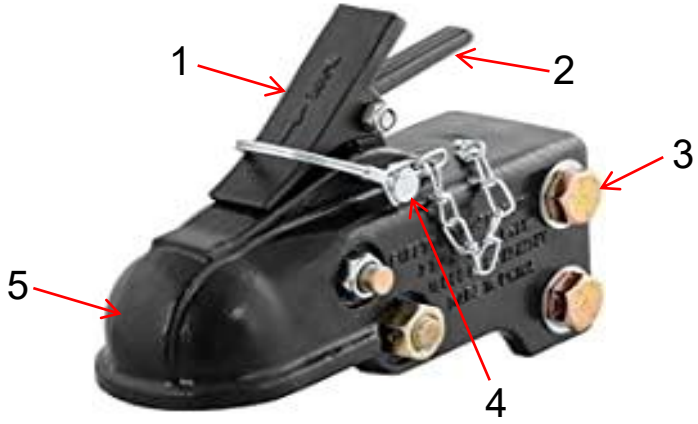

1. Verschluss 2. Griff 3. Verbindungsbolzen 4. Sicherheitsstift 5. Kugelpfanne

COMPONENTS

NEIN.	Bild	Name	Men
1		Anhängerkupplung	1
2		Bolzen	2
3		Kontermutter	2
4		Unterlegscheibe	4
5		Kanalhalterung (nur SS-CK-03)	1
6		Bedienungsanleitung	1

E. Kanalhalterung ("SS-TC-12BS" beinhaltet das Bauteil nicht.)

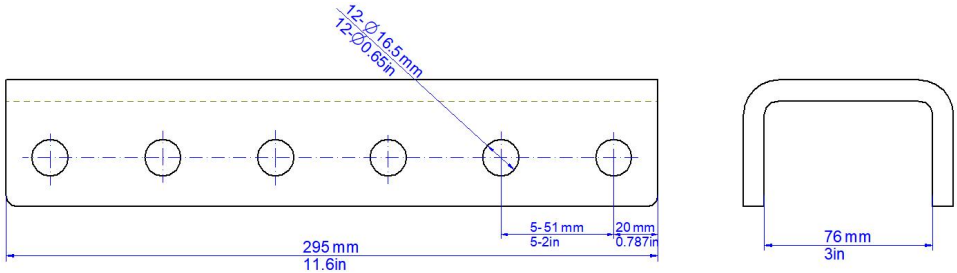

HINWEIS: Die Schweißnaht muss fest und zuverlässig sein.

F. Koppler

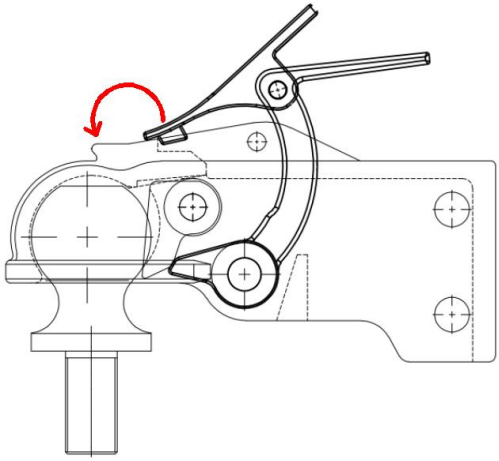

Zum Öffnen den Kupplungsgriff nach oben ziehen und nach vorne drehen. Kupplung auf die Kugel setzen. Wenn die Kugel vollständig in der Kugelpfanne sitzt, Kupplungsgriff nach hinten drehen, bis er in verriegelter Position ist. Sicherheitsriegel einstecken.

Nach 50 Meilen Schleppen prüfen Sie, ob die Kupplung fest auf der Kugel sitzt. Prüfen Sie vor dem Schleppen immer, ob die Kupplung fest sitzt. Stellen Sie sicher, dass der Kupplungsgriff verriegelt ist.

MAINTENANCE

1. Bitte überprüfen Sie vor jedem Gebrauch, ob die Schrauben fest sitzen.
2. Nicht überladen.
3. Achten Sie auf Rostschutz.

IN CHINA HERGESTELLT

VEVOR®

TOUGH TOOLS, HALF PRICE

Technischer Support und E-Garantie-Zertifikat

www.vevor.com/support

VEVOR®

TOUGH TOOLS, HALF PRICE

Supporto tecnico e certificato di garanzia elettronica www.vevor.com/support

ATTACCO PER RIMORCHIO

MODELLO: SS-TC-12BS / SS-CK-03

We continue to be committed to provide you tools with competitive price.
"Save Half", "Half Price" or any other similar expressions used by us only represents an estimate of savings you might benefit from buying certain tools with us compared to the major top brands and doses not necessarily mean to cover all categories of tools offered by us. You are kindly reminded to verify carefully when you are placing an order with us if you are actually saving half in comparison with the top major brands.

VEVOR®
TOUGH TOOLS, HALF PRICE

TRAILER COUPLER

MODELLO: SS -TC-12BS / SS-CK-03

NEED HELP? CONTACT US!

Have product questions? Need technical support? Please feel free to contact us:

Technical Support and E-Warranty Certificate
www.vevor.com/support

This is the original instruction, please read all manual instructions carefully before operating. VEVOR reserves a clear interpretation of our user manual. The appearance of the product shall be subject to the product you received. Please forgive us that we won't inform you again if there are any technology or software updates on our product.

SAFETY INSTRUCTIONS

⚠WARNING

19. È obbligatorio utilizzare catene di sicurezza.
20. Assicuratevi di indossare una buona protezione durante i lavori di saldatura.
21. Assicuratevi di controllare che i bulloni siano ben serrati .
22. Assicuratevi di abbinare la sfera del rimorchio corrispondente.
23. Dopo aver trainato per 50 miglia, controllare che l'accoppiatore sia ben stretto sulla sfera. Controllare sempre che sia ben stretto prima di trainare. Assicurarsi che la maniglia dell'accoppiatore sia in posizione bloccata.
24. Non superare la portata massima del rimorchio.

MODEL AND PARAMETERS

Modello	SS -TC-12BS	SS-CK-03
Capacità	15000 libbre	15000 libbre
Dimensioni della	2-5/16 pollici	2-5/16 pollici
Diametro /	3 pollici	3 pollici
Colore	Nero	Nero
Osservazioni	/	Con staffa per canale regolabile a 5 posizioni

STRUCTURE DIAGRAM

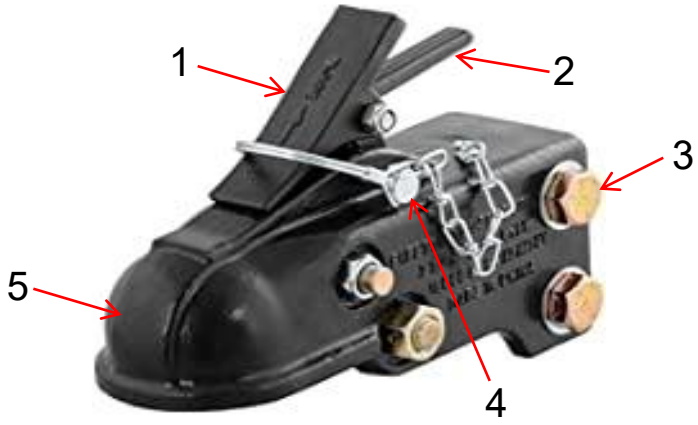

1. Elemento di fissaggio 2. Maniglia 3. Bullone di collegamento 4. Perno di sicurezza 5. Presa a sfera

COMPONENTS

NO.	Immagine	Nome	Qua
1		Attacco per rimorchio	1
2		Bullone	2
3		Controdado	2
4		Spessore	4
5		Staffa per canale (solo SS-CK-03)	1
6		Manuale d'uso	1

G. Staffa del canale ("SS-TC-12BS" non include il componente.)

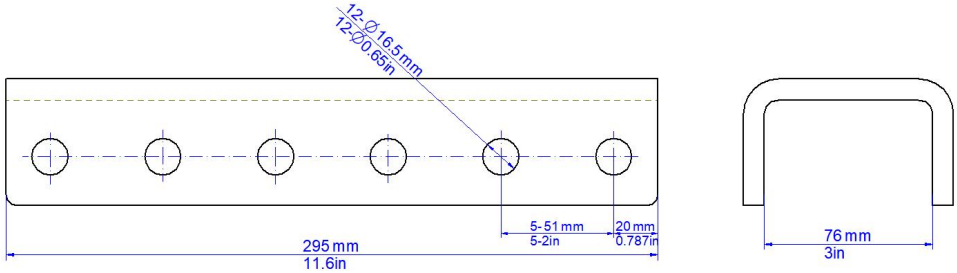

NOTA: la saldatura deve essere salda e affidabile.

H. Accoppiatore

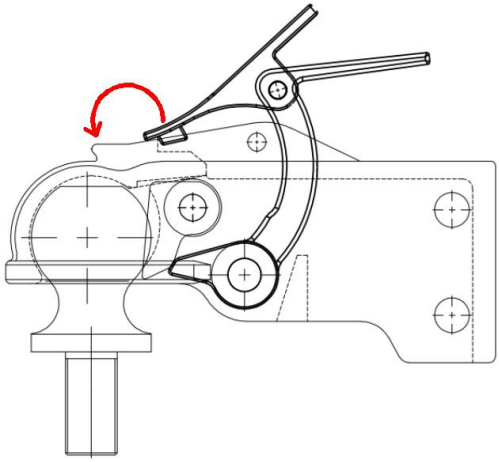

Per aprire, tirare verso l'alto la maniglia dell'accoppiatore e ruotare in avanti. Posizionare l'accoppiatore sulla sfera. Quando la sfera è completamente annidata nella sede della sfera, ruotare la maniglia dell'accoppiatore all'indietro finché la maniglia non è in posizione di blocco. Inserire il fermo di sicurezza.

Dopo aver trainato per 50 miglia, controllare che l'accoppiatore sia ben stretto sulla sfera. Controllare sempre che sia ben stretto prima di trainare.

Assicurarsi che la maniglia dell'accoppiatore sia in posizione bloccata.

MAINTENANCE

1. Controllare che i bulloni siano ben serrati prima di ogni utilizzo.
2. Non sovraccaricare.
3. Prestare attenzione alla prevenzione della ruggine.

MADE IN CHINA

VEVOR®

TOUGH TOOLS, HALF PRICE

Supporto tecnico e certificato di garanzia elettronica

www.vevor.com/support

VEVOR®

TOUGH TOOLS, HALF PRICE

Soporte técnico y certificado de garantía electrónica www.vevor.com/support

ACOPLAMIENTO DE REMOLQUE

MODELO: SS-TC-12BS / SS-CK-03

We continue to be committed to provide you tools with competitive price.
"Save Half", "Half Price" or any other similar expressions used by us only represents an estimate of savings you might benefit from buying certain tools with us compared to the major top brands and doses not necessarily mean to cover all categories of tools offered by us. You are kindly reminded to verify carefully when you are placing an order with us if you are actually saving half in comparison with the top major brands.

VEVOR®
TOUGH TOOLS, HALF PRICE

TRAILER COUPLER

MODELO: SS -TC-12BS / SS-CK-03

NEED HELP? CONTACT US!

Have product questions? Need technical support? Please feel free to contact us:

Technical Support and E-Warranty Certificate
www.vevor.com/support

This is the original instruction, please read all manual instructions carefully before operating. VEVOR reserves a clear interpretation of our user manual. The appearance of the product shall be subject to the product you received. Please forgive us that we won't inform you again if there are any technology or software updates on our product.

SAFETY INSTRUCTIONS

⚠WARNING

25. Se deben utilizar cadenas de seguridad.
26. Asegúrese de llevar una buena protección durante los trabajos de soldadura.
27. Asegúrese de comprobar que los tornillos estén bien apretados .
28. Asegúrese de hacer coincidir la bola de remolque correspondiente.
29. Después de remolcar durante 50 millas, verifique que el enganche esté bien apretado en la bola. Siempre verifique que esté bien apretado antes de remolcar. Asegúrese de que la manija del enganche esté en la posición bloqueada.
30. No exceda la capacidad de peso bruto del remolque.

MODEL AND PARAMETERS

Modelo	SS -TC-12BS	SS-CK-03
Capacidad	15000 libras	15000 libras
Tamaño de la pelota	2-5/16 pulgadas	2-5/16 pulgadas
Diámetro / longitud	3 pulgadas	3 pulgadas
Color	Negro	Negro
Observaciones	/	Con soporte de canal ajustable de 5 posiciones

STRUCTURE DIAGRAM

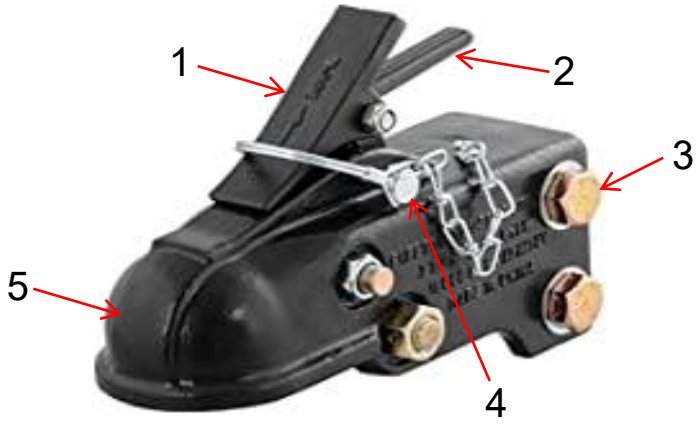

1. Sujetador 2. Mango 3. Perno de conexión 4. Pasador de seguridad 5. Casquillo esférico

COMPONENTS

No.	Imagen	Nombre	Cant
1		Acoplamiento de remolque	1
2		Tornillo	2
3		Tuerca de seguridad	2
4		Calce	4
5		Soporte de canal (solo SS-CK-03)	1
6		Manual de usuario	1

OPERATION

I. Soporte de canal ("SS-TC-12BS" no incluye el componente) .

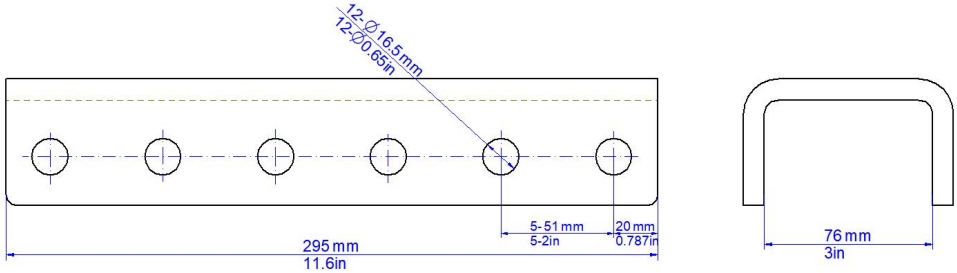

NOTA: La soldadura debe ser firme y confiable.

J. Acoplador

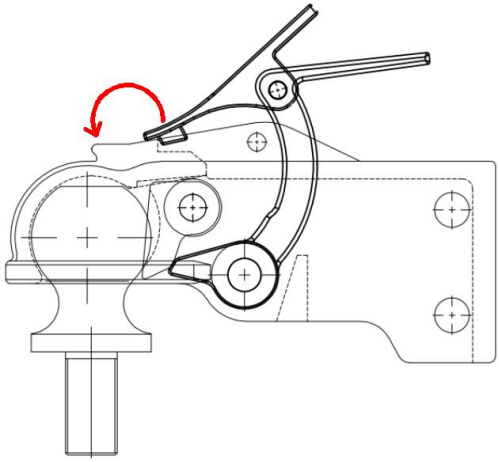

Para abrir, tire hacia arriba de la manija del acoplador y gírela hacia adelante. Coloque el acoplador sobre la bola. Cuando la bola esté completamente encajada en el receptáculo de la bola, gire la manija del acoplador hacia atrás hasta que la manija esté en la posición bloqueada. Conecte el pestillo de seguridad.

Después de remolcar durante 50 millas, verifique que el enganche esté bien apretado en la bola. Siempre verifique que esté bien apretado antes

de remolcar. Asegúrese de que la manija del enganche esté en la posición bloqueada.

MAINTENANCE

1. Compruebe que los tornillos estén bien apretados antes de cada uso.
2. No sobrecargue.
3. Preste atención a la prevención de la oxidación.

HECHO EN CHINA

VEVOR®

TOUGH TOOLS, HALF PRICE

Soporte técnico y certificado de garantía electrónica

www.vevor.com/support

VEVOR®

TOUGH TOOLS, HALF PRICE

Wsparcie techniczne i certyfikat e-gwarancji www.vevor.com/support

SPRZĘG PRZYCZEPY

MODELE: SS-TC-12BS / SS-CK-03

We continue to be committed to provide you tools with competitive price.
"Save Half", "Half Price" or any other similar expressions used by us only represents an estimate of savings you might benefit from buying certain tools with us compared to the major top brands and doses not necessarily mean to cover all categories of tools offered by us. You are kindly reminded to verify carefully when you are placing an order with us if you are actually saving half in comparison with the top major brands.

VEVOR®
TOUGH TOOLS, HALF PRICE

TRAILER COUPLER

MODEL: SS -TC-12BS / SS-CK-03

NEED HELP? CONTACT US!

Have product questions? Need technical support? Please feel free to contact us:

Technical Support and E-Warranty Certificate
www.vevor.com/support

This is the original instruction, please read all manual instructions carefully before operating. VEVOR reserves a clear interpretation of our user manual. The appearance of the product shall be subject to the product you received. Please forgive us that we won't inform you again if there are any technology or software updates on our product.

SAFETY INSTRUCTIONS

⚠WARNING

31. Należy stosować łańcuchy bezpieczeństwa.
32. Podczas prac spawalniczych należy zadbać o odpowiednią ochronę.
33. Sprawdź dokładnie, czy śruby są dobrze dokręcone .
34. Pamiętaj o dopasowaniu odpowiedniej kuli przyczepy.
35. Po holowaniu przez 50 mil sprawdź szczelność zaczepu na kuli. Zawsze sprawdzaj szczelność przed holowaniem. Upewnij się, że uchwyt zaczepu jest w pozycji zablokowanej.
36. Nie przekraczać dopuszczalnej masy całkowitej przyczepy.

MODEL AND PARAMETERS

Model	SS -TC-12BS	SS-CK-03
Pojemność	15000 funtów	15000 funtów
Rozmiar piłki	2-5/16 cala	2-5/16 cala
Średnica / długość	3 cale	3 cale
Kolor	Czarny	Czarny
Uwagi	/	Z 5-pozycyjnym regulowanym uchwytem kanałowym

STRUCTURE DIAGRAM

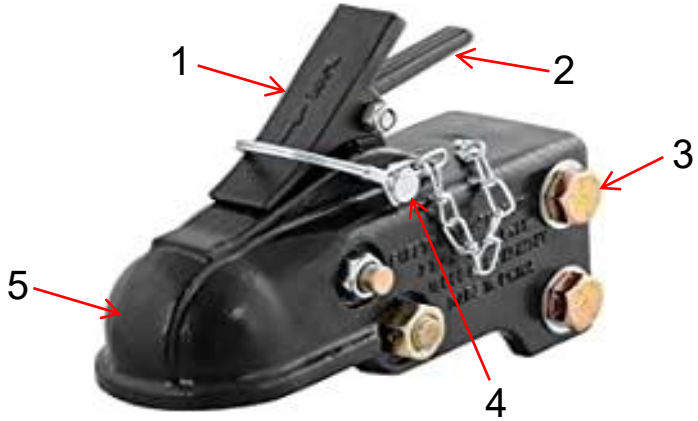

1. Łącznik 2. Uchwyt 3. Śruba łącząca 4. Kołek zabezpieczający 5. Gniazdo kulowe

COMPONENTS

NIE.	Zdjęcie	Nazwa	Iloś
1		Sprzęg przyczepy	1
2		Śruba	2
3		Nakrętka zabezpieczająca	2
4		Podkładka	4
5		Uchwyt kanałowy (tylko SS-CK-03)	1
6		Instrukcja obsługi	1

K. Uchwyt kanału („SS-TC-12BS” nie obejmuje tego komponentu.)

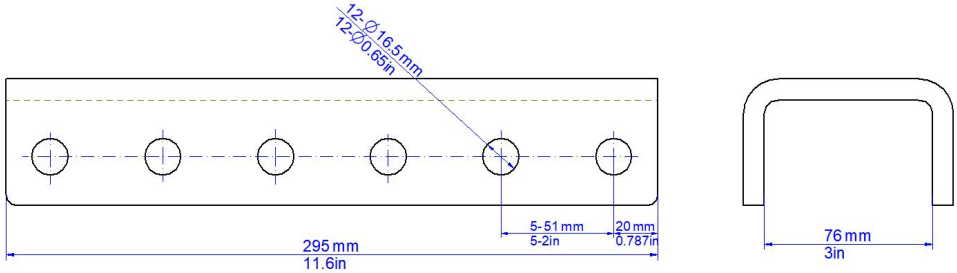

UWAGA: Spawy muszą być solidne i niezawodne.

L. Łącznik

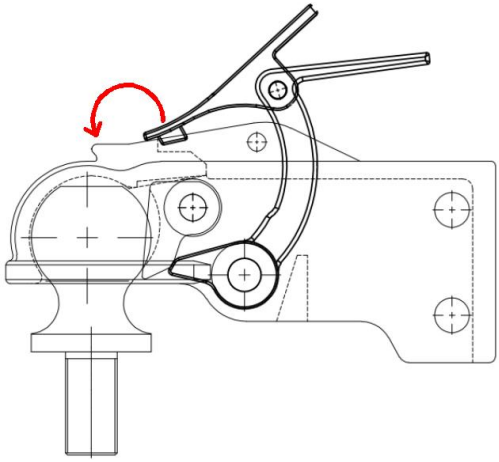

Aby otworzyć, pociągnij za uchwyt sprzęgu i obróć do przodu. Umieść sprzęg na kuli. Gdy kula jest całkowicie osadzona w gnieździe kuli, obróć uchwyt sprzęgu do tyłu, aż uchwyt znajdzie się w pozycji zablokowanej.

Podłącz zatrzask bezpieczeństwa.

Po holowaniu przez 50 mil sprawdź szczelność zaczepu na kuli. Zawsze sprawdzaj szczelność przed holowaniem. Upewnij się, że uchwyt zaczepu

jest w pozycji zablokowanej.

MAINTENANCE

1. Przed każdym użyciem sprawdź, czy śruby są dokręcone.
2. Nie przeciążaj.
3. Zwróć uwagę na ochronę przed rdzą.

WYKONANO W CHINACH

VEVOR®

TOUGH TOOLS, HALF PRICE

Certyfikat wsparcia technicznego i gwarancji elektronicznej

www.vevor.com/support

VEVOR®

TOUGH TOOLS, HALF PRICE

Technische ondersteuning en e-garantiecertificaat www.vevor.com/support

AANHANGWAGENKOPPELING

MODEL: SS-TC-12BS / SS-CK-03

We continue to be committed to provide you tools with competitive price.
"Save Half", "Half Price" or any other similar expressions used by us only represents an estimate of savings you might benefit from buying certain tools with us compared to the major top brands and doses not necessarily mean to cover all categories of tools offered by us. You are kindly reminded to verify carefully when you are placing an order with us if you are actually saving half in comparison with the top major brands.

VEVOR®
TOUGH TOOLS, HALF PRICE

TRAILER COUPLER

MODEL: SS -TC-12BS / SS-CK-03

NEED HELP? CONTACT US!

Have product questions? Need technical support? Please feel free to contact us:

Technical Support and E-Warranty Certificate
www.vevor.com/support

This is the original instruction, please read all manual instructions carefully before operating. VEVOR reserves a clear interpretation of our user manual. The appearance of the product shall be subject to the product you received. Please forgive us that we won't inform you again if there are any technology or software updates on our product.

SAFETY INSTRUCTIONS

⚠WARNING

37. Er moeten veiligheidskettingen worden gebruikt.
38. Zorg ervoor dat u goede bescherming draagt tijdens laswerkzaamheden.
39. Controleer of de bouten goed vastzitten .
40. Zorg ervoor dat je de juiste trailerbal gebruikt.
41. Controleer na 50 mijl slepen of de koppeling stevig op de kogel zit. Controleer altijd de stevigheid voordat u gaat slepen. Zorg ervoor dat de koppelingshendel in de vergrendelde positie staat.
42. het maximaal toegestane totaalgewicht van de aanhanger niet .

MODEL AND PARAMETERS

Model	SS -TC-12BS	SS-CK-03
Capaciteit	15000 pond	15000 pond
Balgrootte	2-5/16 inch	2-5/16 inch
Toepasselijke	3 inch	3 inch
Kleur	Zwart	Zwart
Opmerkingen	/	Met 5-positie verstelbare kanaalbeugel

STRUCTURE DIAGRAM

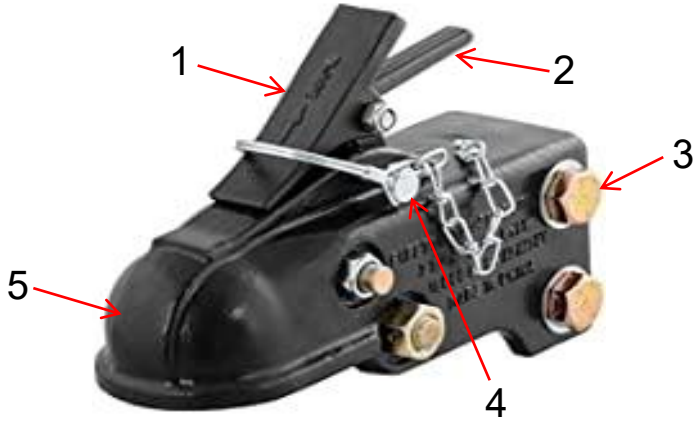

1. Bevestigingsmiddel 2. Handvat 3. Verbindingsbout 4. Veiligheidspen 5. Kogelgewricht

COMPONENTS

Nee.	Afbeelding	Naam	Hoe
1		Aanhangwagenkoppeling	1
2		Bout	2
3		Borgmoer	2
4		Vulstuk	4
5		Kanaalbeugel (alleen SS-CK-03)	1
6		Gebruiksaanwijzing	1

M. Kanaalbeugel ("SS-TC-12BS" bevat geen onderdeel.)

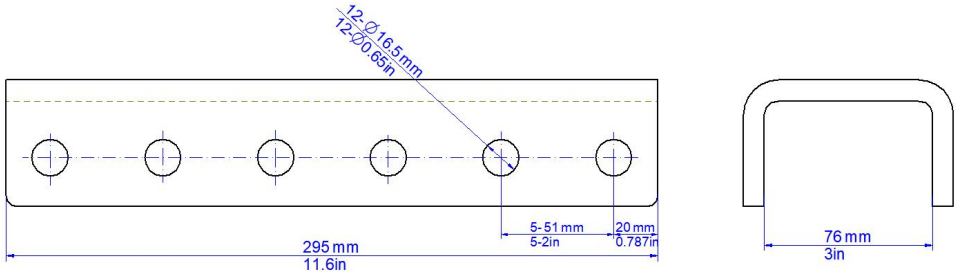

LET OP: Het lassen moet stevig en betrouwbaar zijn.

N. Koppeling

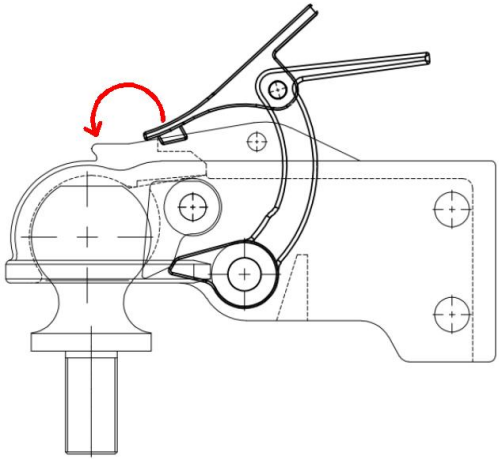

Om te openen, trek aan de koppelingshendel en draai naar voren. Plaats de koppeling op de kogel. Wanneer de kogel volledig in de kogelhouder zit, draai de koppelingshendel naar achteren totdat de hendel in de vergrendelde positie staat. Sluit de veiligheidsgrendel aan.
Controleer na 50 mijl slepen of de koppeling stevig op de kogel zit. Controleer altijd de stevigheid voordat u gaat slepen. Zorg ervoor dat de koppelingshendel in de vergrendelde positie staat.

MAINTENANCE

1. Controleer voor elk gebruik of de bouten goed vastzitten.
2. Overbelast niet.
3. Let op roestpreventie.

Gemaakt in China

VEVOR®

TOUGH TOOLS, HALF PRICE

Technische ondersteuning en e-garantiecertificaat

www.vevor.com/support

VEVOR®

TOUGH TOOLS, HALF PRICE

Teknisk support och e-garanticertifikat www.vevor.com/support

SLÄPVAGNSKOPPLING

MODELL: SS-TC-12BS / SS-CK-03

We continue to be committed to provide you tools with competitive price.
"Save Half", "Half Price" or any other similar expressions used by us only represents an estimate of savings you might benefit from buying certain tools with us compared to the major top brands and doses not necessarily mean to cover all categories of tools offered by us. You are kindly reminded to verify carefully when you are placing an order with us if you are actually saving half in comparison with the top major brands.

VEVOR®
TOUGH TOOLS, HALF PRICE

TRAILER COUPLER

MODELL: SS -TC-12BS / SS-CK-03

NEED HELP? CONTACT US!

Have product questions? Need technical support? Please feel free to contact us:

Technical Support and E-Warranty Certificate
www.vevor.com/support

This is the original instruction, please read all manual instructions carefully before operating. VEVOR reserves a clear interpretation of our user manual. The appearance of the product shall be subject to the product you received. Please forgive us that we won't inform you again if there are any technology or software updates on our product.

SAFETY INSTRUCTIONS

⚠WARNING

43. Säkerhetskedjor måste användas.
44. Se till att ta bra skydd under svetsarbeten.
45. Se till att kontrollera att bultarna är åtdragna .
46. Se till att matcha motsvarande trailerkula.
47. Efter bogsering i 50 miles, kontrollera att kopplingen är tät på kulan. Kontrollera alltid tätheten innan bogsering. Se till att kopplingshandtaget är i låst läge.
48. Överskrid inte släpvagnens totalvikt.

MODEL AND PARAMETERS

Modell	SS -TC-12BS	SS-CK-03
C kapacitet	15 000 pund	15 000 pund
Kulstorlek	2-5/16 tum	2-5/16 tum
Tillämplig	3 tum	3 tum
Färg	Svart	Svart
Anmärkningar	/	Med 5-positions justerbart kanalfäste

STRUCTURE DIAGRAM

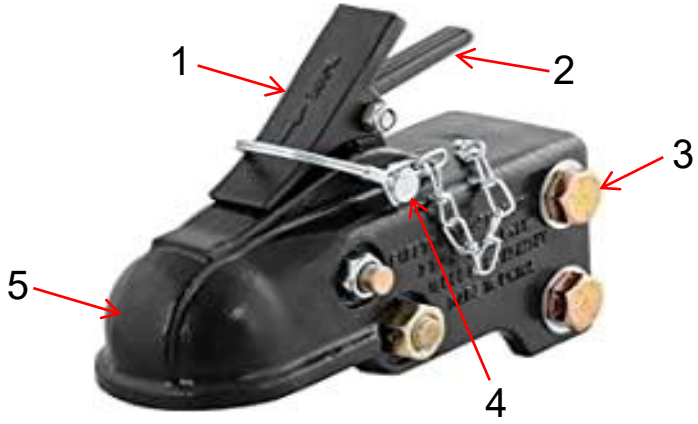

1. Fästelement 2. Handtag 3. Anslutningsbult 4. Säkerhetsstift 5. Kulhylsa

COMPONENTS

Inga.	Bild	Namn	Anta
1		Släpvagnskoppling	1
2		Bult	2
3		Låsmutter	2
4		Shim	4
5		Kanalfäste (endast SS-CK-03)	1
6		Användarmanual	1

O. Kanalfäste ("SS-TC-12BS" inkluderar inte komponenten.)

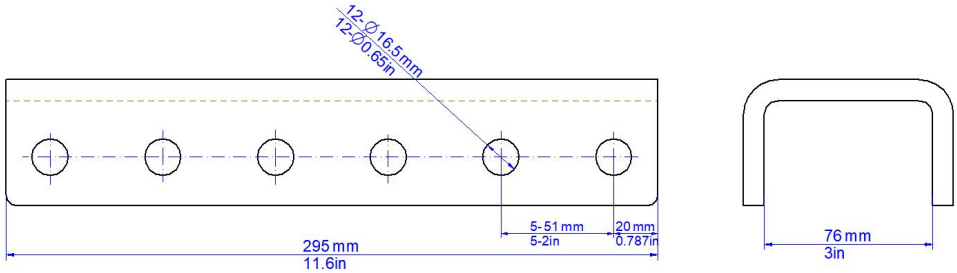

OBS: Svetsningen måste vara fast och pålitlig.

P. Kopplare

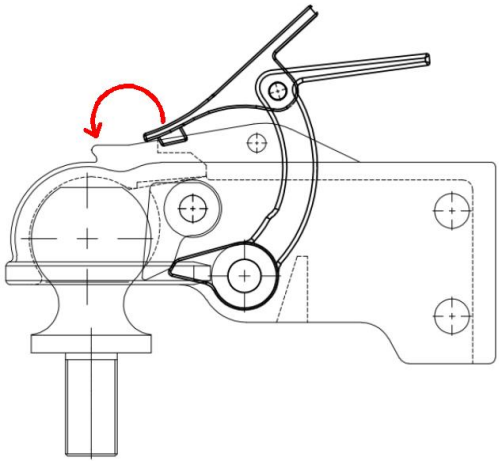

För att öppna, dra upp kopplingshandtaget och rotera framåt. Placera kopplingen på kulan. När kulan är helt inkapslad i kulhylsan, vrid kopplingshandtaget bakåt tills handtaget är i låst läge. Sätt i säkerhetsspärren.

Efter bogsering i 50 miles, kontrollera att kopplingen är tät på kulan. Kontrollera alltid tätheten innan bogsering. Se till att kopplingshandtaget är i låst läge.

MAINTENANCE

1. Kontrollera att bultarna är åtdragna före varje användning.
2. Överbelasta inte.
3. Var uppmärksam på att förhindra rost.

GJORT I KINA

VEVOR®

TOUGH TOOLS, HALF PRICE

Teknisk support och e-garanticertifikat

www.vevor.com/support