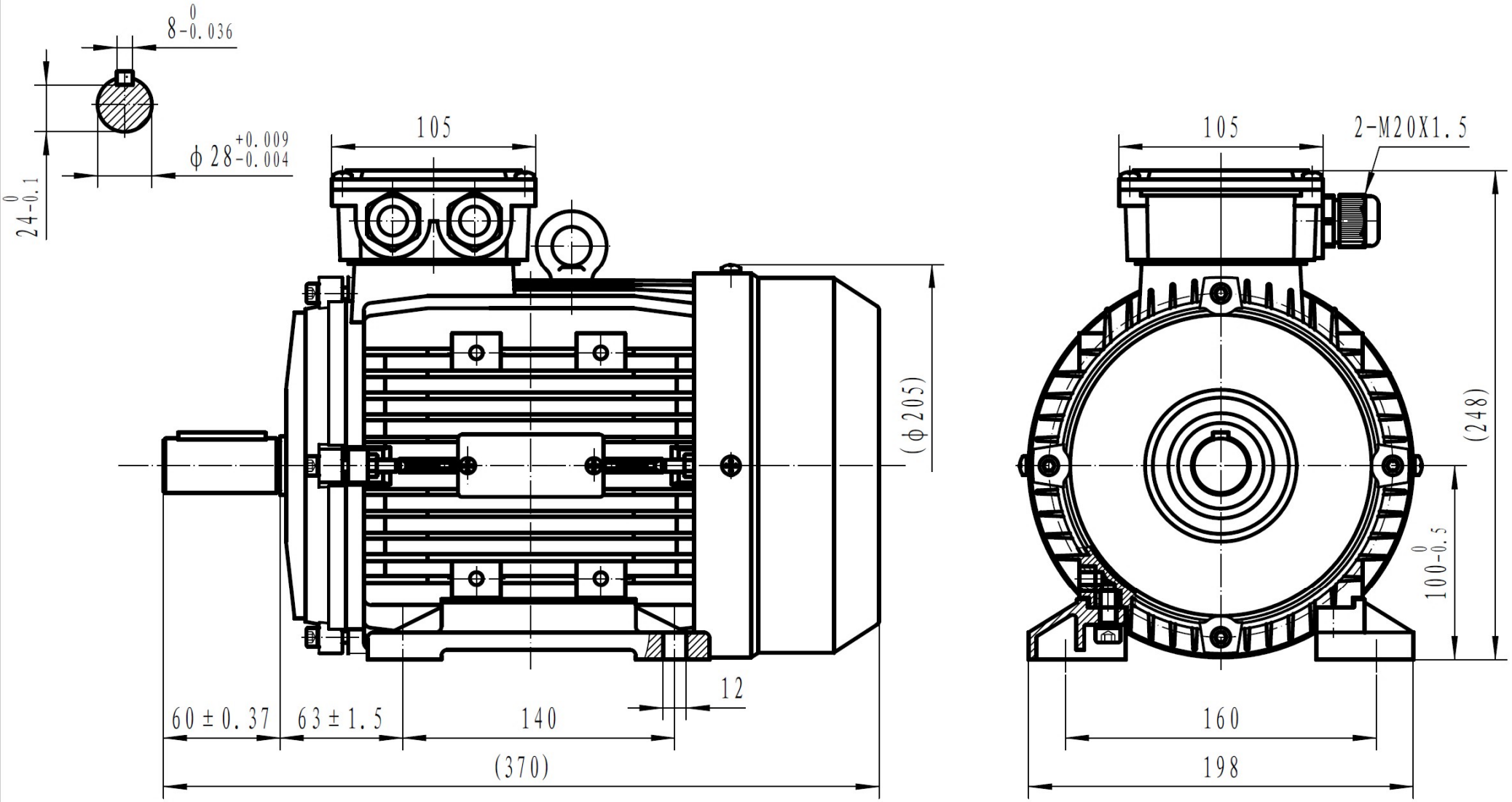
8-0.036 0
24-0.1 0
ϕ28 +0.009 -0.004
105
(ϕ205)
12
60±0.37
63±1.5
140
(370)
105
2-M20X1.5
(248)
100-0.5 0
160
198

# MS 100L2-4 B3