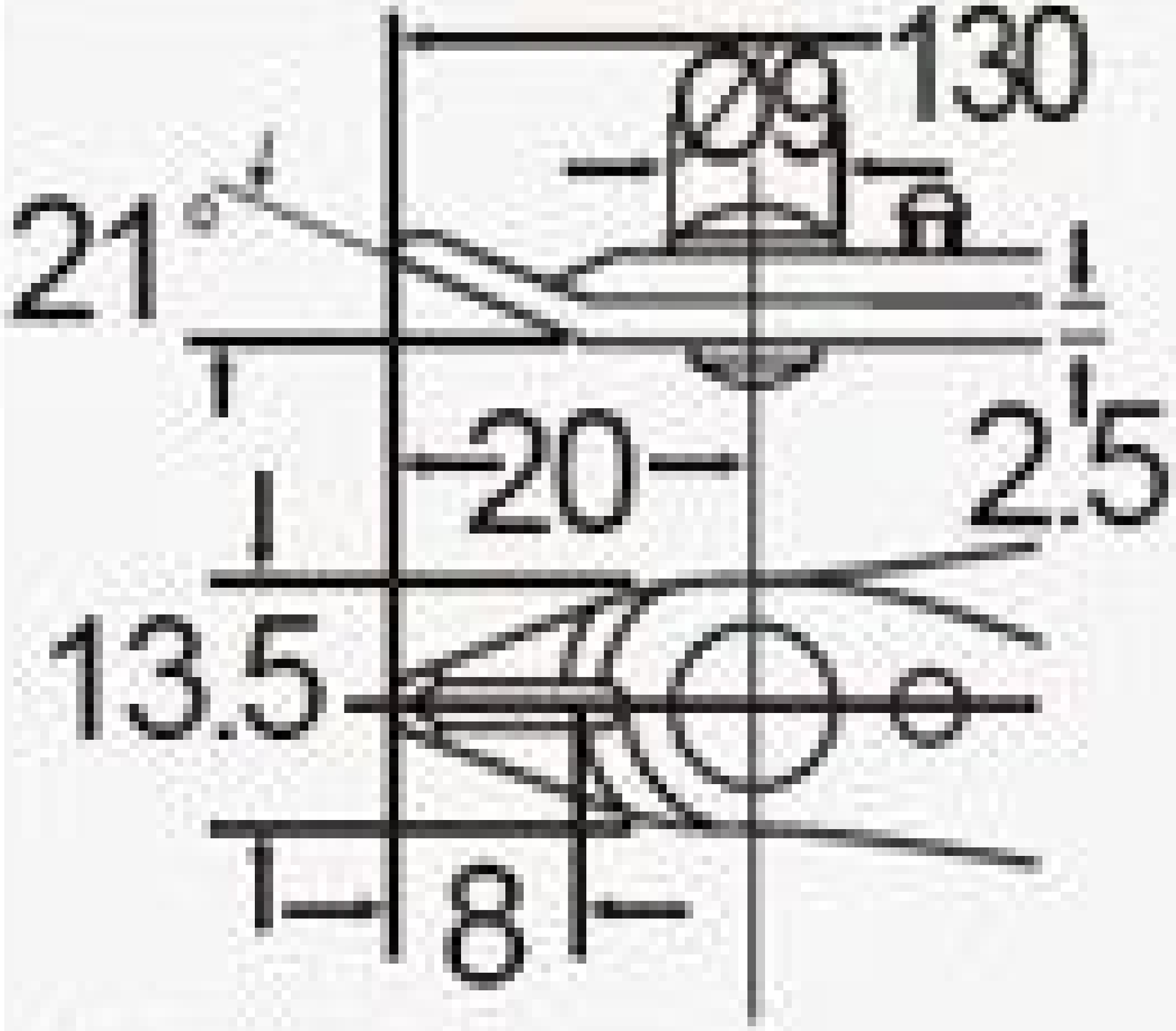


Unit: mm