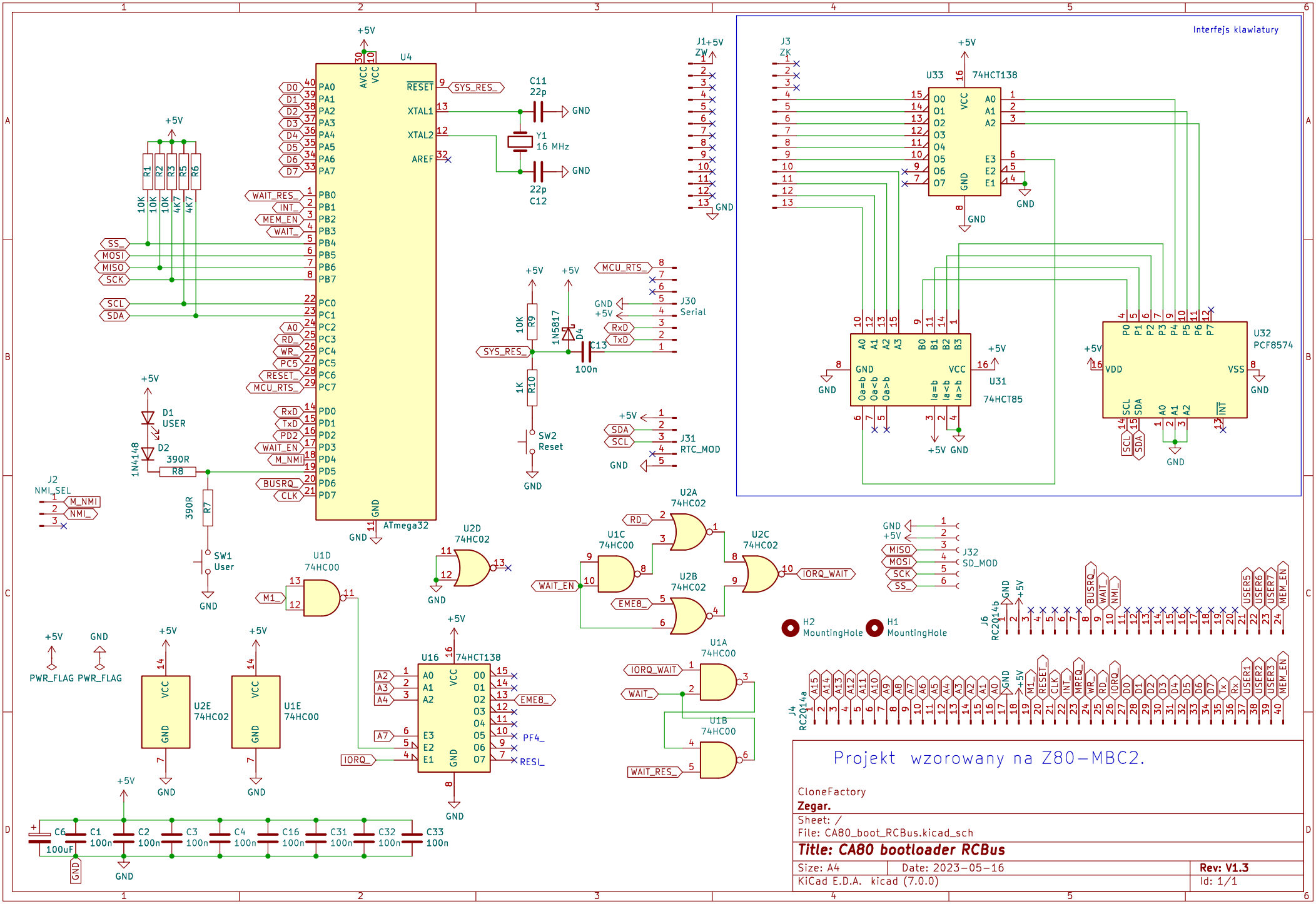
Interfejs klawiatury
U4
ATmega32
U33
74HCT138
U31
74HCT85
U32
PCF8574
U16
74HCT138
U2A
74HC02
U2B
74HC02
U2C
74HC02
U2D
74HC02
U2E
74HC02
U1A
74HC00
U1B
74HC00
U1C
74HC00
U1D
74HC00
U1E
74HC00
Y1
16 MHz
J30
Serial
J31
RTC_MOD
J32
SD_MOD
J2
NMI_SEL
J6
RC2014b
J4
RC2014a
H2
MountingHole
H1
MountingHole
Projekt wzorowany na Z80-MBC2.
CloneFactory
Zegar.
Sheet: /
File: CA80_boot_RCBus.kicad_sch
Title: CA80 bootloader RCBus
Size: A4
Date: 2023-05-16
Rev: V1.3
KiCad E.D.A. kicad (7.0.0)
Id: 1/1