VEVOR®

TOUGH TOOLS, HALF PRICE

Technical Support and E-Warranty Certificate www.vevor.com/support

RAILING SHOES

MODEL:LGXZ-0.5in-P-50/LGXZ-0.5in-X-50

We continue to be committed to provide you tools with competitive price.
"Save Half", "Half Price" or any other similar expressions used by us only represents an estimate of savings you might benefit from buying certain tools with us compared to the major top brands and does not necessarily mean to cover all categories of tools offered by us. You are kindly reminded to verify carefully when you are placing an order with us if you are actually saving half in comparison with the top major brands.

VEVOR®

TOUGH TOOLS, HALF PRICE

RAILING SHOES

MODEL: LGXZ-0.5in-P-50 LGXZ-0.5in-X-50

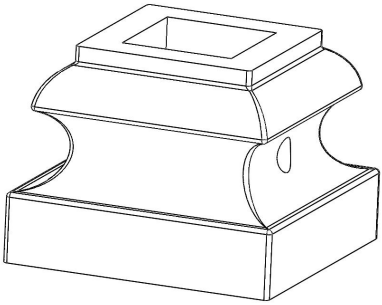

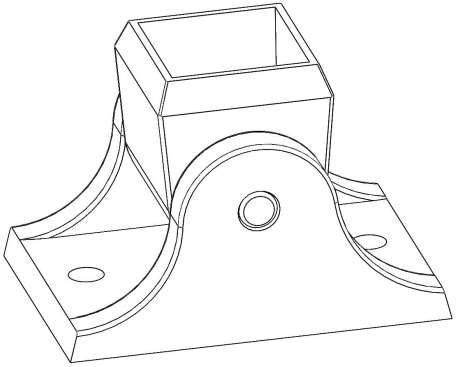

NEED HELP? CONTACT US!

Have product questions? Need technical support? Please feel free to contact us:

Technical Support and E-Warranty Certificate
www.vevor.com/support

This is the original instruction, please read all manual instructions carefully before operating. VEVOR reserves a clear interpretation of our user manual. The appearance of the product shall be subject to the product you received. Please forgive us that we won't inform you again if there are any technology or software updates on our product.

WARNING:

1. Do not allow children to climb on the unit. 2. Keep children and pets away during assembly.

ASSEMBLY PRECAUTIONS

1. Please assemble the product in strict accordance with the instructions. Incorrect assembly could be hazardous.
2. Please wear safety goggles and work gloves properly during assembly.
3. Do not try to assemble the product when feeling tired or when under the influence of alcohol, drugs or medication.
4. Load bearing capacity and other product parameters are applied to the properly and completely assembled product only.
5. Separate and count all parts and hardware.
6. Prepare the following tool: Philips Head Screwdriver.
7. If using power tools, please be careful to slow down and stop when needed.
8. Two people are required for assembly.
9. Follow the intended uses only.

Save the instruction.

Product Paremeters

Model	LGXZ-0.5in-P-50	LGXZ-0.5in-X-50
Post Size	1/2 inch	1/2 inch
Inner Size	0.53 x 0.53 inch	0.53 x 0.53 inch
Number of Items	50 PCS	50 PCS
Colour	Black	Black

Installation Instructions

The Railing shoes come with a set screw, pre-drilled holes on the baluster shoes simply screws down on to the rail with the provided screws make installation quick and easy.	The Railing shoes will create a beautiful deck or porch railing for you，it is can be mounted on flat surface .	The Railing shoes is great for outdoor or indoor stair,easy cover an unattractive bare post anchor,greatly enhancing the modern look of your railings.
The Railing shoes fit for most railing frames. Use them to protect your deck from damage. You can adjust the	The iron baluster swivel shoes come with a set screw, pre-drilled holes on the baluster shoes	The Railing shoes will create a beautiful deck or porch railing for you，it is can be mounted on any

direction 180 degrees according to your needs.	simply screws down on to the rail with the provided screws make installation quick and easy.	surface (flat or slant).

Address： Baoshanqu Shuangchenglu 803long 11hao 1602A-1609shi Shanghai
Imported to AUS: SIHAO PTY LTD. 1 ROKEVA STREETEASTWOOD NSW 2122 Australia
Imported to USA: Sanven Technology Ltd. Suite 250, 9166 Anaheim Place, Rancho Cucamonga, CA 91730

UK REP	Pooledas Group Ltd Unit 5 Albert Edward House, The Pavilions Preston, United Kingdom
EC REP	SHUNSHUN GmbH Römeräcker 9 Z2021, 76351 Linkenheim-Hochstetten, Germany

VEVOR®

TOUGH TOOLS, HALF PRICE

Technical Support and E-Warranty Certificate

www.vevor.com/support

Made In China

VEVOR®

TOUGH TOOLS, HALF PRICE

Assistance technique et certificat de garantie électronique www.vevor.com/support

CHAUSSURES DE GARDE-CORPS

MODÈLE : LGXZ-0,5 pouces-P-50/LGXZ-0,5 pouces-X-50

We continue to be committed to provide you tools with competitive price.
"Save Half", "Half Price" or any other similar expressions used by us only represents an estimate of savings you might benefit from buying certain tools with us compared to the major top brands and does not necessarily mean to cover all categories of tools offered by us. You are kindly reminded to verify carefully when you are placing an order with us if you are actually saving half in comparison with the top major brands.

VEVOR®

TOUGH TOOLS, HALF PRICE

RAILING SHOES

MODÈLE: LGXZ-0,5 pouces-P-50 LGXZ-0,5 pouces-X-50

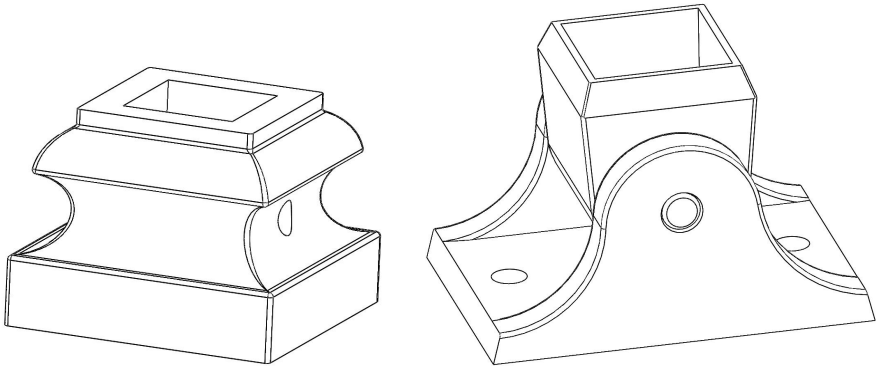

NEED HELP? CONTACT US!

Have product questions? Need technical support? Please feel free to contact us:

Technical Support and E-Warranty Certificate
www.vevor.com/support

This is the original instruction, please read all manual instructions carefully before operating. VEVOR reserves a clear interpretation of our user manual. The appearance of the product shall be subject to the product you received. Please forgive us that we won't inform you again if there are any technology or software updates on our product.

AVERTISSEMENT:

1. Ne laissez pas les enfants grimper sur l'appareil. 2. Éloignez les enfants et les animaux domestiques pendant l'assemblage.

PRÉCAUTIONS DE MONTAGE

1. Veuillez assembler le produit en stricte conformité avec les instructions. Un assemblage incorrect pourrait être dangereux.
2. Veuillez porter correctement des lunettes de sécurité et des gants de travail pendant l'assemblage.
3. N'essayez pas d'assembler le produit lorsque vous vous sentez fatigué ou sous l'influence de l'alcool, de drogues ou de médicaments.
4. La capacité de charge et les autres paramètres du produit sont appliqués uniquement au produit correctement et complètement assemblé.
5. Séparez et comptez toutes les pièces et le matériel.
6. Préparez l'outil suivant : Tournevis cruciforme.
7. Si vous utilisez des outils électriques, veillez à ralentir et à vous arrêter si nécessaire.
8. Deux personnes sont nécessaires pour le montage.
9. Suivez uniquement les utilisations prévues.

Enregistrez les instructions.

Paramètres du produit

Modèle	**LGXZ-0,5 pouces-P-50**	**LGXZ-0,5 pouces-X-50**
Taille du message	1/2 pouce	1/2 pouce
Taille intérieure	0,53x0,53 pouces	0,53x0,53 pouces
Nombre d'objets	50 pièces	50 pièces
Couleur	Noir	Noir

instructions d'installation

Les patins de garde-corps sont livrés avec une vis de réglage, des trous pré-percés sur les patins de balustre se vissent simplement sur le rail avec les vis fournies pour une installation rapide et facile.	Les chaussures de garde-corps créeront pour vous une belle balustrade de terrasse ou de porche. Elles peuvent être montées sur une surface plane.	Les chaussures de garde-corps sont idéales pour les escaliers extérieurs ou intérieurs, couvrent facilement un ancrage de poteau nu peu attrayant, améliorant considérablement l'apparence moderne de vos garde-corps.
Les patins de garde-corps conviennent à la plupart des cadres de	Les patins pivotants à balustre en fer sont	Les chaussures de garde-corps créeront

garde-corps. Utilisez-les pour protéger votre pont contre les dommages. Vous pouvez ajuster la direction à 180 degrés selon vos besoins.	livrés avec une vis de réglage. Les trous pré-percés sur les patins à balustre se vissent simplement sur le rail avec les vis fournies pour une installation rapide et facile .	pour vous une belle balustrade de terrasse ou de porche. Elles peuvent être montées sur n'importe quelle surface (plate ou inclinée).

Adresse : Baoshanqu Shuangchenglu 803long 11hao 1602A-1609shi Shanghai
Importé en Australie : SIHAO PTY LTD . 1 ROKEVA STREETASTWOOD NSW 2122 Australie
Importé aux États-Unis : Sanven Technology Ltd. Suite 250, 9166 Anaheim Place, Rancho Cucamonga, CA 91730

UK REP	Pooledas Group Ltd Unit 5 Albert Edward House, The Pavilions Preston, United Kingdom
EC REP	SHUNSHUN GmbH Römeräcker 9 Z2021, 76351 Linkenheim-Hochstetten, Germany

VEVOR®

TOUGH TOOLS, HALF PRICE

Assistance technique et certificat de garantie électronique

www.vevor.com/support

Fabriqué en Chine

VEVOR®

TOUGH TOOLS, HALF PRICE

Technischer Support und E-Garantiezertifikat www.vevor.com/support

GELÄNDERSCHUHE

MODELL: LGXZ-0.5in-P-50/LGXZ-0.5in-X-50

We continue to be committed to provide you tools with competitive price.
"Save Half", "Half Price" or any other similar expressions used by us only represents an estimate of savings you might benefit from buying certain tools with us compared to the major top brands and does not necessarily mean to cover all categories of tools offered by us. You are kindly reminded to verify carefully when you are placing an order with us if you are actually saving half in comparison with the top major brands.

VEVOR®

TOUGH TOOLS, HALF PRICE

RAILING SHOES

MODELL: LGXZ-0,5 Zoll-P-50 LGXZ-0,5 Zoll-X-50

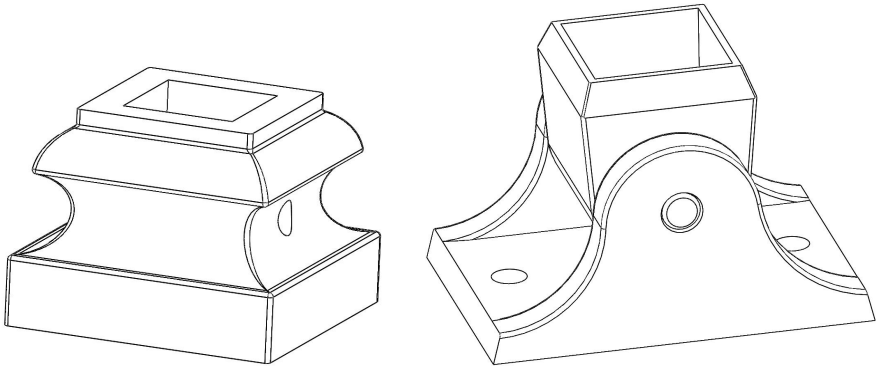

NEED HELP? CONTACT US!

Have product questions? Need technical support? Please feel free to contact us:

Technical Support and E-Warranty Certificate
www.vevor.com/support

This is the original instruction, please read all manual instructions carefully before operating. VEVOR reserves a clear interpretation of our user manual. The appearance of the product shall be subject to the product you received. Please forgive us that we won't inform you again if there are any technology or software updates on our product.

WARNUNG:

1. Erlauben Sie Kindern nicht, auf das Gerät zu klettern. 2. Halten Sie Kinder und Haustiere während der Montage fern.

VORSICHTSMASSNAHMEN BEI DER MONTAGE

1. Bitte bauen Sie das Produkt unter strikter Einhaltung der Anweisungen zusammen. Eine falsche Montage kann gefährlich sein.
2. Bitte tragen Sie bei der Montage ordnungsgemäß eine Schutzbrille und Arbeitshandschuhe.
3. Versuchen Sie nicht, das Produkt zusammenzubauen, wenn Sie sich müde fühlen oder unter dem Einfluss von Alkohol, Drogen oder Medikamenten stehen.
4. Tragfähigkeit und andere Produktparameter beziehen sich ausschließlich auf das ordnungsgemäß und vollständig montierte Produkt.
5. Trennen und zählen Sie alle Teile und Hardware.
6. Bereiten Sie das folgende Werkzeug vor: Kreuzschlitzschraubendreher.
7. Wenn Sie Elektrowerkzeuge verwenden, achten Sie bitte darauf, langsamer zu fahren und bei Bedarf anzuhalten.
8. Für den Aufbau sind zwei Personen erforderlich.
9. Befolgen Sie nur die vorgesehenen Verwendungszwecke.

Speichern Sie die Anweisung.

Produktparameter

Modell	**LGXZ-0,5in-P-50**	**LGXZ-0,5in-X-50**
Beitragsgröße	1/2 Zoll	1/2 Zoll
Innere Größe	0,53 x 0,53 Zoll	0,53 x 0,53 Zoll
Anzahl der Teile	50 STÜCK	50 STÜCK

Farbe	Schwarz	Schwarz

Installationsanleitung

Die Geländerschuhe werden mit einer Stellschraube geliefert. Vorgebohrte Löcher in den Geländerschuhen lassen sich einfach mit den mitgelieferten Schrauben an der Schiene anschrauben und ermöglichen eine schnelle und einfache Installation.	den Geländerschuhen können Sie ein wunderschönes Terrassen- oder Verandageländer erstellen. Sie können auf einer ebenen Fläche montiert werden.	Die Geländerschuhe eignen sich hervorragend für Außen- und Innentreppen. Sie decken problemlos einen unschönen nackten Pfostenanker ab und verbessern so das moderne Aussehen Ihres Geländers erheblich.

Die Geländerschuhe passen für die meisten Geländerrahmen. Verwenden Sie sie, um Ihre zu schützen Deck vor Beschädigungen. Sie können die Richtung um 180 Grad nach Ihren Bedürfnissen anpassen.	Die eisernen Baluster-Drehschuhe werden mit einer Stellschraube geliefert. Vorgebohrte Löcher in den Baluster-Schuhen lassen sich einfach mit den mitgelieferten Schrauben an der Schiene anschrauben und ermöglichen eine schnelle und einfache Installation .	den Geländerschuhen können Sie ein wunderschönes Terrassen- oder Verandageländer erstellen. Sie können auf jeder Oberfläche (flach oder schräg) montiert werden.

Adresse: Baoshanqu Shuangchenglu 803long 11hao 1602A-1609shi Shanghai
Importiert nach AUS: SIHAO PTY LTD . 1 ROKEVA STREETEASTWOOD NSW 2122 Australien
In die USA importiert: Sanven Technology Ltd. Suite 250, 9166 Anaheim Place, Rancho Cucamonga, CA 91730

UK	REP

Pooledas Group Ltd
Unit 5 Albert Edward House, The Pavilions Preston, United Kingdom

EC	**REP**

SHUNSHUN GmbH
Römeräcker 9 Z2021, 76351
Linkenheim-Hochstetten, Germany

VEVOR®

TOUGH TOOLS, HALF PRICE

Zertifikat für technischen Support und E-Garantie

www.vevor.com/support

In China hergestellt

VEVOR®

TOUGH TOOLS, HALF PRICE

Supporto tecnico e certificato di garanzia elettronica www.vevor.com/support

SCARPE DA RINGHIERA

MODELLO: LGXZ-0,5 pollici-P-50/LGXZ-0,5 pollici-X-50

We continue to be committed to provide you tools with competitive price.
"Save Half", "Half Price" or any other similar expressions used by us only represents an estimate of savings you might benefit from buying certain tools with us compared to the major top brands and does not necessarily mean to cover all categories of tools offered by us. You are kindly reminded to verify carefully when you are placing an order with us if you are actually saving half in comparison with the top major brands.

VEVOR®

TOUGH TOOLS, HALF PRICE

RAILING SHOES

MODELLO: LGXZ-0,5 pollici-P-50 LGXZ-0,5 pollici-X-50

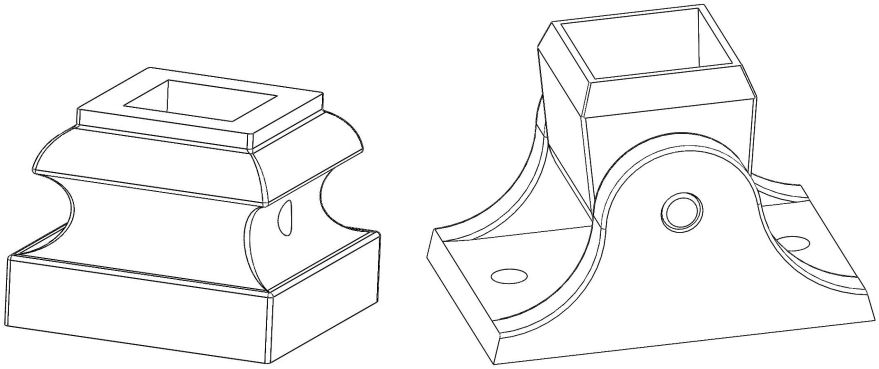

NEED HELP? CONTACT US!

Have product questions? Need technical support? Please feel free to contact us:

Technical Support and E-Warranty Certificate
www.vevor.com/support

This is the original instruction, please read all manual instructions carefully before operating. VEVOR reserves a clear interpretation of our user manual. The appearance of the product shall be subject to the product you received. Please forgive us that we won't inform you again if there are any technology or software updates on our product.

AVVERTIMENTO:

1. Non permettere ai bambini di salire sull'unità. 2. Tenere lontani i bambini e gli animali domestici durante il montaggio.

PRECAUZIONI DI MONTAGGIO

1. Si prega di assemblare il prodotto attenendosi rigorosamente alle istruzioni. Un montaggio errato potrebbe essere pericoloso.
2. Indossare correttamente occhiali protettivi e guanti da lavoro durante il montaggio.
3. Non tentare di montare il prodotto quando ci si sente stanchi o sotto l'influenza di alcol, droghe o farmaci.
4. La capacità di carico e altri parametri del prodotto vengono applicati solo al prodotto correttamente e completamente assemblato.
5. Separare e contare tutte le parti e l'hardware.
6. Preparare il seguente strumento: cacciavite a croce.
7. Se si utilizzano utensili elettrici, fare attenzione a rallentare e fermarsi quando necessario.
8. Per il montaggio sono necessarie due persone.
9. Seguire solo gli usi previsti.

Salva l'istruzione.

Parametri del prodotto

Modello	**LGXZ-0,5 pollici-P-50**	**LGXZ-0,5 pollici-X-50**
Dimensione della pubblicazione	1/2 pollice	1/2 pollice
Dimensione interna	0,53 x 0,53 pollici	0,53 x 0,53 pollici
Numero di articoli	50 PZ	50 PZ

Colore	Nero	Nero

Istruzioni per l'installazione

Le scarpe per ringhiera sono dotate di una vite di fissaggio, i fori preforati sulle scarpe della balaustra si avvitano semplicemente alla guida con le viti fornite per rendere l'installazione facile e veloce.	Le scarpe per ringhiera creeranno per te una bellissima ringhiera per terrazza o veranda, possono essere montate su una superficie piana.	Le scarpe per ringhiera sono perfette per scale esterne o interne, coprono facilmente un poco attraente ancoraggio a palo nudo, migliorando notevolmente l'aspetto moderno delle tue ringhiere.
Le scarpe per	Le scarpe girevoli per	Le scarpe per

ringhiera si adattano alla maggior parte dei telai di ringhiera. Usali per proteggere il tuo ponte da eventuali danni. Puoi regolare la direzione di 180 gradi in base alle tue esigenze.	balaustra in ferro sono dotate di una vite di fissaggio, i fori preforati sulle scarpe per balaustra si avvitano semplicemente alla guida con le viti fornite per rendere l'installazione facile e veloce .	ringhiera creeranno per te una bellissima ringhiera per ponte o veranda, possono essere montate su qualsiasi superficie (piatta o inclinata).

Indirizzo: Baoshanqu Shuangchenglu 803long 11hao 1602A-1609shi Shanghai
Importato in AUS: SIHAO PTY LTD . 1 ROKEVA STREETEASTWOOD NSW 2122 Australia
Importato negli Stati Uniti: Sanven Technology Ltd. Suite 250, 9166 Anaheim Place, Rancho Cucamonga, CA 91730

UK REP	Pooledas Group Ltd Unit 5 Albert Edward House, The Pavilions Preston, United Kingdom
EC REP	SHUNSHUN GmbH Römeräcker 9 Z2021, 76351 Linkenheim-Hochstetten, Germany

VEVOR®

TOUGH TOOLS, HALF PRICE

Supporto tecnico e certificato di garanzia elettronica

www.vevor.com/support

Made in China

VEVOR®

TOUGH TOOLS, HALF PRICE

Soporte técnico y certificado de garantía electrónica www.vevor.com/support

ZAPATOS DE BARANDILLA

MODELO: LGXZ-0.5in-P-50/LGXZ-0.5in-X-50

We continue to be committed to provide you tools with competitive price.
"Save Half", "Half Price" or any other similar expressions used by us only represents an estimate of savings you might benefit from buying certain tools with us compared to the major top brands and does not necessarily mean to cover all categories of tools offered by us. You are kindly reminded to verify carefully when you are placing an order with us if you are actually saving half in comparison with the top major brands.

VEVOR®

TOUGH TOOLS, HALF PRICE

RAILING SHOES

MODELO: LGXZ-0.5in-P-50 LGXZ-0.5in-X-50

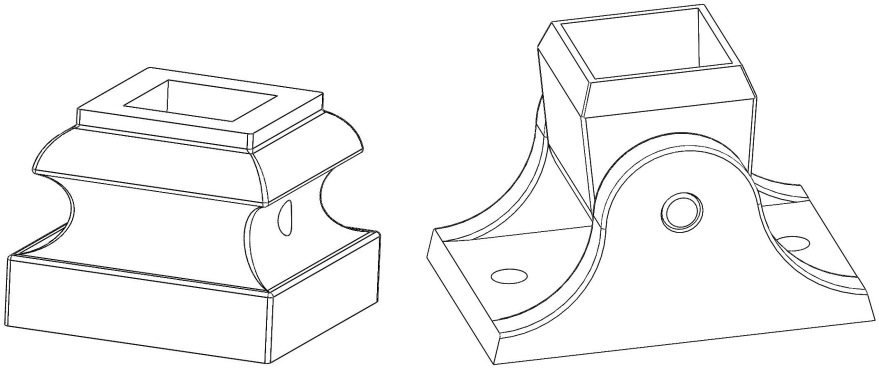

NEED HELP? CONTACT US!

Have product questions? Need technical support? Please feel free to contact us:

Technical Support and E-Warranty Certificate
www.vevor.com/support

This is the original instruction, please read all manual instructions carefully before operating. VEVOR reserves a clear interpretation of our user manual. The appearance of the product shall be subject to the product you received. Please forgive us that we won't inform you again if there are any technology or software updates on our product.

ADVERTENCIA:

1. No permita que los niños se suban a la unidad. 2. Mantenga alejados a los niños y las mascotas durante el montaje.

PRECAUCIONES DE MONTAJE

1. Ensamble el producto estrictamente de acuerdo con las instrucciones. El montaje incorrecto podría ser peligroso.
2. Utilice gafas de seguridad y guantes de trabajo correctamente durante el montaje.
3. No intente montar el producto cuando se sienta cansado o bajo la influencia del alcohol, drogas o medicamentos.
4. La capacidad de carga y otros parámetros del producto se aplican únicamente al producto ensamblado de manera adecuada y completa.
5. Separe y cuente todas las piezas y herrajes.
6. Prepare la siguiente herramienta: Destornillador Philips.
7. Si utiliza herramientas eléctricas, tenga cuidado de reducir la velocidad y detenerse cuando sea necesario.
8. Para el montaje se necesitan dos personas.
9. Siga únicamente los usos previstos.

Guarde la instrucción.

Parámetros del producto

Modelo	**LGXZ-0.5in-P-50**	**LGXZ-0.5in-X-50**
Tamaño de la publicación	1/2 pulgada	1/2 pulgada
Tamaño interior	0,53x0,53 pulgadas	0,53x0,53 pulgadas
Número de items	50 PCS	50 PCS
Color	Negro	Negro

Instrucciones de instalación

Las zapatas de barandilla vienen con un tornillo de fijación, los orificios pretaladrados en las zapatas de balaustre simplemente se atornillan al riel con los tornillos provistos para que la instalación sea rápida y fácil.	Las zapatas de barandilla crearán una hermosa barandilla de terraza o porche para usted, se pueden montar en una superficie plana.	Los zapatos de barandilla son ideales para escaleras interiores o exteriores, cubren fácilmente un anclaje de poste desnudo poco atractivo y realzan en gran medida el aspecto moderno de sus barandillas.
Las zapatas de barandilla se adaptan a la mayoría de los marcos de barandilla.	Las zapatas giratorias del balaustre de hierro	Las zapatas de barandilla crearán una

Uselos para proteger su cubierta contra daños. Puedes ajustar la dirección 180 grados según tus necesidades.	vienen con un tornillo de fijación, los orificios pretaladrados en las zapatas del balaustre simplemente se atornillan al riel con los tornillos proporcionados para que la instalación sea rápida y fácil .	hermosa barandilla de terraza o porche para usted, se pueden montar en cualquier superficie (plana o inclinada).

Dirección: Baoshanqu Shuangchenglu 803long 11hao 1602A-1609shi Shanghai
Importado a AUS: SIHAO PTY LTD . 1 ROKEVA STREET ASTWOOD NSW 2122 Australia
Importado a EE. UU.: Sanven Technology Ltd. Suite 250, 9166 Anaheim Place, Rancho Cucamonga, CA 91730

UK REP	Pooledas Group Ltd Unit 5 Albert Edward House, The Pavilions Preston, United Kingdom
EC REP	SHUNSHUN GmbH Römeräcker 9 Z2021, 76351 Linkenheim-Hochstetten, Germany

VEVOR®

TOUGH TOOLS, HALF PRICE

Soporte técnico y certificado de garantía electrónica

www.vevor.com/support

Hecho en china

VEVOR®

TOUGH TOOLS, HALF PRICE

Wsparcie techniczne i certyfikat e-gwarancji www.vevor.com/support

BUTY BALUSTRADOWE

MODEL: LGXZ-0,5 cala-P-50/LGXZ-0,5 cala-X-50

We continue to be committed to provide you tools with competitive price.
"Save Half", "Half Price" or any other similar expressions used by us only represents an estimate of savings you might benefit from buying certain tools with us compared to the major top brands and does not necessarily mean to cover all categories of tools offered by us. You are kindly reminded to verify carefully when you are placing an order with us if you are actually saving half in comparison with the top major brands.

VEVOR®

TOUGH TOOLS, HALF PRICE

RAILING SHOES

MODEL: LGXZ-0,5 cala-P-50 LGXZ-0,5 cala-X-50

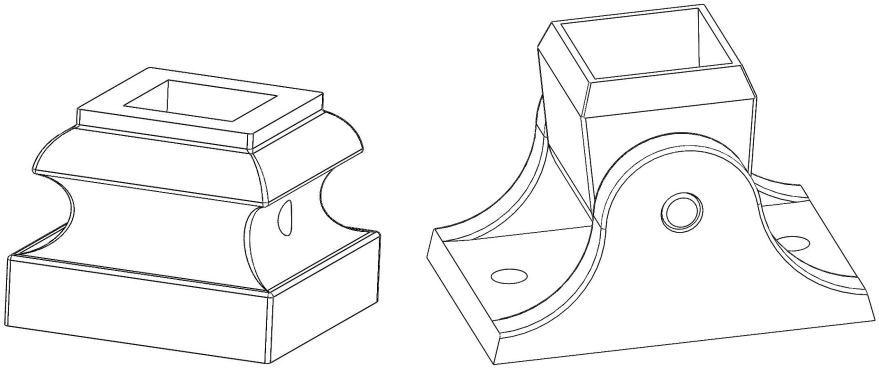

NEED HELP? CONTACT US!

Have product questions? Need technical support? Please feel free to contact us:

Technical Support and E-Warranty Certificate
www.vevor.com/support

This is the original instruction, please read all manual instructions carefully before operating. VEVOR reserves a clear interpretation of our user manual. The appearance of the product shall be subject to the product you received. Please forgive us that we won't inform you again if there are any technology or software updates on our product.

OSTRZEŻENIE:

1. Nie pozwalaj dzieciom wspinać się na urządzenie. 2. Podczas montażu trzymaj dzieci i zwierzęta z daleka.

ŚRODKI OSTROŻNOŚCI PRZY MONTAŻU

1. Prosimy o złożenie produktu ściśle według instrukcji. Nieprawidłowy montaż może być niebezpieczny.
2. Podczas montażu należy nosić okulary ochronne i rękawice robocze.
3. Nie przystępuj do składania produktu będąc zmęczonym, pod wpływem alkoholu, narkotyków lub leków.
4. Nośność i inne parametry produktu odnoszą się wyłącznie do produktu prawidłowo i całkowicie zmontowanego.
5. Oddziel i policz wszystkie części i osprzęt.
6. Przygotuj następujące narzędzie: Śrubokręt Philips.
7. Jeśli korzystasz z elektronarzędzi, pamiętaj, aby zwolnić i zatrzymać się, jeśli zajdzie taka potrzeba.
8. Do montażu potrzebne są dwie osoby.
9. Postępuj zgodnie z przeznaczeniem.

Zapisz instrukcję.

Parametry produktu

Model	**LGXZ-0,5 cala-P-50**	**LGXZ-0,5 cala-X-50**
Rozmiar postu	1/2 cala	1/2 cala
Wewnętrzny rozmiar	0,53 x 0,53 cala	0,53 x 0,53 cala
Liczba przedmiotów	50 SZT	50 SZT
Kolor	Czarny	Czarny

Instrukcje Instalacji

Buty balustrad są wyposażone w śrubę ustalającą. Wstępnie wywiercone otwory w stopach tralek wystarczy przykręcić do szyny za pomocą dostarczonych śrub, dzięki czemu montaż jest szybki i łatwy.	Buty balustradowe stworzą dla Ciebie piękną balustradę tarasu lub werandy. Można je zamontować na płaskiej powierzchni.	Buty balustradowe doskonale nadają się do schodów zewnętrznych lub wewnętrznych, łatwo zakrywają nieatrakcyjną gołą kotwę słupkową, znacznie poprawiając nowoczesny wygląd balustrad.
Buty balustrad pasują do większości ram balustrad. Użyj ich, aby chronić swoje pokład przed	Obrotowe stopki tralek żelaznych są wyposażone w śrubę	Buty balustradowe stworzą dla Ciebie piękną balustradę

uszkodzeniami. Kierunek możesz regulować o 180 stopni w zależności od potrzeb.	ustalającą, a wstępnie wywiercone otwory w stopach tralek wystarczy przykręcić do szyny za pomocą dostarczonych śrub, dzięki czemu montaż jest szybki i łatwy .	tarasu lub werandy. Można je zamontować na dowolnej powierzchni (płaskiej lub skośnej).

Adres: Baoshanqu Shuangchenglu 803long 11hao 1602A-1609shi Szanghaj
Import do AUS: SIHAO PTY LTD . 1 ROKEVA STREETEASTWOOD NSW 2122 Australia
Import do USA: Sanven Technology Ltd. Suite 250, 9166 Anaheim Place, Rancho Cucamonga, CA 91730

UK REP	Pooledas Group Ltd Unit 5 Albert Edward House, The Pavilions Preston, United Kingdom
EC REP	SHUNSHUN GmbH Römeräcker 9 Z2021, 76351 Linkenheim-Hochstetten, Germany

VEVOR®

TOUGH TOOLS, HALF PRICE

Wsparcie techniczne i certyfikat e-gwarancji

www.vevor.com/support

Wyprodukowano w Chinach

VEVOR®

TOUGH TOOLS, HALF PRICE

Technische ondersteuning en e-garantiecertificaat www.vevor.com/support

RELING SCHOENEN

MODEL: LGXZ-0,5 inch-P-50/LGXZ-0,5 inch-X-50

We continue to be committed to provide you tools with competitive price.
"Save Half", "Half Price" or any other similar expressions used by us only represents an estimate of savings you might benefit from buying certain tools with us compared to the major top brands and does not necessarily mean to cover all categories of tools offered by us. You are kindly reminded to verify carefully when you are placing an order with us if you are actually saving half in comparison with the top major brands.

VEVOR®

TOUGH TOOLS, HALF PRICE

RAILING SHOES

MODEL: LGXZ-0,5 inch-P-50 LGXZ-0,5 inch-X-50

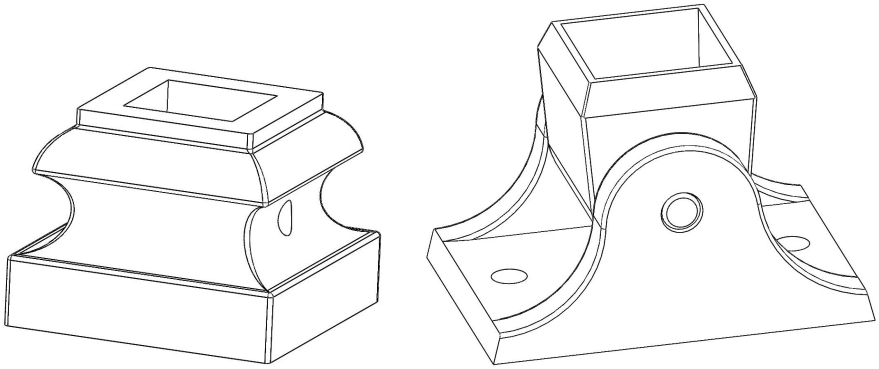

NEED HELP? CONTACT US!

Have product questions? Need technical support? Please feel free to contact us:

Technical Support and E-Warranty Certificate
www.vevor.com/support

This is the original instruction, please read all manual instructions carefully before operating. VEVOR reserves a clear interpretation of our user manual. The appearance of the product shall be subject to the product you received. Please forgive us that we won't inform you again if there are any technology or software updates on our product.

WAARSCHUWING:

1. Laat kinderen niet op het apparaat klimmen. 2. Houd kinderen en huisdieren tijdens de montage uit de buurt.

MONTAGEVOORZORGSMAATREGELEN

1. Monteer het product strikt volgens de instructies. Een onjuiste montage kan gevaarlijk zijn.
2. Draag tijdens de montage een veiligheidsbril en werkhandschoenen.
3. Probeer het product niet in elkaar te zetten als u zich moe voelt of onder invloed bent van alcohol, drugs of medicijnen.
4. Draagvermogen en andere productparameters gelden alleen voor het correct en volledig gemonteerde product.
5. Scheid en tel alle onderdelen en hardware.
6. Houd het volgende gereedschap gereed: kruiskopschroevendraaier.
7. Als u elektrisch gereedschap gebruikt, zorg er dan voor dat u langzamer gaat rijden en stopt wanneer dat nodig is.
8. Voor de montage zijn twee personen nodig.
9. Volg uitsluitend het beoogde gebruik.

Bewaar de instructie.

Productparameters

Model	LGXZ-0,5in-P-50	LGXZ-0,5in-X-50
Berichtgrootte	1/2 inch	1/2 inch
Binnenmaat	0,53 x 0,53 inch	0,53 x 0,53 inch
Aantal stuks	50 STUKS	50 STUKS
Kleur	Zwart	Zwart

Installatie instructies

De railingschoenen worden geleverd met een stelschroef. Voorgeboorde gaten in de balusterschoenen worden eenvoudig op de rail geschroefd met de meegeleverde schroeven, waardoor de installatie snel en eenvoudig is.	De railingschoenen creëren een prachtige terras- of verandarailing voor u, deze kan op een vlakke ondergrond worden gemonteerd.	De railingschoenen zijn ideaal voor buiten- of binnentrappen, bedekken eenvoudig een onaantrekkelijk kaal paalanker en verbeteren de moderne uitstraling van uw balustrades aanzienlijk.
De railingschoenen passen op de meeste railingframes. Gebruik ze om uw dek	De ijzeren baluster-zwenkschoen	Met de railingschoenen

tegen beschadiging. U kunt de richting 180 graden aanpassen aan uw behoeften.	en worden geleverd met een stelschroef. Voorgeboorde gaten in de balusterschoenen worden eenvoudig op de rail geschroefd met de meegeleverde schroeven, waardoor de installatie snel en eenvoudig is .	creëer je een prachtige terras- of verandaleuning. Hij kan op elk oppervlak worden gemonteerd (vlak of schuin).

Adres: Baoshanqu Shuangchenglu 803long 11hao 1602A-1609shi Shanghai
Geïmporteerd naar AUS: SIHAO PTY LTD . 1 ROKEVA STREETEASTWOOD NSW 2122 Australië
Geïmporteerd naar de VS: Sanven Technology Ltd. Suite 250, 9166 Anaheim Place, Rancho Cucamonga, CA 91730

UK REP	Pooledas Group Ltd Unit 5 Albert Edward House, The Pavilions Preston, United Kingdom
EC REP	SHUNSHUN GmbH Römeräcker 9 Z2021, 76351 Linkenheim-Hochstetten, Germany

VEVOR®

TOUGH TOOLS, HALF PRICE

Technische ondersteuning en e-garantiecertificaat

www.vevor.com/support

Gemaakt in China

VEVOR®

TOUGH TOOLS, HALF PRICE

Teknisk support och e-garanticertifikat www.vevor.com/support

RÄCKESKOR

MODELL: LGXZ-0.5in-P-50/LGXZ-0.5in-X-50

We continue to be committed to provide you tools with competitive price.
"Save Half", "Half Price" or any other similar expressions used by us only represents an estimate of savings you might benefit from buying certain tools with us compared to the major top brands and does not necessarily mean to cover all categories of tools offered by us. You are kindly reminded to verify carefully when you are placing an order with us if you are actually saving half in comparison with the top major brands.

VEVOR®

TOUGH TOOLS, HALF PRICE

RAILING SHOES

MODELL: LGXZ-0.5in-P-50 LGXZ-0.5in-X-50

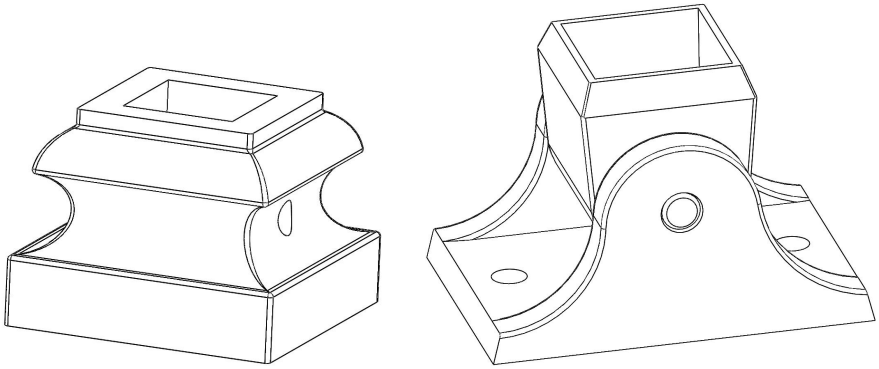

NEED HELP? CONTACT US!

Have product questions? Need technical support? Please feel free to contact us:

Technical Support and E-Warranty Certificate
www.vevor.com/support

This is the original instruction, please read all manual instructions carefully before operating. VEVOR reserves a clear interpretation of our user manual. The appearance of the product shall be subject to the product you received. Please forgive us that we won't inform you again if there are any technology or software updates on our product.

VARNING:

1. Låt inte barn klättra på enheten. 2. Håll barn och husdjur borta under monteringen.

FÖRSIKTIGHETSÅTGÄRDER FÖR MONTERING

1. Vänligen montera produkten i strikt enlighet med instruktionerna. Felaktig montering kan vara farligt.
2. Använd skyddsglasögon och arbetshandskar ordentligt under monteringen.
3. Försök inte att sätta ihop produkten när du känner dig trött eller är påverkad av alkohol, droger eller medicin.
4. Bärförmåga och andra produktparametrar tillämpas endast på den korrekt och färdigmonterade produkten.
5. Separera och räkna alla delar och hårdvara.
6. Förbered följande verktyg: Philips huvudskruvmejsel.
7. Om du använder elverktyg, var noga med att sakta ner och stanna vid behov.
8. Två personer krävs för montering.
9. Följ endast avsedd användning.

Spara instruktionen.

Produktparametrar

Modell	**LGXZ-0.5in-P-50**	**LGXZ-0.5in-X-50**
Poststorlek	1/2 tum	1/2 tum
Inre storlek	0,53 x 0,53 tum	0,53 x 0,53 tum
Antal artiklar	50 st	50 st
Färg	Svart	Svart

installations instruktioner

Räckesskorna kommer med en ställskruv, förborrade hål på balusterskorna skruvas helt enkelt fast på skenan med de medföljande skruvarna gör installationen snabb och enkel .	Räckesskorna kommer att skapa ett vackert däcks- eller verandaräcke för dig, det kan monteras på en plan yta.	Räckesskorna är perfekta för utomhus- eller inomhustrappor, täcker enkelt ett oattraktivt nakna stolpeankare, vilket avsevärt förbättrar det moderna utseendet på dina räcken .
Räckesskorna passar till de flesta räckesramar . Använd dem för att skydda din däck från	De svängbara balusterskorna i järn kommer med en	Räckesskorna kommer att skapa ett vackert däcks- eller

skada. Du kan justera riktningen 180 grader efter dina behov.	ställskruv, förborrade hål på balusterskorna skruvas helt enkelt fast på skenan med de medföljande skruvarna gör installationen snabb och enkel .	verandaräcke för dig, det kan monteras på vilken yta som helst (platt eller lutande) .

Adress: Baoshanqu Shuangchenglu 803long 11hao 1602A-1609shi Shanghai
Importerad till AUS: SIHAO PTY LTD . 1 ROKEVA STREETEASTWOOD NSW 2122 Australien
Importerad till USA: Sanven Technology Ltd. Suite 250, 9166 Anaheim Place, Rancho Cucamonga, CA 91730

UK REP	Pooledas Group Ltd Unit 5 Albert Edward House, The Pavilions Preston, United Kingdom
EC REP	SHUNSHUN GmbH Römeräcker 9 Z2021, 76351 Linkenheim-Hochstetten, Germany

VEVOR®

TOUGH TOOLS, HALF PRICE

Teknisk support och e-garanticertifikat

www.vevor.com/support

Tillverkad i Kina