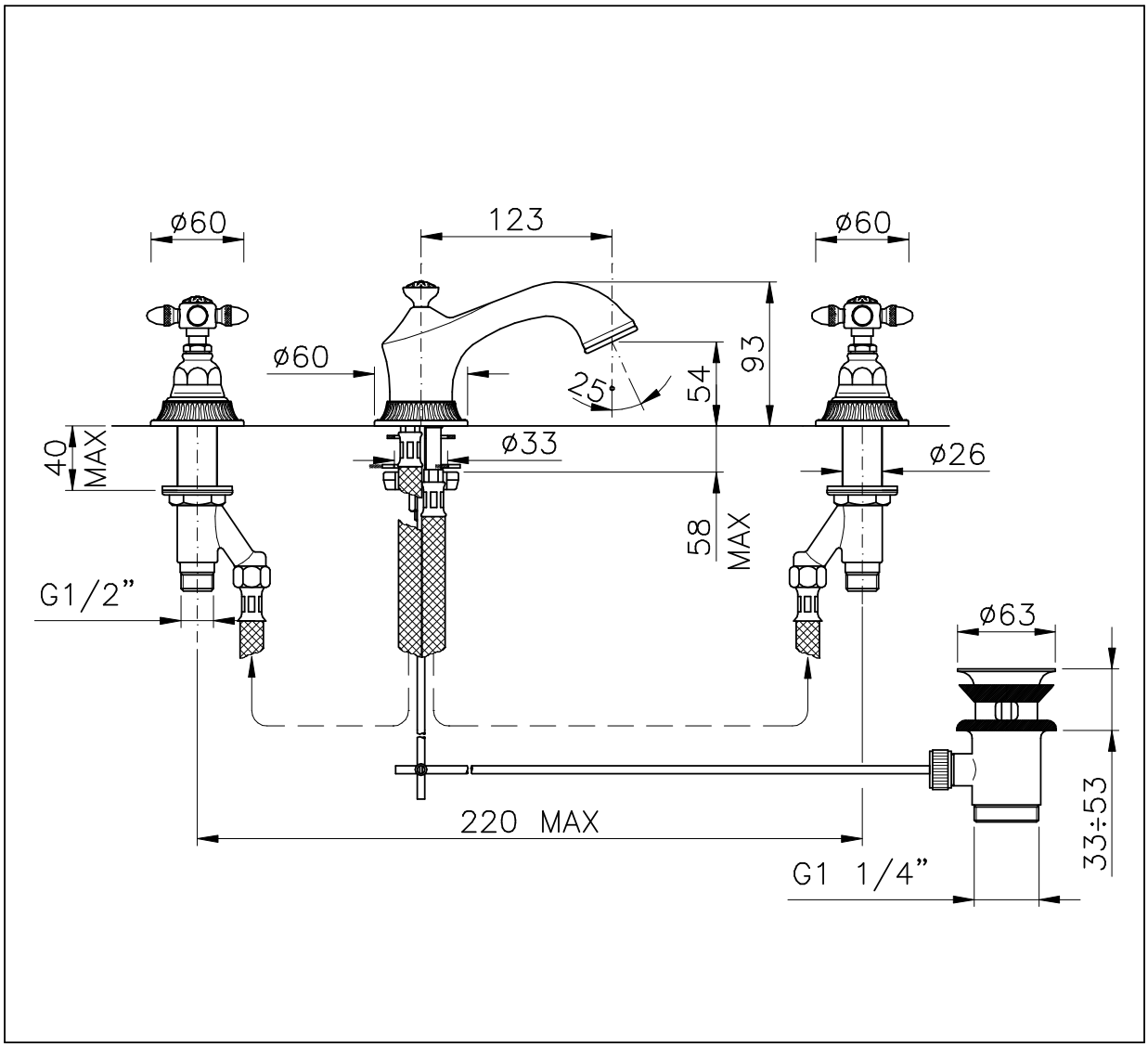# 950.1208.xx.xx (tech)