FireCatcher Camera

ACAP software version: V4.00.03
Hardware part number: 8000004

INSTALLATION MANUAL

Copyright Notice

Table of Contents

Safety and regulatory information

Definition of symbols

Hazard statements

Danger:	Indicates a hazardous situation which, if not avoided, *will* result in serious injury or death.
Warning:	Indicates a hazardous situation which, if not avoided, *could* result in serious injury or death.
Caution:	Indicates a hazardous situation which, if not avoided, *might* result in moderate or minor injury.
Notice:	Indicates a situation which, if not avoided, might result in property damage or in an undesirable result or state.

Others

Information:	Indicates a shortcut or any other useful indication.
Attention:	Indicates an element which requires extra attention, not necessarily a hazard

Safety information

Attention:

Please read this document carefully before installing the FireCatcher Camera. Configuration and usage are described in the FireCatcher Camera User Manual.
This document must be kept for future reference.
Before installation, check for eventual exterior damages. If the device presents exterior damages, do not install it and contact your supplier.

Notice:

Do not remove any label from the device.
Avoid exposing the FireCatcher Camera to shocks or heavy pressure.
Do not install the product on unstable poles, brackets, surfaces or walls.
Use only applicable tools when installing the FireCatcher Camera. Using excessive force with power tools could cause damage to the product.

Equipment modifications

This equipment must be installed and used in strict accordance with the instructions given in the user documentation. This equipment contains no user-serviceable components. Unauthorized equipment changes or modifications will invalidate all applicable regulatory certifications and approvals.
Do not attempt to repair the product yourself. Contact your supplier for service matters.

Attention: This equipment is shipped with the correct software version and settings pre-installed according to the desired product certifications. Unauthorized changes to the software version or the software settings will invalidate all applicable certifications and regulatory approvals.

Disposal and recycling

When this product has reached the end of its useful life, dispose of it according to local laws and regulations. For information about your nearest designated collection point, contact your local authority responsible for waste disposal. In accordance with local legislation, penalties may be applicable for incorrect disposal of this waste.

This symbol means that the product shall not be disposed of together with household or commercial waste. Directive 2012/19/EU on waste electrical and electronic equipment (WEEE) is applicable in the European Union member states. To prevent potential harm to human health and the environment, the product must be disposed of in an approved and environmentally safe recycling process. For information about your nearest designated collection point, contact your local authority responsible for waste disposal. Businesses should contact the product supplier for information about how to dispose of this product correctly.

This product complies with the requirements of Directive 2011/65/EU and 2015/863 on the restriction of the use of certain hazardous substances in electrical and electronic equipment (RoHS).

This product uses a 3.0 V BR2032 lithium battery as the power supply for its internal real-time clock (RTC). Under normal conditions this battery will last for a minimum of five years. Lithium coin cell 3.0 V batteries contain 1,2-dimethoxyethane; ethylene glycol dimethyl ether (EGDME), CAS no. 110-71-4.

Liability

Every care has been taken in the preparation of this document. Please inform Araani NV of any inaccuracies or omissions. Araani NV cannot be held responsible for damage caused by technical or typographical errors and reserves the right to make changes to the product and manuals without prior notice. Araani NV makes no warranty of any kind regarding the material contained within this document, including, but not limited to, the implied warranties of merchantability and fitness for a particular purpose. Araani NV shall not be liable nor responsible for incidental or consequential damages in connection with the furnishing, performance or use of this material. This product is only to be used for its intended purpose.

Trademark acknowledgements

AXIS COMMUNICATIONS and AXIS are registered trademarks or trademark applications of Axis AB in various jurisdictions. All other company names and products are trademarks or registered trademarks of their respective companies.

Ethernet, Torx, Microsoft, Milestone, Genetec and WWW are registered trademarks of the respective holders.

This product complies with the applicable CE marking directives and harmonized standards:

- Electromagnetic Compatibility (EMC) Directive 2014/30/EU.
- Low Voltage Directive (LVD) 2014/35/EU.
- Restriction of Hazardous Substances (RoHS) Directive 2011/65/EU and 2015/863, including any amendments, updates or replacements.

Contact and support

Should you require any technical assistance, please contact your Araani reseller. If your questions cannot be answered immediately, your reseller will forward your queries through the appropriate channels to ensure a rapid response.

If you are a reseller, please contact your direct contact person, or contact our support staff via support@araani.com.

Araani NV
Luipaardstraat 12
8500 Kortrijk (Belgium)
info@araani.com
http://www.araani.com
+32 (0)56 49 93 94

Introduction

About this manual

This manual describes the installation of Araani's FireCatcher Camera.

Please read this document carefully before installing the FireCatcher Camera.

The manual expects the reader to have some basic knowledge about electrical wiring and the use of cameras.

Please refer to the FireCatcher Camera User Manual for any information that is related to the configuration, usage, testing and maintenance of the FireCatcher Camera.

Attention:

Installation, fine-tuning, and final commissioning of Araani FireCatcher Camera is **only authorized by Araani Certified Engineers who attended the Araani Certified Partner Training.** Check sales@araani.com for more information on our partner program.

This manual only describes FireCatcher Camera as a Certified Fire Safety solution, connected to Fire Control and Indicating Equipment (CIE) acc. to local regulations. FireCatcher camera can also be integrated in a VMS-surveillance system, but documentation on this subject is out of the scope of this document. Check info@araani.com for more information.

Product Overview

Product description

FireCatcher Camera is a Video Fire Detector. Its primary functionality is triggering an alarm if it recognizes smoke or flames.

The FireCatcher Camera is intended to be connected to the fire alarm control panel to generate audible and/or visual alarms if smoke or flames are detected in the field of view. As a comfort solution, the FireCatcher Camera can be connected via the LAN to a Video Management System for visual monitoring and verification.

Built-in tamper detection, image quality control and activity monitoring contribute to a fail-safe and reliable detection.

Product elements

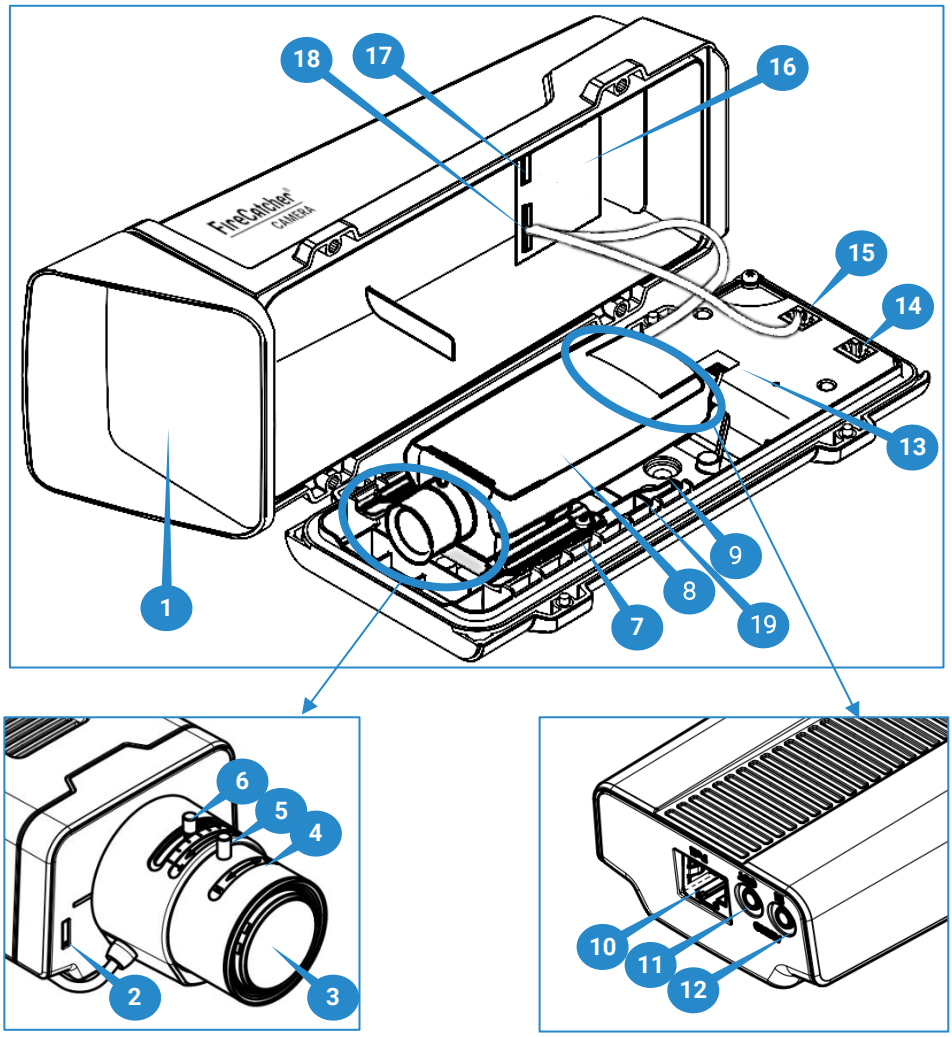

#	Name	Function
1	Window	Transparent window in front of lens. This part may require regular cleaning to guarantee proper image quality.
2	Status LED	See table below.
3	Lens	Varifocal lens.
4	Focus ring	Turn to adjust focus.
5	Lock screw for focus ring	Fix after adjusting focus.
6	Zoom puller	Turn to adjust zoom.
7	Heater	Maintains unit temperature.
8	Camera unit	Contains all camera electronics.
9	Cable gasket M20 (x2)	IP 66 entry for the power/alarm cable and Ethernet cable.
10	Ethernet connector	Connect external network cable to this connector.
11	Audio out	Not used.
12	Audio in	Not used.
13	Heater connector	This connector is linked to the heater. Do not use or modify this connection.
14	Housing power input connector	Connect external power wires from the power/alarm cable to this connector.

15	Housing power output connector	This connector is linked to the interface board power input. Do not use or modify this connection.
16	Interface board	Interface board and alarm outputs.
17	Interface bord I/O connector	Connect external alarm wires from the power/alarm cable to this connector.
18	Interface board power + RS485 connector	This connector is linked to the housing power output and to the camera serial communications and power input. Do not use or modify this connection.
19	Desiccant bag	Desiccant bag to prevent internal condensation.

Status LED behavior

Status LED	Indication
Unlit	Connection and normal operation.
Green	Steady green for 10 seconds for normal operation after start-up completed.
Amber	Steady during start-up. Flashes during firmware upgrade or reset to factory default.
Amber / Red	Flashes amber/red if network connection is unavailable or lost.
Red	Firmware upgrade failure.

Installing the FireCatcher Camera

Required tools

Torx tools for opening and assembling the camera are included with the FireCatcher Camera.

Additional tools and materials may be required.

- Generic electrical tools:
  - Wire cutter
  - Wire stripper
  - Standard & Philips screwdrivers
- For fixing the wall mount bracket to the wall:
  - 4 x Screw (max 9 mm), washers and wall plugs
  - Drill
  - Spirit level

Power requirements

MAIN POWER SOURCE REQUIREMENT

In normal room temperature conditions (T=20°C), maximum power consumption P_{max} = 6,23 W, corresponding with a current I_{max} = 0,26 A at 24 V. Average consumption is P_{mean} = 6,11 W, corresponding with a current I_{mean} = 0,25 A at 24 V.

In extreme outdoor conditions (T= -40°C), maximum power consumption P_{max} = 17,56 W, corresponding with a current I_{max} = 0,73 A at 24 V. Average consumption is P_{mean} = 12,17 W, corresponding with a current I_{mean} = 0,51 A at 24 V.

⚠ **Notice:** Do not use Power over Ethernet to feed the FireCatcher Camera.

STANDBY POWER BATTERY CALCULATION

Calculation method: EN54-4:1998 (*Fire detection and fire alarm systems — Part 4: Power supply equipment*) defines the need for standby power supply with rechargeable battery of a fire detection system. EN54-14 (*Fire detection and fire alarm systems — Part 14: Guidelines for planning, design, installation, commissioning, use and maintenance*) recommends a battery standby capacity of 24 hours for continuously monitored systems and 72 hours for non-continuously monitored systems. BS 5839-1:2017(*Fire detection and fire alarm systems for buildings — Part 1: Code of practice for system design, installation, commissioning and maintenance*) further introduces an ageing factor of 1,25 that allows for a battery degradation of 5% over 4 years. The standby time can be reduced to 6 hours for certain categories if an emergency generator is present.

Per average consumption information above, this results in a required battery capacity per camera as follows.

	Standby time (hours)	6	24	72
T = 20°C	Battery capacity (Ah)	1,9	7,6	22,9
T = -40°C	Battery capacity (Ah)	3,8	15,2	45,6

Cabling

The FireCatcher Camera supports 2 entry cables:

- Combined power + alarm cable: FireCatcher Camera supports the use of conventional multi-core fire alarm cable e.g. DIN VDE 0815 telecommunications cable.
- Ethernet cable: standard 8-wire Ethernet cable. Araani recommends using a shielded network cable (STP) of category CAT5e or higher.

Attention : The ethernet cable SHOULD NEVER BE CONNECTED to a PoE switch port!

Attention: for the French market, the combined power- and alarm cable should not exceed 3 meters and be mechanically protected till the junction box.

The camera cable gaskets support cables with outer diameter between 5 and 9,5 mm (0,2 - 0,4 inch).

The power and alarm connectors support stranded and solid wires with diameter up to maximum 1,5 mm².

The required number of conductors for the power + alarm cable depends on the type of connection to the fire control panel.

- One conductor pair is required for power.
- Alarm and Fault signals. In most cases, each require a pair of conductors. Some I/O modules allow to combine these signals on a single pair of wires through the use of termination resistors. Consult your Fire Alarm Control Panel documentation to verify what is supported.
- Optionally one pair of conductors for additional signals that can be used on your Fire Alarm Control Panel. e.g. separate smoke and flame alarm or supervisory signal.

The power drop at the FireCatcher Camera should not exceed 10%. With a supply voltage of 24 VDC and a maximum power consumption per above, this limits the length of copper wire to these values:

Wire conductor gauge	0,75 mm² 18 AWG	1 mm 17 AWG	1,5 mm² 16 AWG
Maximum cable length at 20°C	200 m	270 m	400 m
Maximum cable length at -40°C	70 m	95 m	145 m

Attention : For installations that are connected to the fire alarm control panel, the power/alarm cabling should be compliant to local fire regulations e.g. fire-resistant or enhanced fire-resisting cable class, local codes of practice, colour codes, etc. and compliant with the fire control equipment manufacturer specifications or guidelines. Regulatory requirements and manufacturer guidelines supersede any further information. Refer to the related standards and documentation for details.

Camera positioning

SITE ASSESSMENT

To maximize protection, it is required to perform a site survey before installing the FireCatcher Camera. This allows you to identify risk areas and take those into account when positioning new cameras.

- Define the hot spots:
  What is the type of risk? Can the fire start at any location in the field of view or is there a specific risk related to machinery or a critical part in the scene?
- For smoke detection, estimate the smoke flow:
  Estimate where smoke may flow in case of an incident. Based on this estimation, preferably select a camera position that will visualize the smoke in the fastest and largest way. Focus on where the smoke will flow, rather than the risk area.
  Will smoke ascend to the ceiling or will there be stratification?
  Will smoke be dispersed over the whole area by ventilation or forced air flow?
- System redundancy:
  To guarantee full coverage on very large areas, multiple cameras will be needed. To avoid blind spots, make sure the field of views of the cameras overlap with a minimum of 20%.

ENVIRONMENTAL REQUIREMENTS

The sensitivity and performance of the FireCatcher Camera system is impacted partially by the environment it is operating in. Consider these basic guidelines with each installation for optimal performance:

Light:
For smoke detection, there should be sufficient light 24/7 in the entire field of view.

As a general guideline, smoke detection requires an illuminance of at least 1 lux.

Dark / bright spots:
Avoid the combination of very dark and extremely bright spots in the field of view. This will stress the dynamic range of the camera and make the image quality unstable, resulting in an overall darker image.

Maximum illumination ratio Bright spots / Low spots (in lux) is 1000 : 1

This means that if spots of direct sunlight of about 50 000 lx are expected, the minimum lux level in the shadow should be increased to at least 50 lux instead of 1 lux.

General guidelines:

For indoor cameras:

- Do not point the camera to exterior windows or portals.
- Avoid the presence of direct light sources in the field of view. If this cannot be avoided, adjust the detection zone to mask these areas out.

For outdoor cameras:

- Avoid east or west orientation, where the sun gets low and potentially may blind the camera.
- Avoid having horizon in the field of view of the camera at all.

Contrast:
There should be sufficient contrast in the field of view. Do not point the camera to white walls or large areas without contrast.

Sun:
Avoid direct sunlight or bright reflections of the sun falling straight into the lens.

False triggers:

Avoid sources of dust, damp, or smoke (e.g., from operating machines) in the field of view during normal operation. These could lead to recurring false detections.

Outdoor:
Outdoor conditions are more susceptible to false alarms. For outdoor applications, try to control and stabilize environmental conditions as much as possible e.g., protecting the scene from varying weather conditions, apply stable lighting conditions, apply or extend a weather shield extension, etc.

To further optimize the detection or to avoid false triggering of alarms e.g., due to very dynamic or badly illuminated zones in the field of view, the detection can be restricted to certain zones in the field of view. These zones can be drawn in the app configuration screen in the browser itself. Refer to the user manual on how to configure detection zones.

By default, the detection area is the whole field of view. If detection zones are defined, this will override the default and detection will only occur only in the defined zones.

Adjust the sensitivity parameters of FireCatcher Camera if problems persist.

CAMERA ALIGNMENT / FIELD OF VIEW

Based on the site assessment, preferably select a camera position that maximizes the visualization of potential smoke or flames.

- With default settings, the FireCatcher Camera algorithm will trigger alarm when smoke covers approximately 3 % of the field of view during 5 seconds at the same location in the field of view.
- With default settings, the FireCatcher Camera algorithm will trigger alarm when the flame size exceeds 0,04% of the field of view and the flame is detected for at least 5 seconds at the same location in the field of view.

For a camera with 1920 x 1080 resolution, 3 % is a zone of 249 x 249 pixels and 0,04% is a zone of 28 x 28 pixels.

As a result: the smaller the field of view, the higher the sensitivity; and the further away from the camera, the lower the sensitivity.

The minimum required coverage for smoke to be detected depends on the “smoke alarm minimum coverage” setting. The minimum required size for a flame to be detected depends on the “minimum flame size” setting. Refer to the FireCatcher Camera user manual for more information on configuring the detection sensitivity.

Below is a graphical representation of smoke and flame detection threshold for some common coverage settings on a 1920 x 1080 image, assuming a 1:2 aspect ratio of smoke clouds.

Also consider the environmental requirements described above when positioning the camera. In large areas, you may consider providing redundant coverage by adjacent cameras.

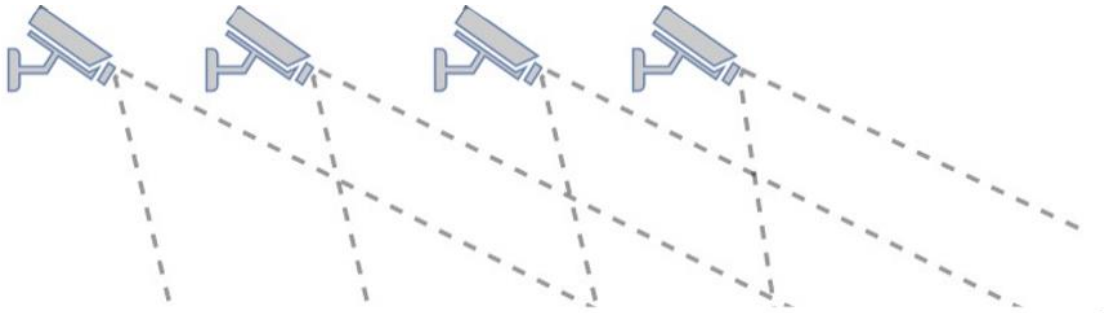

Cameras can be either wall- or pole mounted with a horizontal field of view or ceiling mounted with a more vertical field of view. The vertical view could be interesting in heigh spaces, depending on the nature of the space:

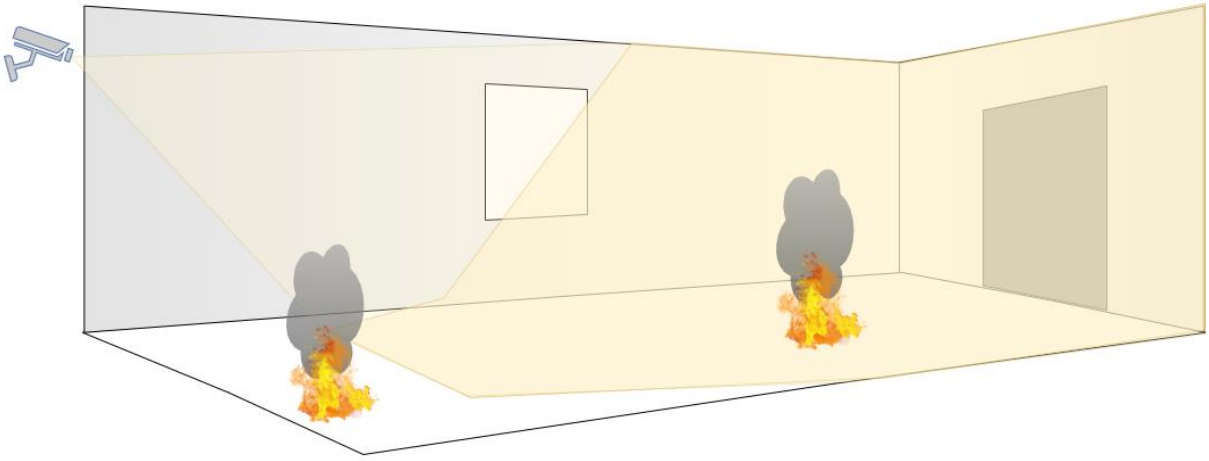

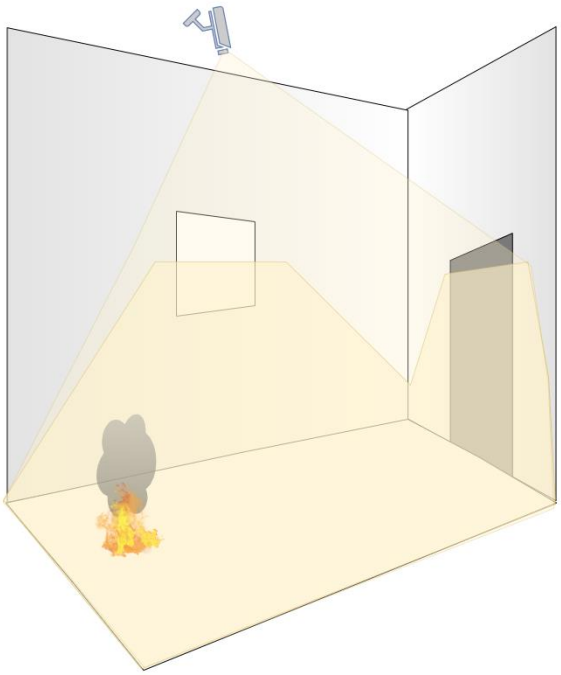

Information: Axis® provides a site designer tool on their website that assists in determining the field of view, based on lens type and focal length, mounting height, and distance in the scene. To use this tool for the FireCatcher Camera , select "P1375" as camera type, "included" as lens and "1920 x 1080" as resolution. See https://sitedesigner.axis.com/

Information: Axis® provides a lens calculator tool on their website that assists in determining the field of view, based on lens type and focal length, mounting height, and distance in the scene. To use this tool for the FireCatcher Camera , select "P1375" as camera type, "included" as lens and "1920 x 1080" as resolution. See https://www.axis.com/support/tools/find-and-compare-products/lens-calculator

Installation instructions

There are 3 main options to mount the camera, related to the possibilities of cable routing:

- Routing cables through the wall, through the mounting bracket to the camera body = **wall-feed cabling**.
- Routing cables from the bottom into the mounting bracket, through the mounting bracket to the camera body. This requires drilling a cable feed hole through a pre-stamped location on the mounting bracket = **bottom-feed cabling**.
- Routing cables from side or bottom through a **conduit box** (not included), into the camera bracket to the camera body.

Information: Araani has other options available for specific mounting conditions such as ceiling mount, corner mount, sunshields for outside mounting etc. Contact your supplier for more information on other mounting options.

BRACKET MOUNTING INSTRUCTIONS FOR WALL-FEED CABLING

Follow the steps below to install the FireCatcher Camera.

1 Mount the bracket 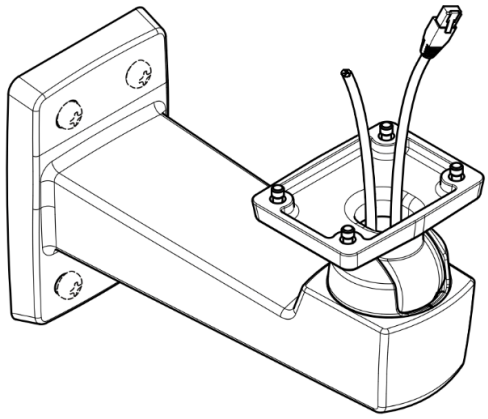	Fix the wall mount bracket against the wall by means of 4 screws and wall plugs, leading the power/outputs cable and the Ethernet cable through the bracket. Leave approximately 30 cm of cable above the bracket for ease of handling. The Ethernet RJ45 connector can be assembled before or after leading the Ethernet cable through the bracket. The power and alarm connectors need to be attached after leading the cable through the bracket. See further for connection instructions.

Proceed with camera body mounting.

BRACKET MOUNTING INSTRUCTIONS FOR BOTTOM-FEED CABLING

1 Drill cable feed hole 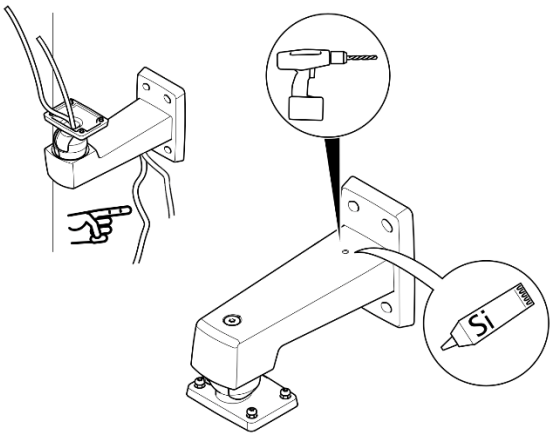	Drill a hole in the bottom of the bracket, large enough to fit your wiring. Do not forget to seal the hole with silicone after guiding the wires through, at the end of the installation.

2 Route cable 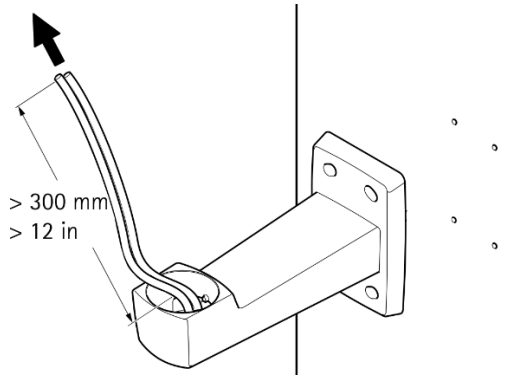 	Guide the cables through the hole in the bottom of the bracket, through the bracket. Leave at least 30 cm of wire for connection.

Proceed with camera body mounting.

BRACKET MOUNTING INSTRUCTIONS WITH CONDUIT BOX

Another way to feed the cables to the FireCatcher Camera without going through the mounting surface can be accomplished by using the Axis TQ1601-E conduit back box. The cables can be guided sideways in any direction through this box as illustrated below. The FireCatcher Camera is then further mounted on top of the conduit back box as described in the case with wall-feed cabling.

The conduit box can be purchased from your supplier as "Axis TQ1601-E conduit back box". See https://www.axis.com/products/axis-tq1601-e-conduit-back-box for more information on this product.

1 Mount the conduit box 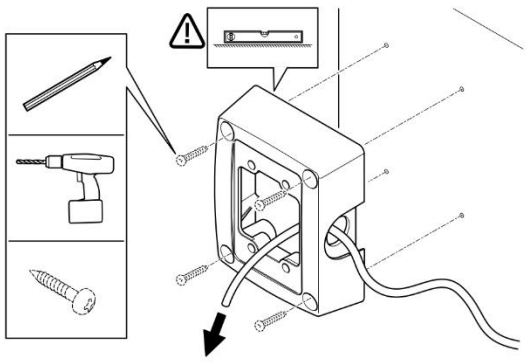	Mount the conduit back box to the wall as illustrated. Make sure the box is mounted horizontally by using a spirit level.

2 Route cabling and attach the mounting bracket 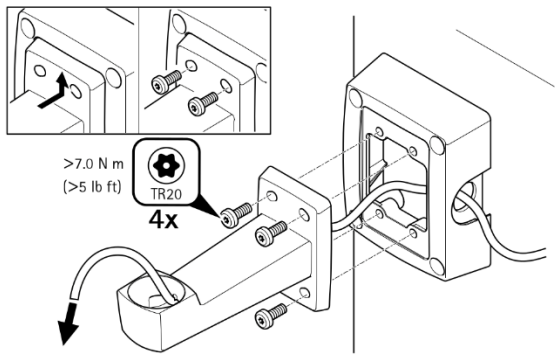 	Guide the cables through the mounting bracket and fix the bracket on top of the conduit box, using the included Torx screws.

Proceed with camera body mounting.

CAMERA BODY MOUNTING INSTRUCTIONS

1 Open the camera body 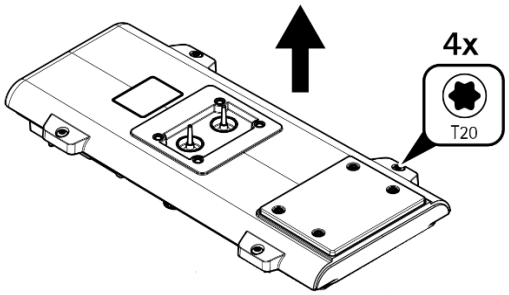 	Open the FireCatcher Camera by removing 4 Torx screws from the bottom.
2 Open cable sealing 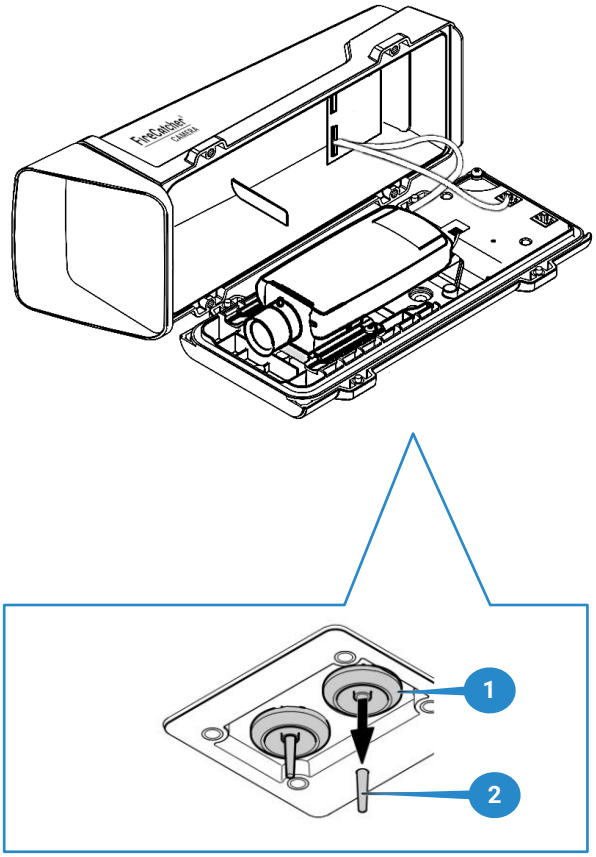 	Pull the two tabs ② from cable gaskets ① to lead the cables inside.

3 Route cable and fix camera body 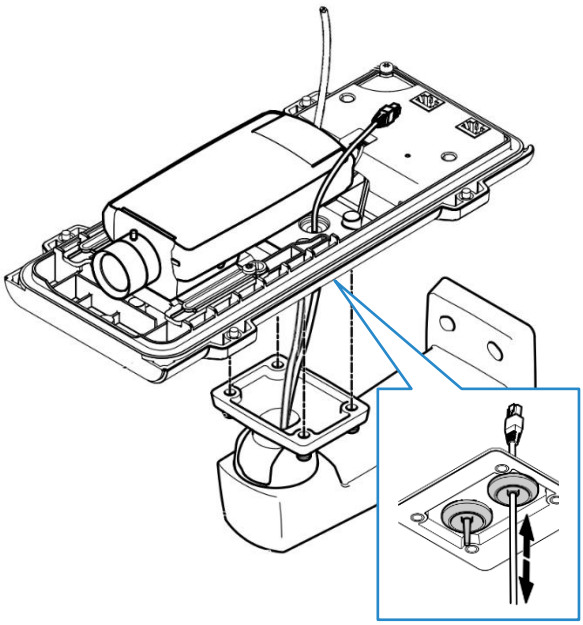 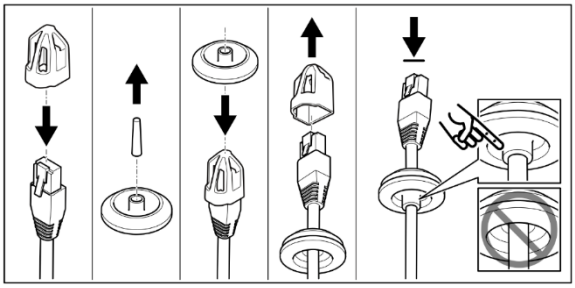	Lead the cables through the cable gaskets into the camera. Use the RJ45 cap as indicated if you need to enter the Ethernet cable with connector pre-attached. Make sure the cables are properly fitted through the gasket to avoid intrusion of water or moisture. Fix the bottom to the wall mount bracket (torque 2 Nm).

4 Connect Ethernet 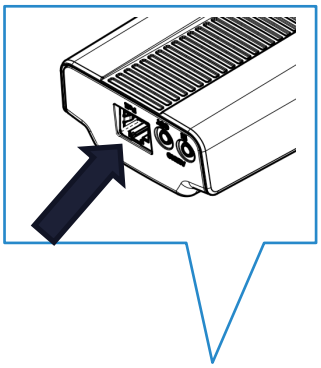 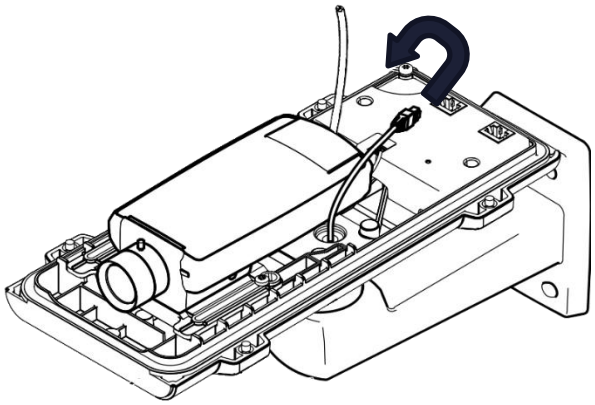	Insert the Ethernet cable in the corresponding RJ45 Ethernet connector on the back of the camera unit. **Attention:** The ethernet cable SHOULD NEVER BE CONNECTED to a PoE switch port!

5 Connect power and alarm wires

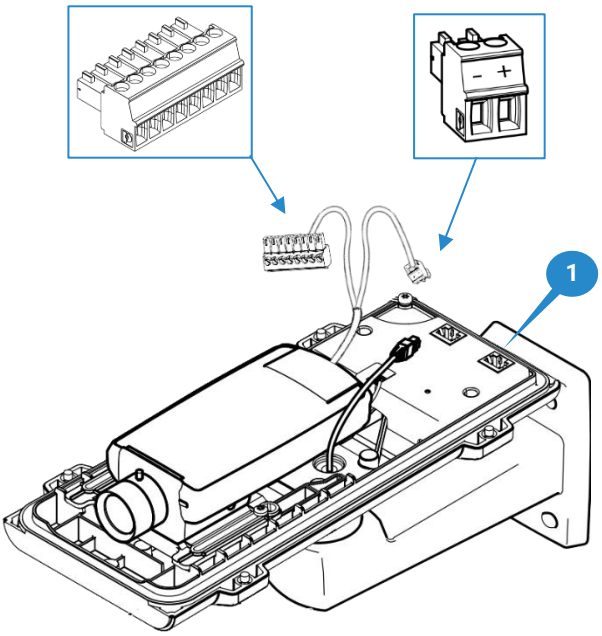

Strip the outer isolation of the power/alarm cable for about 15 cm.

Separate the 2 power wires from the alarm wires.

Attach the 2-pins power mating connector to the power wires and fit it to the power connector of the camera housing ①.

Attach the alarm wires from the power/alarm cable to the 8-pins mating connector of the interface board.

Attention: for the French market, the combined power- and alarm cable should not exceed 3 meters and be mechanically protected till the junction box.

Consult the connection diagram below for identification. Connector labels correspond to outputs as follows:

Consult the manual of your fire alarm control panel to determine the appropriate wiring. This may involve the use of resistors to combine alarm, fault and other signals.

Attach the 8-pin I/O connector to the interface board.

ALM = Output 1, default configuration = alarm (configurable) (Normally Open)

PRE = Output 2, default not used (configurable) (Normally Open)

FLT = Output 3, fixed fault (Normally Closed)

DIS = Output 4, default configuration = alarm (configurable) (Normally Open)

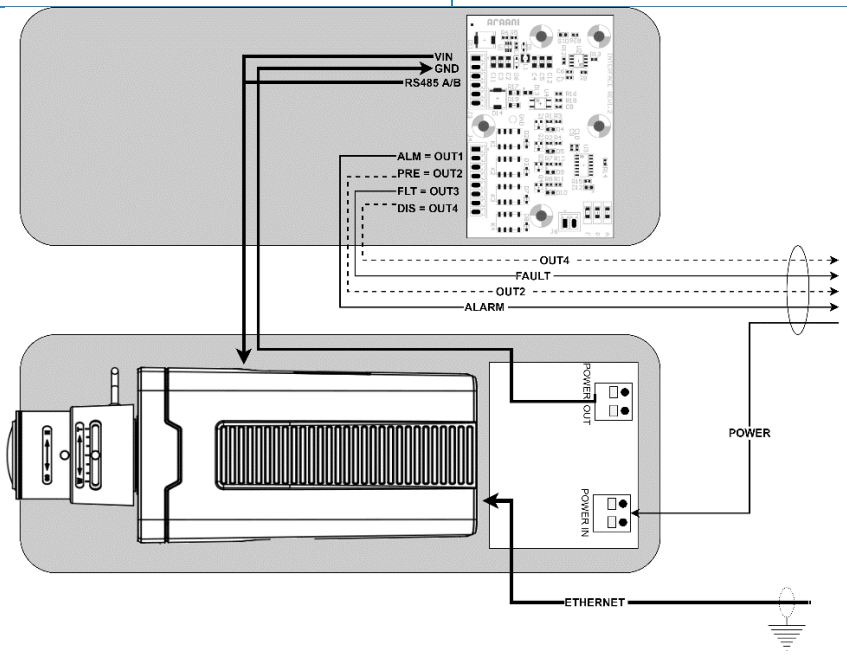

6 Align the camera	
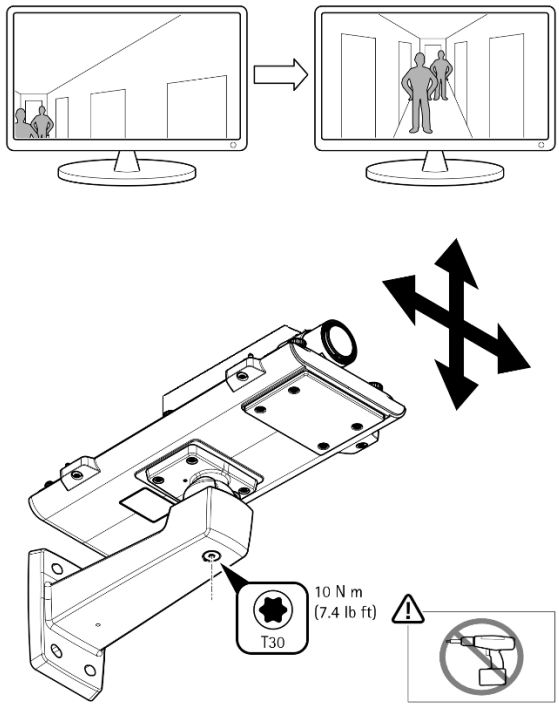	Align the FireCatcher Camera to the centre of the scene before fixing it to the bracket. Fix the bracket using Torx T30 bit. **Attention:** Pay attention not to apply excessive force. Do not use any automatic gear in order to avoid damaging it by excessive force. Refer to Viewing the camera stream on how to connect to the camera and see live video.

7 Adjust zoom and focus

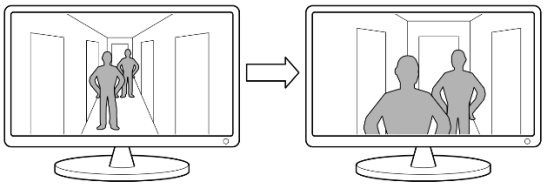

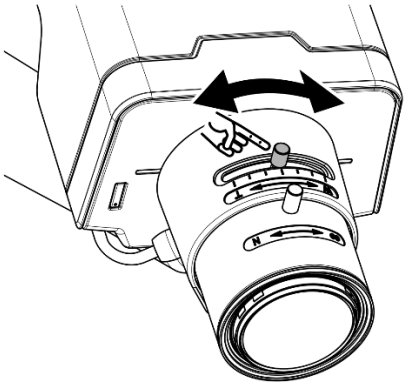

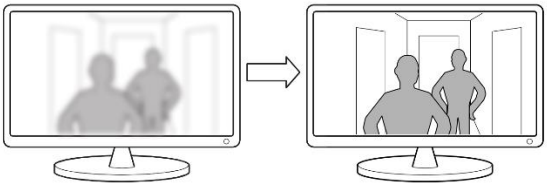

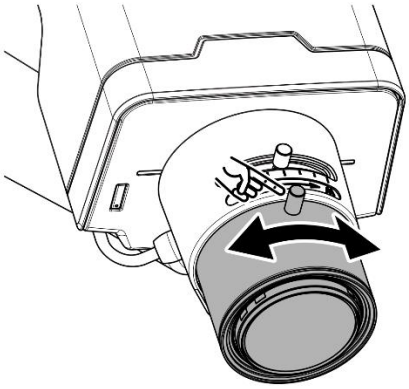

Unlock the zoom lock screw and focus lock screw.

Go to the camera web interface, section Image > Focus > Fine Tune and set the camera to the mechanical back-focus by clicking “Reset Focus” (for more information, see Fine-tuning focus)

Adjust zoom lens for optimal field of view.
Manually adjust the focus ring for best image

Tighten the zoom lock screw and the focus lock screw after adjusting. Make sure it is not defocused by the tightening action.

Focus can be fine-tuned in the camera web interface afterwards. See Fine-tuning focus

Attention: It is important that the mechanical back-focus is locked on a sharp view, because the automatic focus from within the web-interface is limited to a small range around the back-focus. If the back-focus is out of focus, it might be impossible to get a sharp focus with the automatic focus.

8 Mount the camera cover & remove protective film 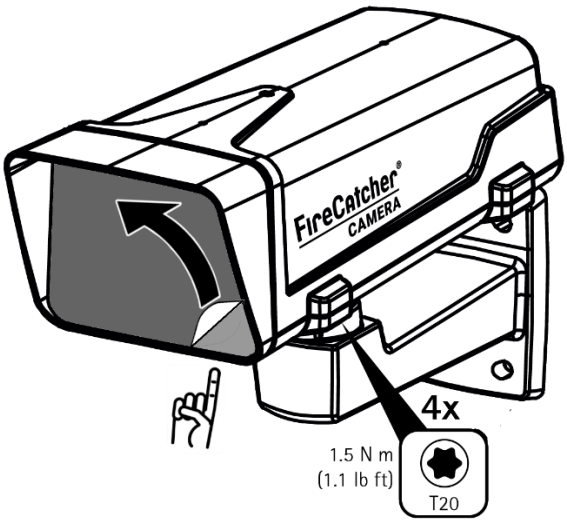	Reassemble the camera by attaching the cover with the 4 Torx screws. Pay attention not to squeeze the cables. Remove the adhesive protective film from the camera window.

Assigning an IP address with Axis device manager

By default, the FireCatcher Camera is configured to use DHCP. Axis Device Manager can be used to assign an IP address to the camera or to find out the IP address that was dynamically received by the camera on your network if a DHCP server is active. If you want to change the IP address to a fixed value, follow the steps below. Verify with your IT department what IP addresses are allowed to use.

1. Download the latest version of the Axis device manager from https://www.axis.com/support/tools/install-and-manage-systems/axis-device-manager. Run the installation program and follow the instructions on screen.

2. Make sure your FireCatcher Camera is powered up and connected to the network. Start Axis Device Manager on a Microsoft Windows computer that is on the same physical network as the cameras. The program will start and scan the network for cameras. All FireCatcher Cameras should appear in the "Add devices" dialog window in grey font with "Enter password" next to it. If your camera is not showing, verify network connections and power.

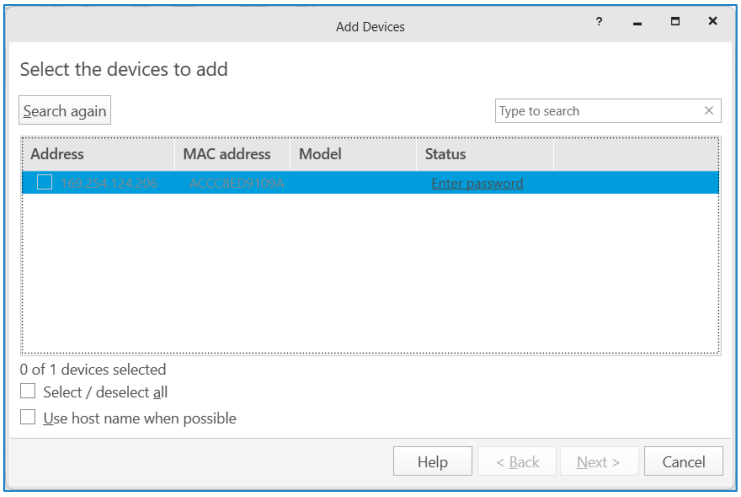

3. Find the new FireCatcher Camera in the camera list. Click "Enter password". A dialog box will appear that allow to enter the username and password for the FireCatcher Camera. Fill in:

   Username = administrator

   Password = as received. Only distribute to Araani Certified Engineers.

   Click "OK"

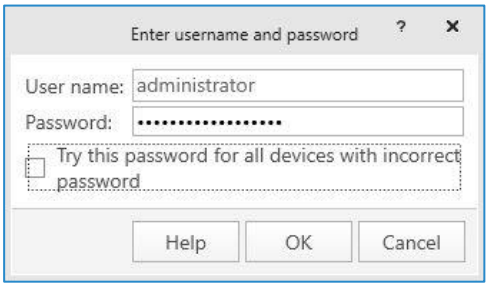

4. The camera will now appear in the "Add devices" window with model name "P-1375". Select the camera if not yet done so and click "Next".

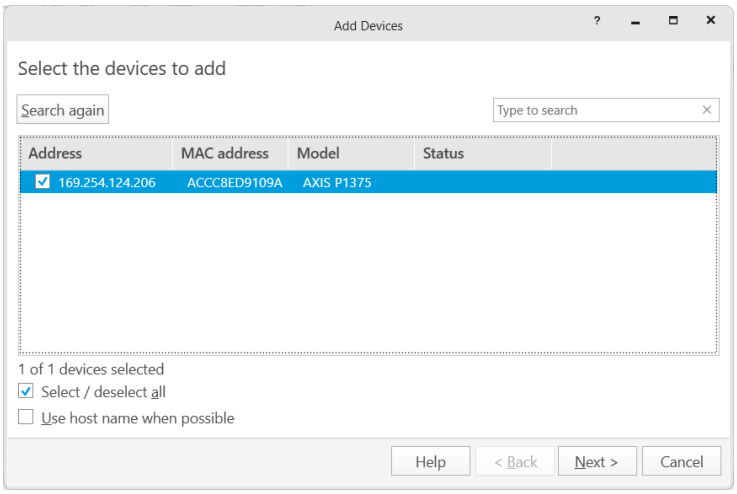

5. Click "Finish" in the next window to finalize adding the device.

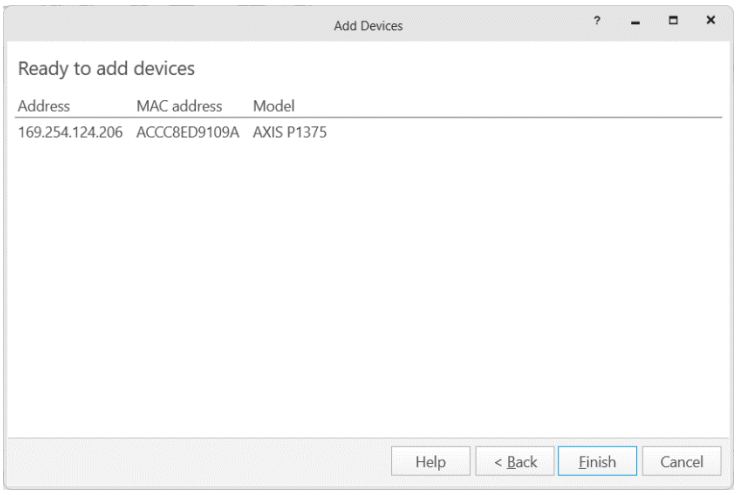

6. The new FireCatcher Camera now appears in the Axis Device Manager Client. To change the IP address, right-click the camera and select "Assign IP Address".

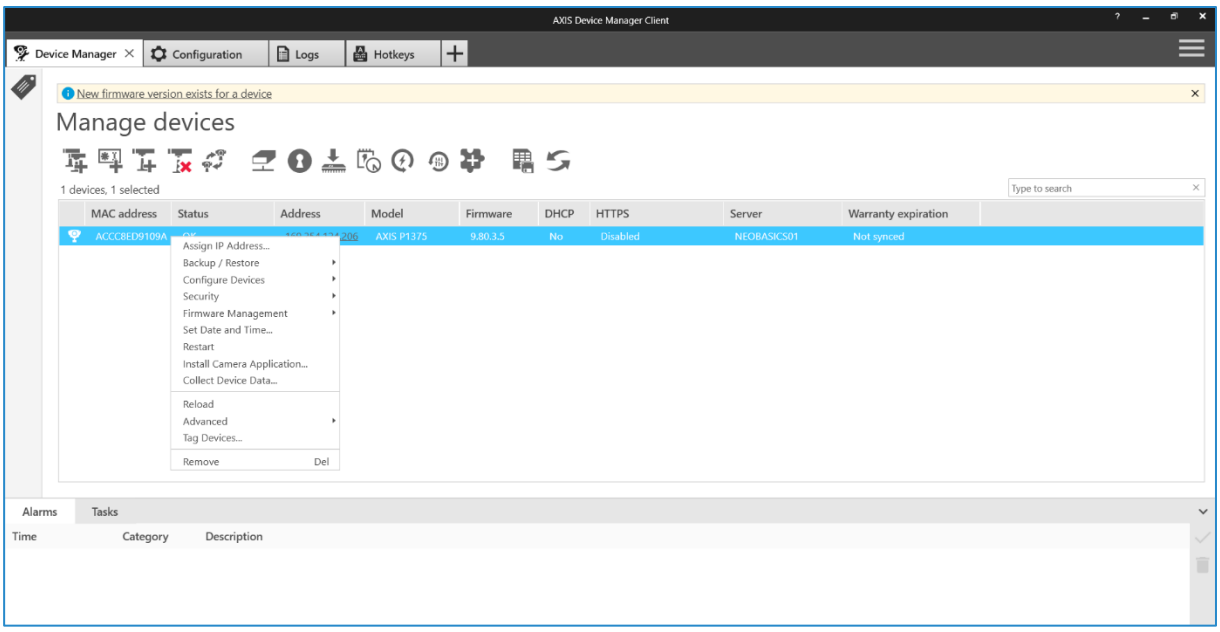

7. A dialog box appears that allows to provide a fixed IP address or use DHCP. Provide IP address, subnet mask and default router address if you want to configure a fixed IP address and click "OK". Confirm the action in the pop-up window.

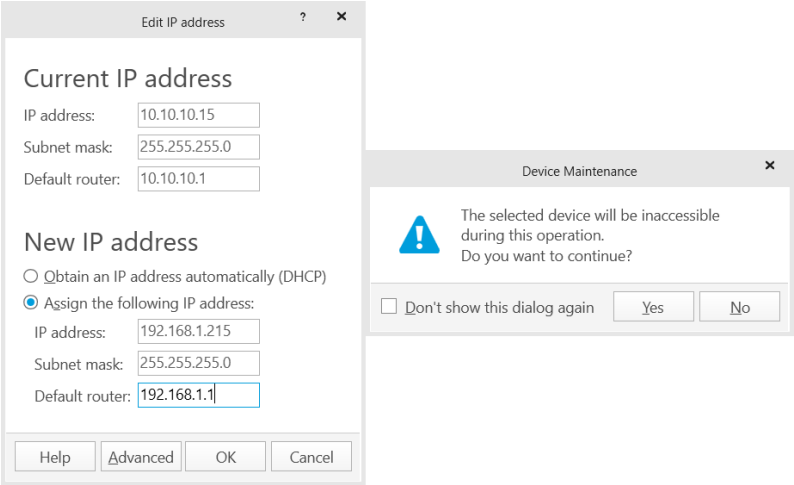

8. The FireCatcher Camera enters 'maintenance mode' and after a while appears in the Axis Device Manager Client with the new IP address.

Attention: Do not upgrade the camera firmware, even if the Axis Device Manager Client indicates there is a newer firmware available. FireCatcher Camera is only certified with a dedicated camera firmware. Upgrading the firmware may violate product approvals.

Viewing the camera stream

The live camera stream can be used to verify operation and/or align the camera mechanically for a proper field of view.

The image of the camera can be visualized in standard browser software by entering the IP address in the site address bar. Clicking the 'Play' button in the video window will show live video from the camera.

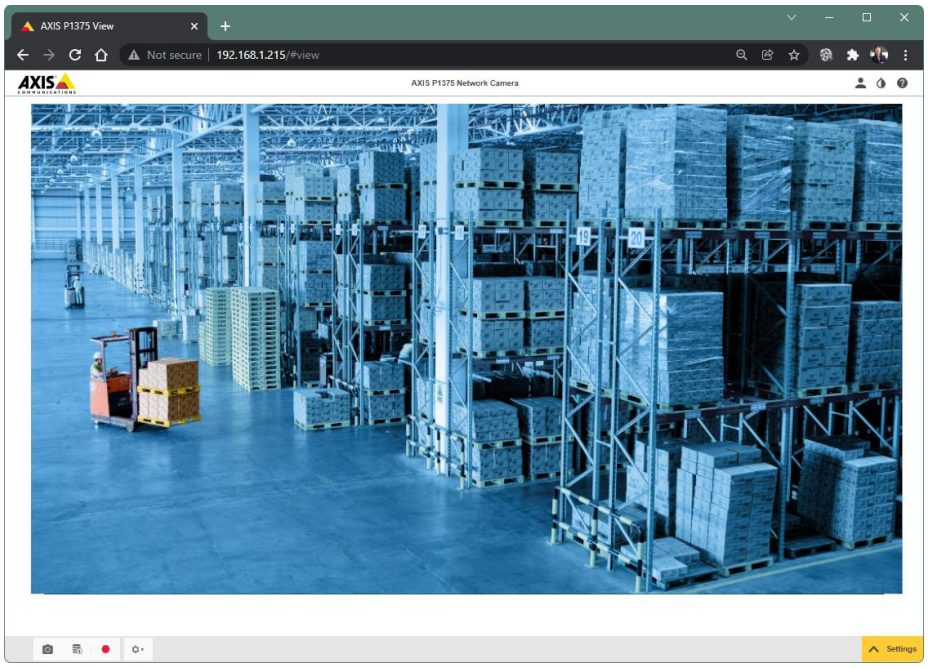

Fine-tuning focus

Fine-tune the focus.

Attention: Always adjust the mechanical back-focus manually first as described in Installation instructions before fine-tuning the focus.

To adjust the focus of the lens, follow these steps:

1. Open a browser and log into the camera web interface.
2. Click on the play button to view live video.
3. Select the Image tab.

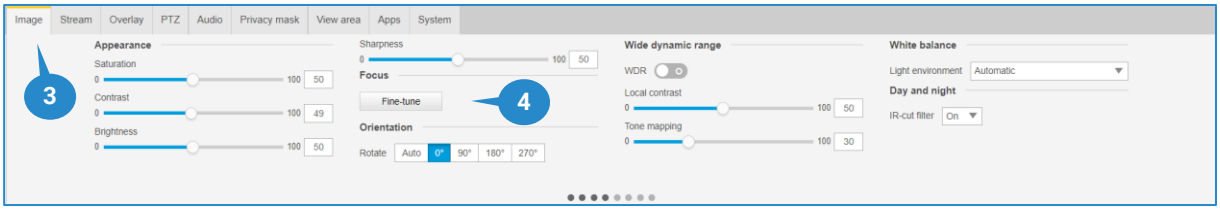

4. Click “Fine-tune”. A pop-up box and a rectangular area overlay on the video appear.
5. By default, the standard area will do. Only in exceptional cases, re-adjust the focus area.
6. Click “Reset focus”. This sets the lens to the back-focus. Check if this is still sharp enough. If not, re-adjust the mechanical back-focus on the camera.
7. Click “Fine-tune”. The focus will be optimized for the selected area
8. Click “Close” to close the focus dialog.