ARGON 18



E119

VALID FOR MY2025-2026 VERSION 5.0 / 2026-11-12

ARGON 18



E119

VALID FOR MY2025-2026 VERSION 5.0 / 2026-11-12

ARGON 18



E119

VALID FOR MY2025-2026 VERSION 5.0 / 2026-11-12

TABLE OF CONTENTS

1. Fit / Stack & Reach	4
2. Tools Needed & Emergency Repair Kit	5
3. Frameset Inspection & Torque Chart	6
4. Troubleshooting / Tips & Specifications	7
5. Frameset SKU's & Descriptions	8-12
6. Seat Post Assembly	13-16
7. Derailleur Hanger Installation & Adjustments	17-18
8. Fork & Headset Assembly	19-21
9. Brake Assembly & Installation	22-24
10. Frame Routing - Di2	25-31
11. Frame Routing - eTap	32-36
12. Frame Routing - Mechanical	37-41
13. Brake Lever Assembly & Installation	42-49
14. Cockpit Assembly	50-61
15. Stack & Angulation Adjustments	62
16. Bento Box Installation	63
17. Bottle Cage Installation	64
18. Toolbox Components & Door Installation	65-66
19. Disc & Wheel Installation	67-68
20. Computer Mount Installation	69
21. Threaded Insert Change	70
22. Bleeding Procedures & Additional Information	71-73

To maintain the validity of the warranty, the bicycle must be fully assembled by an authorized Argon 18 dealer. High-end components, such as carbon parts, require extra care during assembly.

These components must be installed using a torque wrench to ensure each bolt is at the specified torque setting to prevent damage.



MY E-119

Date of purchase: _____

Retailer: _____

Size: _____

Serial number: _____

I. FIT / STACK & REACH

Sizing chart

		A	B	C		D		E	
Saddle Height	Suggested Size	Seat Tube Angle	Top Tube	Maximum Stack*	Minimum Stack*	Maximum Reach*	Minimum Reach*	Maximum Drop	Minimum Drop
cm		deg	mm	mm	mm	mm	mm	cm	cm
58	XS	78	491	663	573	501	414	0,6	9,6
59	XS	78	491	663	573	501	414	-0,4	8,6
60	XS	78	491	663	573	501	414	-1,4	7,6
61	XS	78	491	663	573	501	414	-2,4	6,6
62	XS	78	491	663	573	501	414	-3,3	5,7
63	XS	78	491	663	573	501	414	-4,3	4,7
64	XS	78	491	663	573	501	414	-5,3	3,7
65	XS	78	491	663	573	501	414	-6,3	2,7
66	XS	78	491	663	573	501	414	-7,3	1,7
67	XS	78	491	663	573	501	414	-8,2	0,8
68	XS	78	491	663	573	501	414	-9,2	-0,2
69	XS / S	78	491 / 505	663 / 673	573 / 583	501 / 511	414 / 424	-10.2 / -9.2	-1.2 / -0.2
70	XS / S	78	491 / 505	663 / 673	573 / 583	501 / 511	414 / 424	-11.2 / -10.2	-2.2 / -1.2
71	S	78	505	673	583	511	424	-11,1	-2,1
72	S	78	505	673	583	511	424	-12,1	-3,1
73	S	78	505	673	583	511	424	-13,1	-4,1
74	S / M	78	505 / 518	673 / 688	583 / 598	511 / 521	424 / 434	-14.1 / -12.6	-5.1 / -3.6
75	M	78	518	688	598	521	434	-13,6	-4,6
76	M	78	518	688	598	521	434	-14,5	-5,5
77	M	78	518	688	598	521	434	-15,5	-6,5
78	M	78	518	688	598	521	434	-16,5	-7,5
79	M / L	78	518 / 533	688 / 713	598 / 623	521 / 531	434 / 444	-17.5 / -15.0	-8.5 / -6.0
80	L	78	533	713	623	531	444	-15,9	-6,9
81	L	78	533	713	623	531	444	-16,9	-7,9
82	L	78	533	713	623	531	444	-17,9	-8,9
83	L / XL	78	533 / 549	713 / 743	623 / 653	531 / 541	444 / 454	-18.9 / -15.9	-9.9 / -6.9
84	L / XL	78	533 / 549	713 / 743	623 / 653	531 / 541	444 / 454	-19.8 / -16.9	-10.8 / -7.9
85	XL	78	549	743	653	541	454	-17,8	-8,8
86	XL	78	549	743	653	541	454	-18,8	-9,8
87	XL	78	549	743	653	541	454	-19,8	-10,8
88	XL	78	549	743	653	541	454	-20,8	-11,8
89	XL	78	549	743	653	541	454	-21,8	-12,8

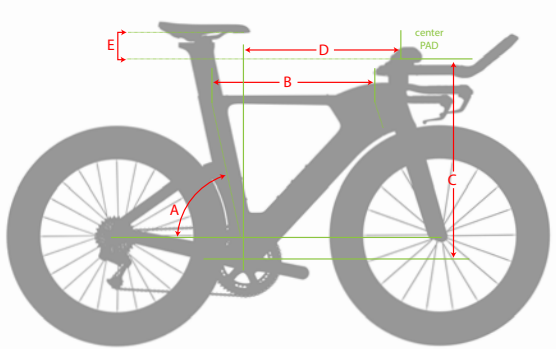

This chart indicates recommended values. Max and min drop values are calculated according to Canadian specifiations.

Contact one of our authorized dealers for further informations on your bike fit.

* Stack and reach are measured at center of elbow pad

2. TOOLS NEEDED & EMERGENCY REPAIR KIT

1. Hydraulic Hose Cutter

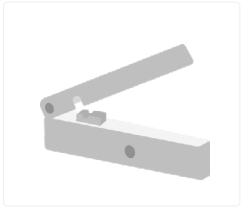

2. Set of Allen Keys



3. Flush Cut Plier



4. Carbon Paste & Grease

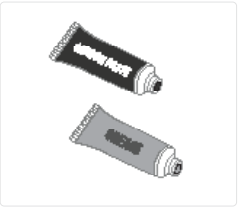

5. Utility Picks



6. Clean Rag

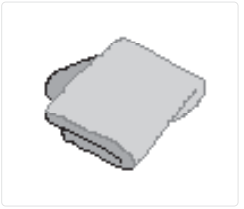

7. Derailleur Hanger Alignment Gauge

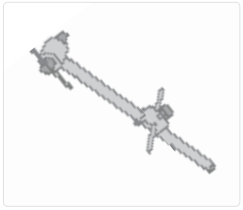

8. Cables and Housing Cutter



9. Medium-strength Thread Locker



10. Isopropyl Alcohol



11. Torque Wrench



12. Cassette Lockring Tool

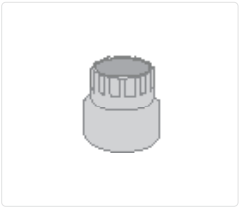

13. 8mm Wrench



14. TRP Bleed Kit

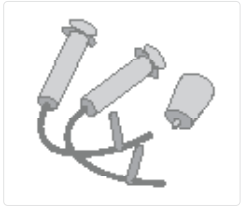

15. Set of Torx Keys



16. TRP Mineral Oil



EMERGENCY REPAIR KIT

IMPORTANT:
Essential parts to always have on hand
IN CASE OF EMERGENCY...
THIS MIGHT SAVE YOUR RIDE!

1. Seat Post Clamp



81504

2. Spare Rear Derailleur Hanger

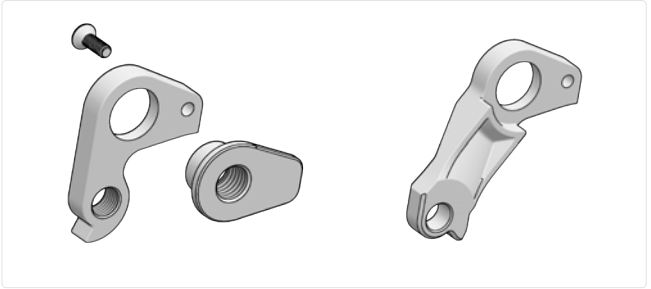

80802 80832

3. Spare Brake Pad



Tektro F10RS Semi-Metallic

3. FRAMESET INSPECTION & TORQUE CHART

No.	A18 SKU#	Function	Description	Screw Type	Torque	Detail	Qty
1	81499*	Front derailleur hanger screw	M5 x 16 mm screw	Flat head	3 Nm	Grease	2
2	80802*	Rear derailleur hanger screw	M4 x 12 mm screw	Flat head	2 Nm	Loctite	1
3	81504*	Seat post clamp top screw	M8 x 10 mm screw	Set screw	5.5 Nm	Grease	1
4	81504*	Seat post clamp bottom screw	M3 x 8 mm screw	Button head	Hand Tighten Slack	Loctite	1
5	80249	Water bottle screw	M5 x 14 mm screw	Button head	3 Nm	Grease	3
6	81505* (345A) 81506* (345B)	Rear brake cover side screw	M4 x 10 mm screw	Flat head	Hand Tighten	Loctite	1
7	81505* (345A) 81506* (345B)	Rear brake cover bottom screw	M4 x 16 mm screw	Button head	Hand Tighten	Loctite	1
8	81507*	Door frame screw	M4 x 10 mm screw	Flat head	Hand Tighten	Loctite	4
9	81510	Thread insert for fork and handlebar	M6/M10 x 10.5 mm	Threaded insert	Positioned	Loctite	4
10	81511*	Steerer clamp screw	M5 x 12 mm screw	Socket head	3 Nm	Grease	1
11		Ritchey saddle clamp screw	M5 x 16 mm screw	Socket head	6 Nm	Loctite	2
12		Ritchey saddle rail clamp screw	M6 x 55 mm screw	Socket head	12 Nm	Loctite	1
13	81512* (Mech) 81513* (Di2) 81514* (eTap)	Brake lever shifter adapter screw	M3 x 12 mm screw	Socket head	Hand Tighten	Grease	2
14	81544*	Extension clamp screw	M5 x 14 mm screw	Flat head	5 Nm	Grease	2
15	81520*	Water bottle mount screw	M5 x 8 mm screw	Button head	3 Nm	Grease	1
16	81520*	Water bottle mount screw	M5 x 12 mm screw	Button head	3 Nm	Grease	1
17	81520*	Water bottle mount screw	M5 x 16 mm screw	Button head	3 Nm	Grease	1
18	81254*	Swivel screw	M6 x 18 mm screw	Socket head	9 Nm	Grease	2
19	81532 - 81541	Spacer screw	M6 x 30 to 120 mm screw	Socket head	9 Nm	Grease	2
20	80300	Armrest screw	M5 x 12 mm screw	Flat head	2 Nm	Grease	4
21	81545	First spacer screw	M6 x 16 mm screw	Button head	6 Nm	Grease	2
22	80812	Front thru-axle	M12 x 1.5 x 119 mm Axle	-	15 Nm	Grease	1
23	80813	Front thru-axle	M12 x 1.5 x 161 mm Axle	-	15 Nm	Grease	1
24	81562	Bento box screw	M4 x 16 mm screw	Socket head	Hand Tighten	Loctite	3
25	81551*	TRP lever bleed screw	M6 x 7 mm screw	Button head	2 - 4 Nm	Dry	2
26	81548	TRP caliper bleed screw	M5 x 6 mm screw	Cone point Set screw	3 Nm	Dry	2
27	81547* 81551* 81555*	TRP compression nut	M8 x P0,75 x 7 mm	Nut	5 - 7 Nm	Loctite	4
28	81549	TRP brake pad pin	M4 x 25 mm Pin	Socket head pin	2 Nm	Loctite	2
29	81550	Rear caliper fixing screw	M5 x 20 mm screw	Socket head	7 Nm	Loctite	2
30	81556	Front caliper fixing screw	M5 x 27 mm screw	Socket head	7 Nm	Loctite	2
31	**	TRP centerlock lockring	-	Disc lockring	40 Nm	Loctite	2
32		GPS mount screw	M3 x 8 mm screw	Flat head	Hand Tighten	Grease	2
33	81553*	Brake lever wedge screw	M3 x 12 mm screw	Socket head	2 Nm	Grease	2
34	81560*	Stem Cap Screw	M3 x 6 mm screw	Flat head	Hand Tighten	Grease	2

* Included With ** Availlaible at Tektro

Before assembling your new E-119, please :

1. Check your parts against the frameset parts checklist (see p.8-12)
2. Inspect the frame for cosmetic defects (scratches, bumps, cracks, paint defects, etc.)
3. Record serial number on p.3 for reference.
4. Make sure you have all the necessary bolts (refer to frameset parts, p.8-12)
5. For optimal shifting performance, use a derailleur alignment gauge to make sure that the derailleur hanger is straight.

⚠ Some of the following parts are already assembled on the frame. When assembling the bike, you will need to adjust these parts according to their torque specifications and fastener conditions when necessary.

4. TROUBLESHOOTING / TIPS & SPECIFICATIONS

Brakes

Use only supplied Tektro brakes.
The frame is compatible with 140 mm disc rotors only.
Rear mount thickness is 10 mm. Use a M5 x 20mm mounting screw.
The fork is compatible with 140 mm disc rotors only.
Use a 27 mm mounting screw.

Tire Clearance

The largest tires that can be installed are 700x28c, they must be no wider than 30 mm, for the front and rear wheels.

Seat Post

Argon 18 exclusive Aero Seatpost Shape, compatible with our other E-119 and E-117 SP.

Saddle Clamp

The saddle clamp is compatible with Ø 7mm saddle rails. If your saddle rails are not round, please refer to the Ritchey part numbers listed below. These parts are not sold by Argon 18, but they are available on Ritchey's website (ritcheylogic.com).

55055467004 for 7x7mm saddle rail
41055467003 for 8x8.5mm saddle rails
41055467002 for 7x9.6mm saddle rails

Front Mechanical Derailleur

The E-119 Tri Disc family is designed to work with full housing compatible front derailleurs. The front derailleur must have an integrated cable stop.

Bottom Bracket

BB86 (press-fit)

Headset

Top bearing: MR136-1 1/4", 45° x 45° stainless steel
Bottom bearing: MR122-1 1/8", 36° x 45°

Chainring

The E-119 Tri Disc family is designed to work with round chainrings with 50 to 57 teeth and oval chainring with the equivalent max. OD of a 57T round chainring.

Please contact customer service at info@argon18.com for any further inquiries.

Seat Post Collar

Argon18 exclusive, E-119Tri+ Disc seatpost clamp. The seatpost clamp on the E-119 Tri+ Disc is NOT the same as the rim brake version on the Nitrogen, E-117 and E-119.

Disc brake rotor

The disc brake system is compatible with any 140mm disc on the market, although it's optimized for the Tektro Disc. Argon 18 cannot guarantee optimal performance with other disc brake rotors.

Disc brake pad

Use a Tektro F10RS compatible brake pad. Also compatible with Shimano K02S/K04S pads.

Power Meter

The E-119 Tri Disc family is designed to work with the most of the power meters available on the market.

*For **hub/wheel**-based power meters*:
The system must be compatible with a 12 mm X 142 mm OLD rear thru-axle.

*For **crank/chainring-spider**-based power meters:*
The E-119 Tri Disc frame has enough clearance to fit most models of Stages, Quarq, Rotor, SRM, 4iiii, FSA PowerBox (Power2Max NG Eco), etc.

Please contact your local Argon 18 authorized retailer for confirmation before purchasing.



Always clamp the bike by the **seatpost**. Clamping it by any other tube might damage the frame and could cause an accident and/or injury.

5.1 FRAMESET SKUS




36165


80813


80812


201197


81507


201155 (368A)
201157 (368B)
201511 (368C)


201154 (368A)
201156 (368B)
201510 (368C)


81249


80804

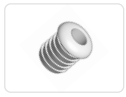
80985


80805


80264


80811


81503


81500

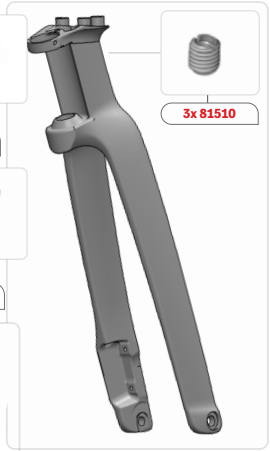

FK.119+D.size.368A
FK.119+D.size.368B
FK.119+D.size.368C


38934 (MR122)


80289 (XS-S)
80290 (M)
80291 (L)
80767 (XL)


81499


80802


80832


81498



81515


80650 (MR136)


81511

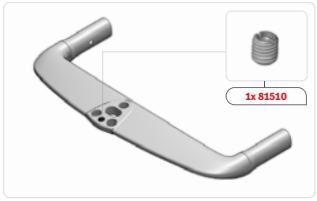

201159 (368A/B/C)


81519


2x 81544


81523


81521


81518


81522


38977


81531


81545


81525


81524


81542


81543

80300

81560

81561
Not included
Availlable as
spare parts

*Except for the frame itself, which is not sold separately as a spare part, all parts can be ordered by referring to their respective SKU numbers.

5.1 FRAMESET SKUS AND DESCRIPTIONS









*Except for the frame itself, which is not sold separately as a spare part, all parts can be ordered by referring to their respective SKU numbers.

5.2 FRAMESET SKUS AND DESCRIPTIONS

NO.	NAME	AI8 SKU#	QTY
1	E-119 TRI+ Disc FRAME	-	1
2	E-119 Disc Chain Suck Guard	81498	1
3	E-119 Disc FD HANGER REMOVABLE (incl. screws)	81499	1
4	E-119 Disc FD Di2 Grommet	81500	1
5	E-119 Disc Cover for 1X (368A) E-119 Disc Cover for 1X (368B) E-119 Disc Cover for 1X (368C)	201154 (368A) 201156 (368B) 201510 (368C)	1
6	E-119 Disc FD eTap Grommet	81503	1
7	Rear Der. hanger TA Type A (incl. screw)	80802	1
8	Rear derailleur hanger, Direct mount TA Type A	80832	1
9	E-119 Disc SP Clamp assembly	81504	1
10	BHCS - M5x14 LG - Water Bottle Mount	81249	3
11	Plastic Plug for Water bottle eyelet	80264	3
12	Long plug grommet	80804	1
13	Long grommet Di2	80805	1
14	Long gommet mechanical	80985	1
15	E-119 Disc Rear Brake Cover (368A/B/C) incl. Screws	201158 (368A/B/C)	1
16	Stainless top bearing - MR136	80650	1
17	Bottom Bearing - MR 122	38934	1
18	E-119 Disc Toolbox Door Framing incl. screws	81507	1
19	E-119 Disc Toolbox Door Assembly (368A) E-119 Disc Toolbox Door Assembly (368B) E-119 Disc Toolbox Door Assembly (368C)	201155 (368A) 201157 (368B) 201511 (368C)	1
20	Fork E-119T+ Disc ASSEMBLY - X-SMALL Fork E-119T+ Disc ASSEMBLY - SMALL Fork E-119T+ Disc ASSEMBLY - MEDIUM Fork E-119T+ Disc ASSEMBLY - LARGE Fork E-119T+ Disc ASSEMBLY - X-LARGE	FK.119+D.XS.368A/B/C FK.119+D.S.368A/B/C FK.119+D.M.368A/B/C FK.119+D.L.368A/B/C FK.119+D.XL.368A/B/C	1
21	E-119 Disc Thread-Locking-Insert (M6xM10)	81510	4
22	E-119 Disc Fork Steerer Clamp Assembly	81511	1
23	Steerer for E-119, X-Small & Small Steerer for E-119, Medium Steerer for E-119, Large Steerer for E-119, X- Large	80289 (XS-S) 80290 (M) 80291 (L) 80767 (XL)	1
24	E-119 Disc Seatpost assembly	SP.119+D.368A	1
25	Internal battery holder for triathon seatpost	80167	1
26	Ritchey SP Head	Available at ritcheylogic.com	1
27	E-119 Disc Handlebar	201159 (368A/B/C)	1

5.2 FRAMESET SKUS AND DESCRIPTIONS

NO.	NAME	AI8 SKU#	QTY
28	51 Speedshop extension bar pair	81518	1
29	E-119 Disc Handlebar Hood Set for Mechanical	81512	1
30	E-119 Disc Handlebar Hood Set for Di2	81513	1
31	E-119 Disc Handlebar Hood Set for SRAM	201194	1
32	E-119 Disc Bridge	81519	1
33	E-119 Disc Spherical Washer/Ext clamp screw	81544	2
34	E-119 Disc Water-bottle mount with screws	81520	1
35	E-119 Disc Plug for bridge cable routing	81521	1
36	E-119 Disc Plug for extension cable routing	81522	2
37	Extension bar end cap mechanical	38977	2
38	E-119 Disc Bridge Cap	81523	1
39	E-119 Disc Bean+Swivel screw	81524	1
40	E-119 Disc Swivel	81525	1
41	E-119 Disc 5 mm Stack Spacer	81526	1
42	E-119 Disc 10 mm Stack Spacer	81527	1
43	E-119 Disc 20 mm Stack Spacer	81528	1
44	E-119 Disc 40 mm Stack Spacer	81529	1
45	E-119 Disc 70 mm Stack Spacer	81530	1
46	E-119 Disc First Spacer	81531	1
47	E-119 Disc Spacer screw M6 x 1.0 x 30 mm	81532	2
48	E-119 Disc Spacer screw M6 x 1.0 x 40 mm	81533	2
49	E-119 Disc Spacer screw M6 x 1.0 x 50 mm	81534	2
50	E-119 Disc Spacer screw M6 x 1.0 x 60 mm	81535	2
51	E-119 Disc Spacer screw M6 x 1.0 x 70 mm	81536	2
52	E-119 Disc Spacer screw M6 x 1.0 x 80 mm	81537	2
53	E-119 Disc Spacer screw M6 x 1.0 x 90 mm	81538	2
54	E-119 Disc Spacer screw M6 x 1.0 x 100 mm	81539	2
55	E-119 Disc Spacer screw M6 x 1.0 x 110 mm	81540	2
56	E-119 Disc Spacer screw M6 x 1.0 x 120 mm	81541	2
57	E-119 Disc Armrest Cup Set	81542	1
58	E-119 Disc Armrest Foam Set	81543	1
59	Armrest cup screw Flat Head Hex screw - M5 x 12 mm	80300	4
60	E-119 Disc First spacer screw	81545	2
61	E-119 Disc Computer mount	81564	1
62	DT Swiss RWS thru axle FRONT 12 x 119 mm no Handle	80812	1

5.2 FRAMESET SKUS AND DESCRIPTIONS

NO.	NAME	AI8 SKU#	QTY
63	DT Swiss RWS thru axle REAR 12 x 161 mm w/ Handle	80813	1
64	3D Headset tool	36165	1
65	E-119 Disc Bento box	81558	1
66	E-119 Disc Bento box clamp	81559	1
67	E-119 Disc Tall Stem Cap with M3x6 mm Flat Head Hex Screw	81560	1
68	E-119 Disc Stem Cap Rubber Plug (Not included, availlable as spare parts)	81561	2
69	E-119 Disc Socket Head Cap Screw M4 x 0.7 x 16	81562	3
70	Foam liner for hydraulic hose	80811	3
71	E-119 Disc Rear Caliper Assembly (TKD120-R)	81547	1
72	E-119 Disc TRP Bleed Screw	81548	2
73	E-119 Disc TRP Brake Pad Pin	81549	2
74	E-119 Disc 20mm Rear Flat mount Screw	81550	2
75	E-119 Disc Right Brake lever Assembly	81551	2
76	E-119 Disc Lever wedge set with screw	81553	2
77	E-119 Disc Front Caliper Assembly (TKD120-F)	81555	1
78	E-119 Disc 27mm Front Flat mount Screw	81556	2
79	Extension End-cap Wireless Blip	201197	2



Torque Value

Allen key size



Apply **carbon paste** on the indicated surfaces.



Apply **threadlocker** on the indicated surfaces.



Apply **grease** on the indicated surfaces.

IMPORTANT:
Indicates special precautions and important steps that must be taken to avoid damage and/or injury.

6.1 SEAT POST ASSEMBLY



The seat post comes fully assembled.

1. Loosen the two M5 x 16mm screw to allow the seat post head assembly to slide.
2. Apply a drop of blue threadlocker (no. 242) to the M5 x 16 mm screw threads.
3. Position the seat post head at the desired position and tighten the two M5 x 16 mm screws to 6 Nm.
4. Unscrew the M6 x 55 mm as far as possible without fully removing from the lock nut (A).
5. Apply a drop of blue threadlocker (no. 242) to the M6 x 55 mm screw threads.
6. Apply carbon paste to the curved face of the lower part (B)
7. Set the saddle rails into the seatpost clamp.
8. Adjust the angle of the saddle and tighten the M6 x 55 mm screw to 12 Nm.

IMPORTANT:
The E-119 Tri+ Disc's saddle rail clamp is made for 7mm round saddle rails (Ritchey part number: 55055467004). For other types of saddle rails, select one of the following Ritchey components: 41055467003 for 8 x 8.5 mm saddle rails and 41055467002 for 7 x 9.6 mm saddle rails.

6.1 SEAT POST ASSEMBLY

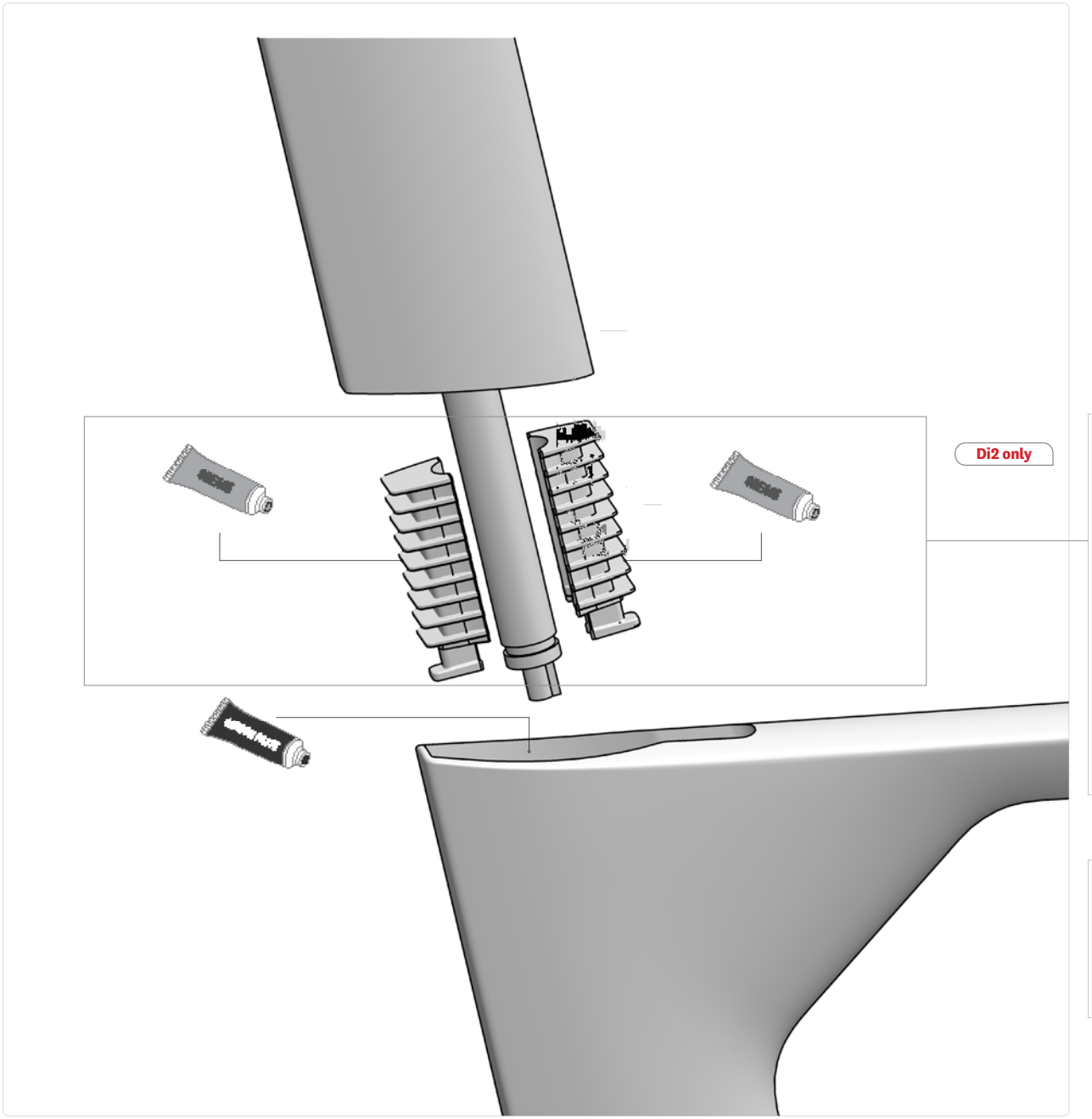

Assembling with Shimano Di2
The Di2 battery is hidden in the seatpost**:**

1. Apply grease on the ribs of the internal battery holder (SKU: 80167)
2. Place the battery between both pieces of the internal battery holder.
3. Slide the assembly into the seatpost.
4. Route a Di2 cable down to the BB and connect it to the battery.
5. Follow the other groupset steps to complete the assembly.

Assembling with other groupsets:

1. Apply carbon paste to the inside of the frame (seat tube).
2. Slide the seatpost into the cavity.

6.2 SEAT POST COLLAR ASSEMBLY

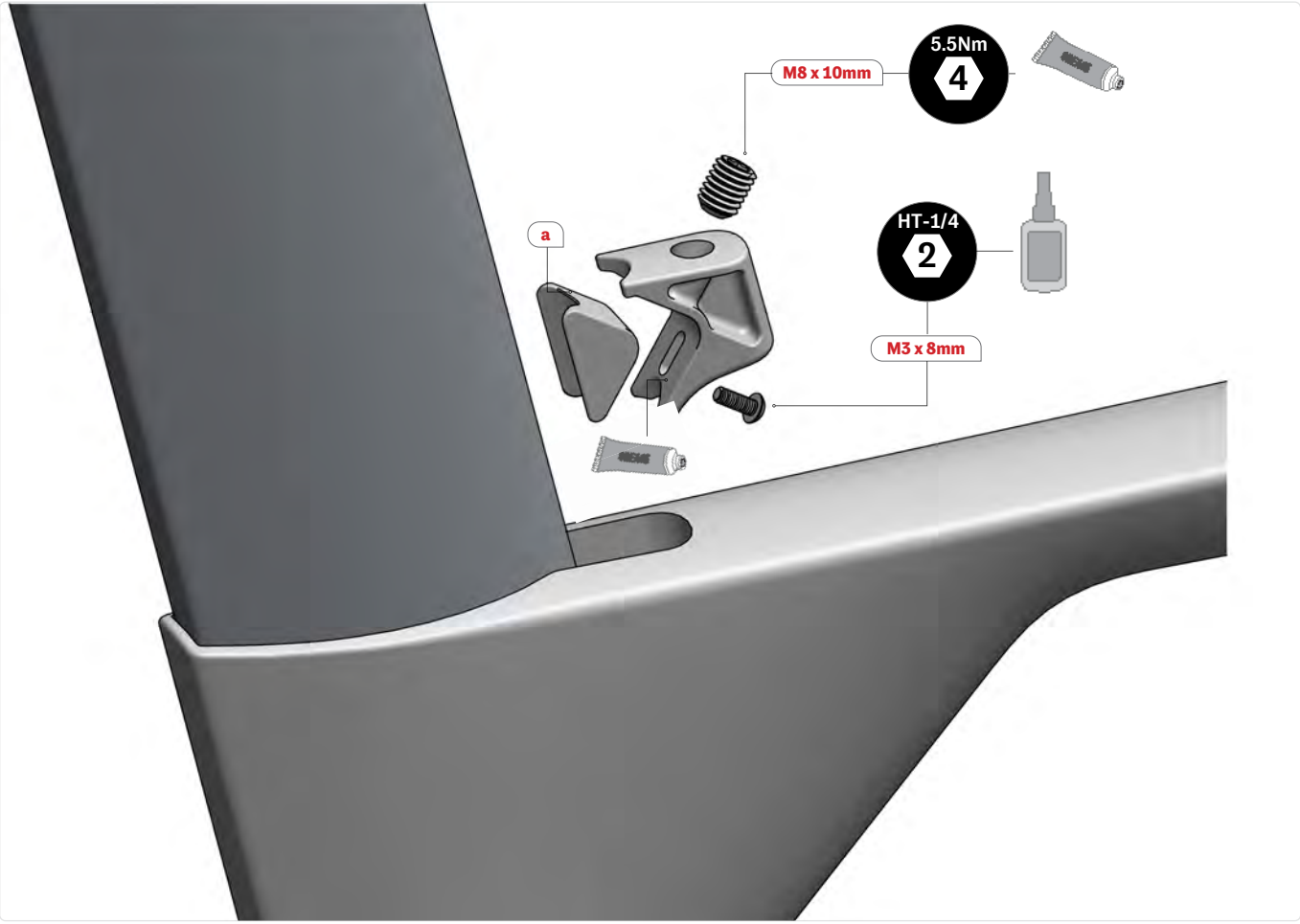

1. Apply grease to the lower angled surface of the seat post collar.
2. Apply a drop of blue threadlocker (no. 242) to the M3 x 8 mm screw threads.
3. Hand tighten the M3 x 8 mm screw and loosen 1/4 turn back, so that the wedge (a) can to slide.
4. Apply grease on the threads of the M8 x 10 mm set screw.
5. Screw the M8 x 10 mm set screw in place.
6. Set the seatpost to the desired height. Follow the seatpost min and max insertion values shown on the next page.
7. Tighten the M8 x 10 mm set screw of the seat post clamp to 5.5 Nm.

IMPORTANT:
The E-119 Tri+ Disc's seat clamp is **NOT** the same as the Nitrogen and E-119 Rim brake version.

IMPORTANT:
Refer to p.16 for seat post **MIN** and **MAX** insertion values.

6.3 SEAT POST MIN AND MAX INSERTION

Saddle Height Limits			
Size	Max Saddle Height mm	Min Saddle Height mm	Formula Value
	A	B	C
X-Small	790	610	735
Small	836	656	731
Medium	851	671	731
Large	877	697	757
X-Large	908	728	788

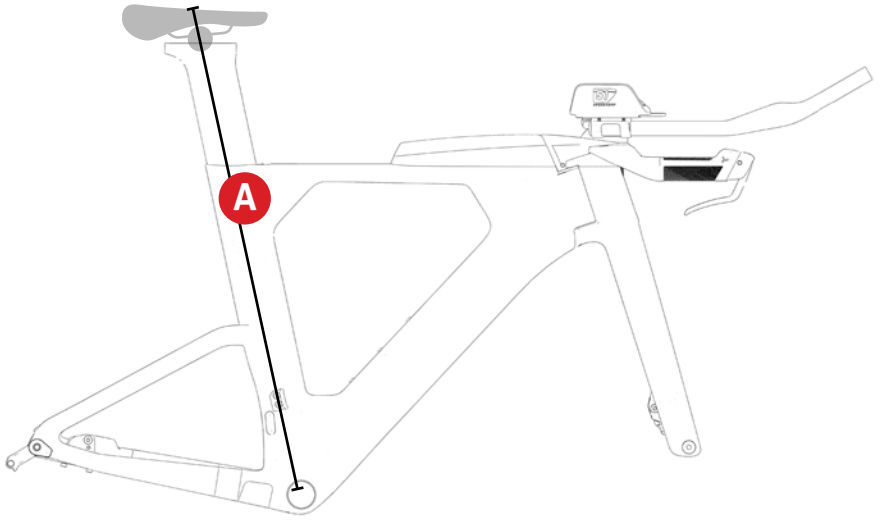

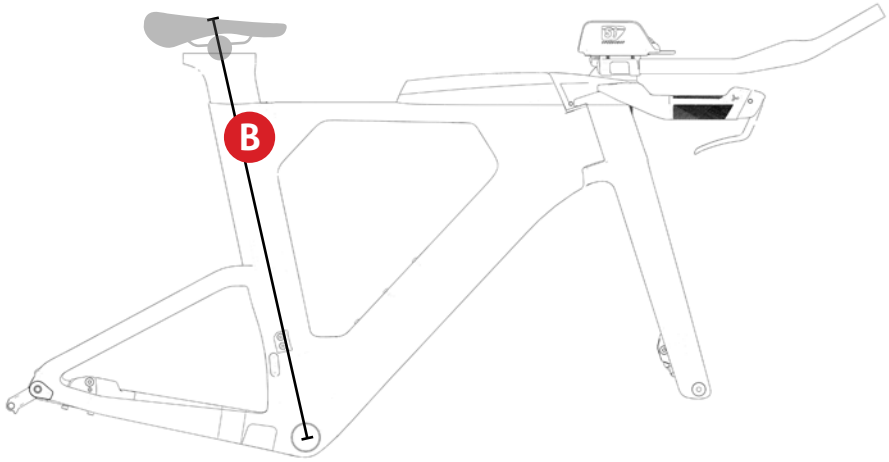

My desired saddle height

- The value must be between A & B **based on your bike size**.
- Measured from the **BB center to the top of the saddle***
- Based on a chariot and saddle of +/- 155 mm in height.

D = _____ **in mm.**

Seatpost Cutting Formula

Use the values based on your bike size in the sizing chart above.
The cut must be clean and perpenticular to the shaft.

C - D = **Cutting Lenght in mm. (Max. 180 mm)**
If the value is negative, no cutting is neccessary.

Minimum Seatpost Insertion: 80mm
Maximum Seatpost Cut: 180 mm

7.1 REAR DERAILLEUR HANGER ADJUSTMENT

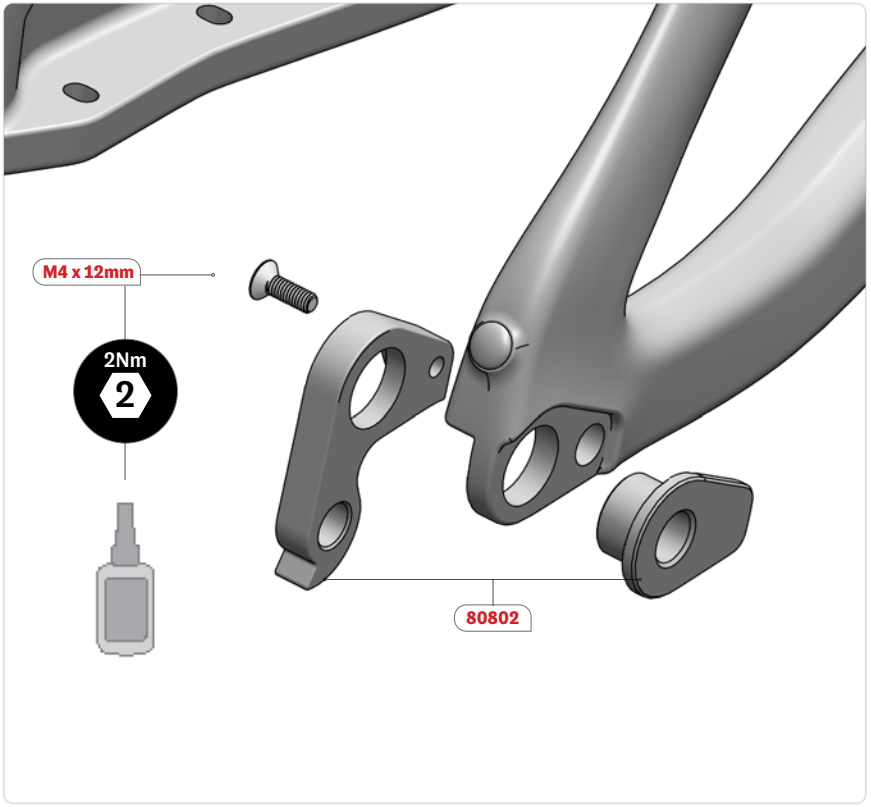

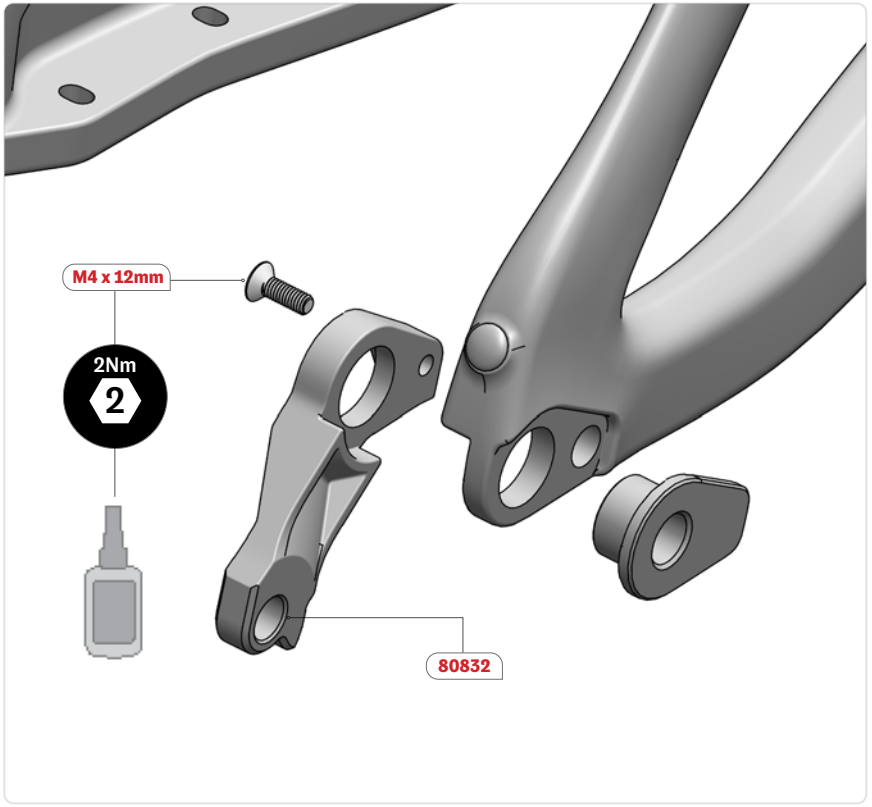

Assembling with a regular hanger:

1. Assemble the rear derailleur hanger (SKU: 80802) on the frame with the flat head cap screw M4 x 12 mm.
2. Apply a drop of blue threadlocker (no. 242) to the M4 x 12 mm screw threads and tighten to 2 Nm.
3. Use a rear derailleur hanger alignment gauge to align the rear derailleur hanger.

For assistance, visit Park Tool's website at:
https://www.parktool.com/blog/repair-help/rear-derailleur-hanger-alignment

Assembling with a direct mount hanger:

1. Assemble the rear derailleur hanger (SKU: 80832) on the frame with the flat head cap screw M4 x 12 mm (included in SKU: 80802).
2. Apply a drop of blue threadlocker (no. 242) to the M4 x 12 mm screw threads and tighten to 2 Nm.
3. Use a rear derailleur hanger alignment gauge to align the rear derailleur hanger.

7.2 FRONT DERAILLEUR HANGER ASSEMBLY

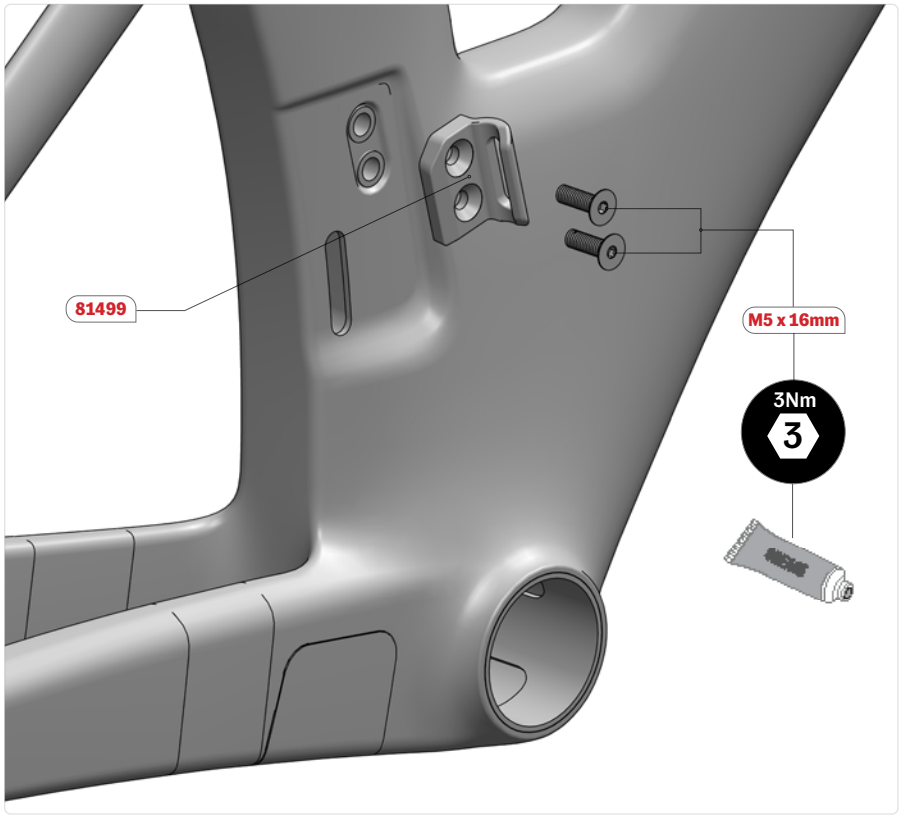



Using a double chainring set-up:

1. Apply grease to the threads of both M5 x 16 mm screws (SKU: 81248).
2. Install the front derailleur hanger (SKU: 81499) on the frame using the two M5 x 16 mm bolts.
3. Tighten the two screws to 3 Nm.

Note:

The front derailleur hanger has been designed to work with round and oval chainrings with 50 to 57 teeth and equivalent max. OD of a round 57T chainring.

Using a single chainring set-up:

1. Apply grease on the threads of the M5 x 16 mm screw (SKU: 81248).
2. Install the cover for a single chainring (SKU: 201154, 201156 or 201510 depending on the artwork) on the frame with one M5 x 16 mm flat head screw.
3. Hand tighten the M5 x 16 mm screw.

8.1 FORK AND HEADSET ASSEMBLY

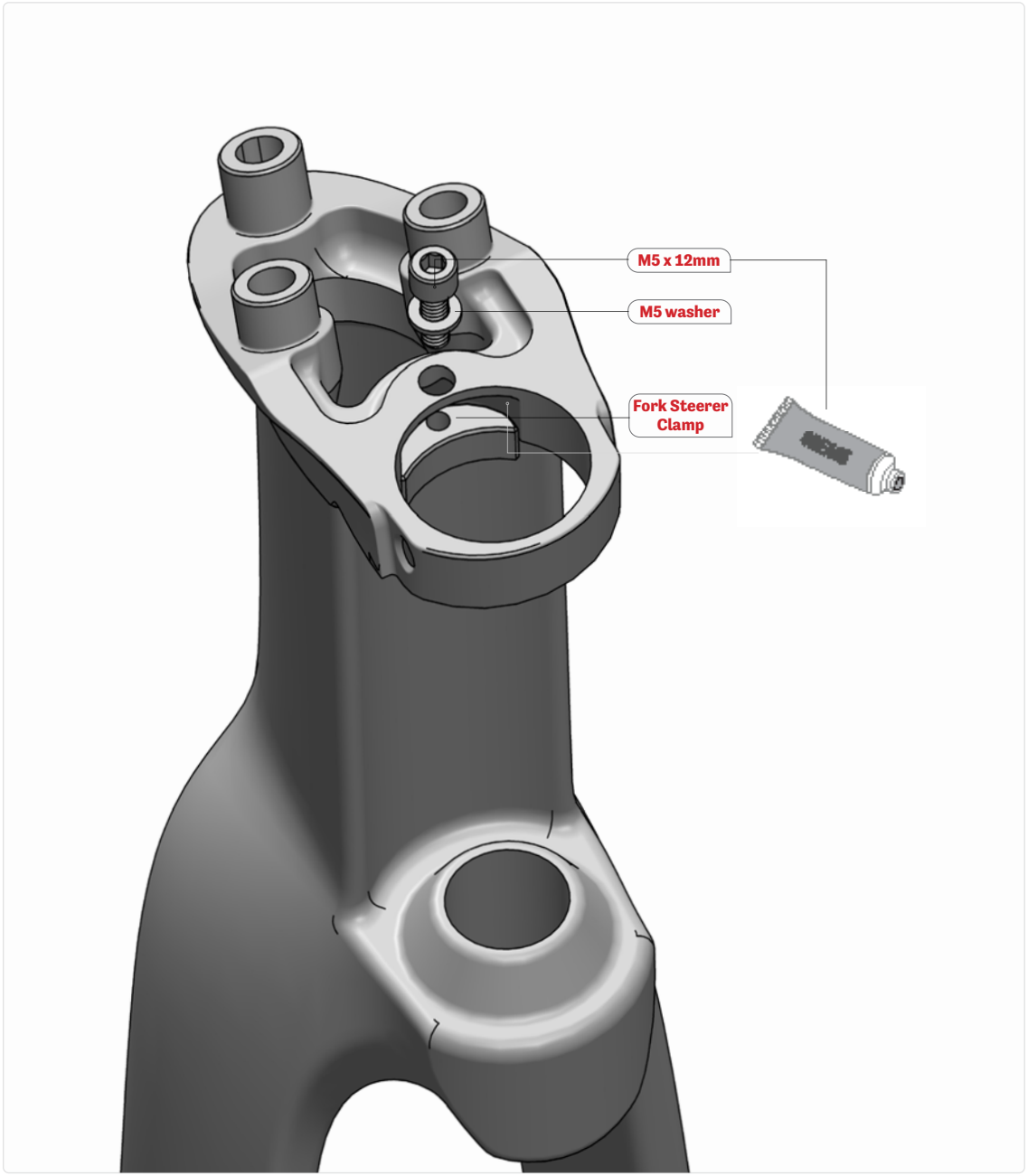

1. Apply grease to the tapered surface inside the fork where the steerer clamp will slide.
2. Insert the steerer clamp in place.
3. Place the M5 washer in the M5 x 12 mm steerer clamp screw.
4. Apply grease to the threads of the M5 x 12 mm screw.
5. Screw the M5 x 12 mm screw for approximately three complete turns, but don't thighten yet.

8.2 FORK AND HEADSET ASSEMBLY

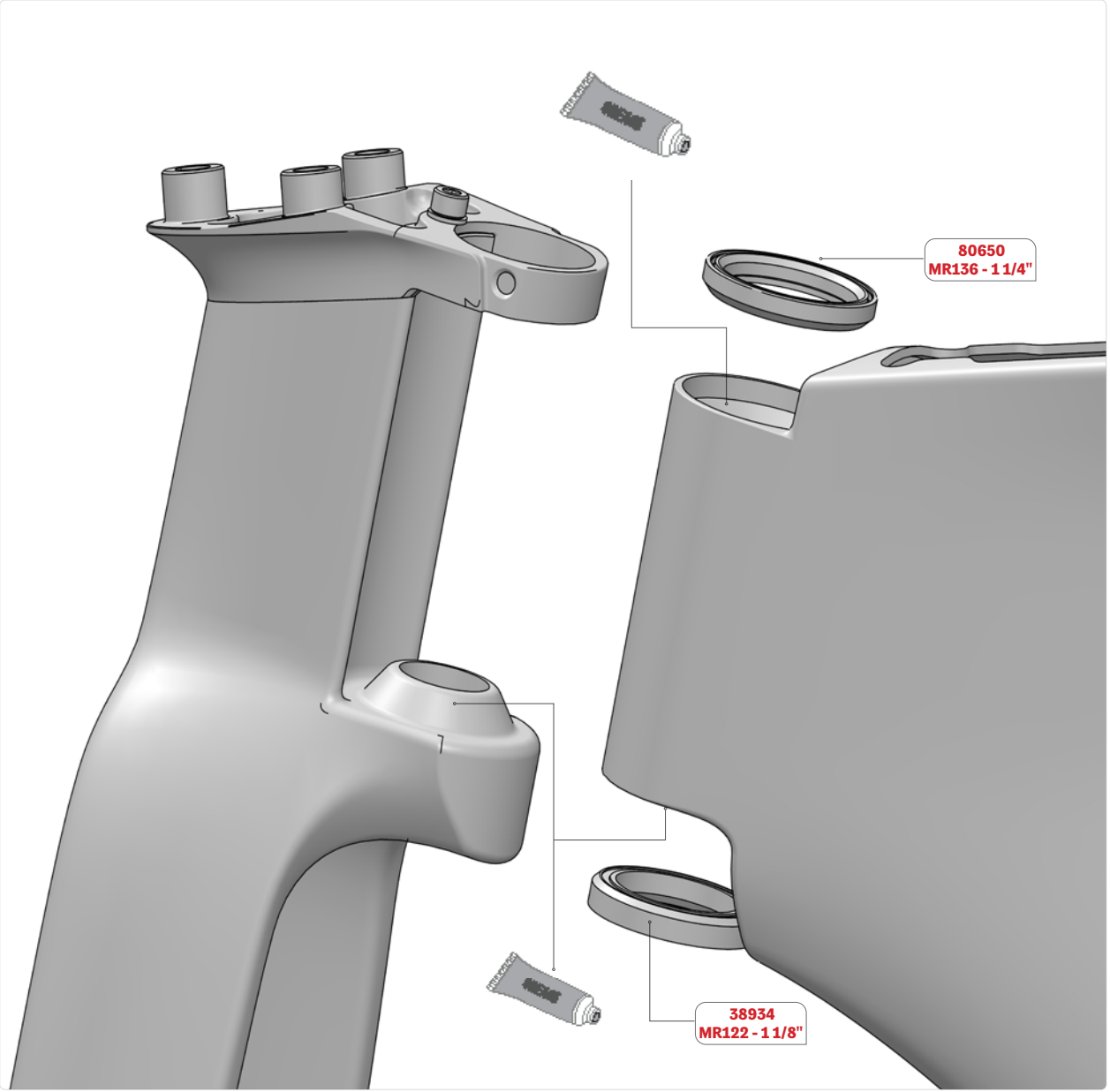

1. Apply grease inside the frame where the top and bottom bearings will sit.
2. Install the top bearing: MR136-1 1/4”, 45° x 45° stainless steel (SKU: 80650).
3. Install the Bottom Bearing: MR122-1 1/8”, 36° x 45° (SKU: 38934).
4. Apply grease to the tapered part of the fork.
5. Install the fork by moving the lower part into place first, followed by the upper part.

8.3 FORK AND HEADSET ASSEMBLY

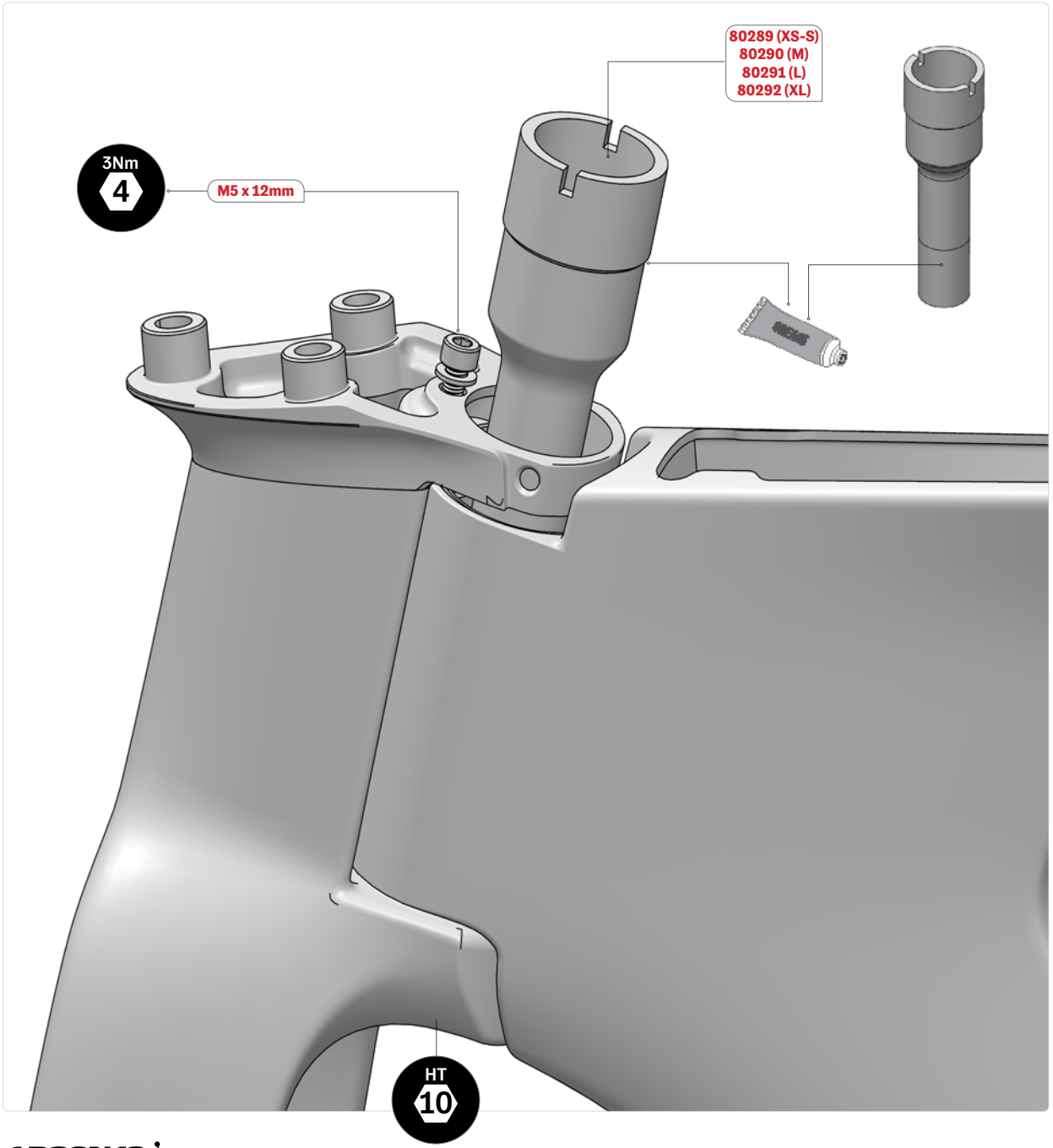

1. Apply grease to the threads and on the tapered contact surface of the steerer.
2. Insert the steerer in place. Note that the steerer is size specific.

   - XS and S SKU: 80289

   -M SKU: 80290

   -L SKU: 80291

   - XL SKU: 80292
3. Tighten with the provided 3D Headset tool (SKU: 36165). The steerer can also be tightened from the bottom with a 10mm hex key.
4. Make sure the fork doesn't have any side play and that the assembly turns smoothly.
5. Tighten the M5 x 12 mm screw of the steerer clamp to 3 Nm.



9.1 FRONT BRAKE ASSEMBLY

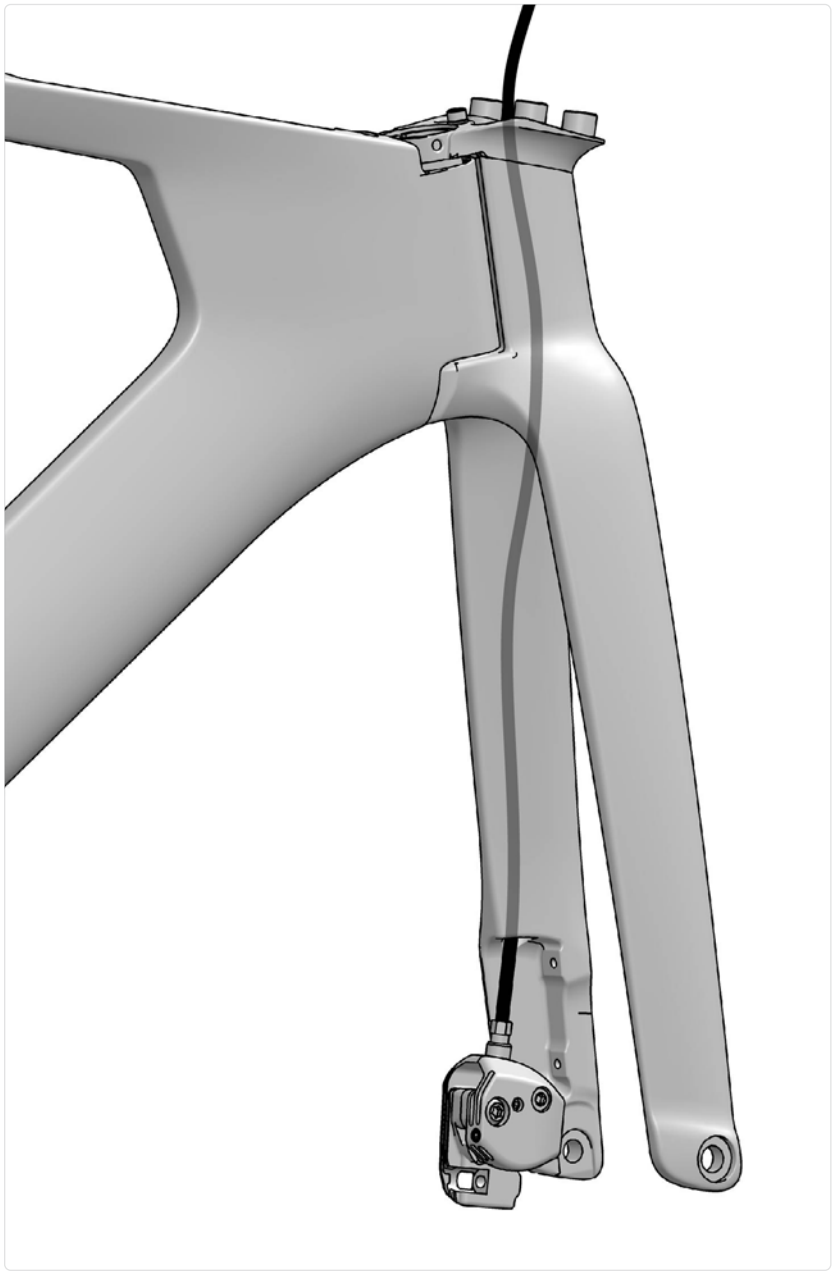

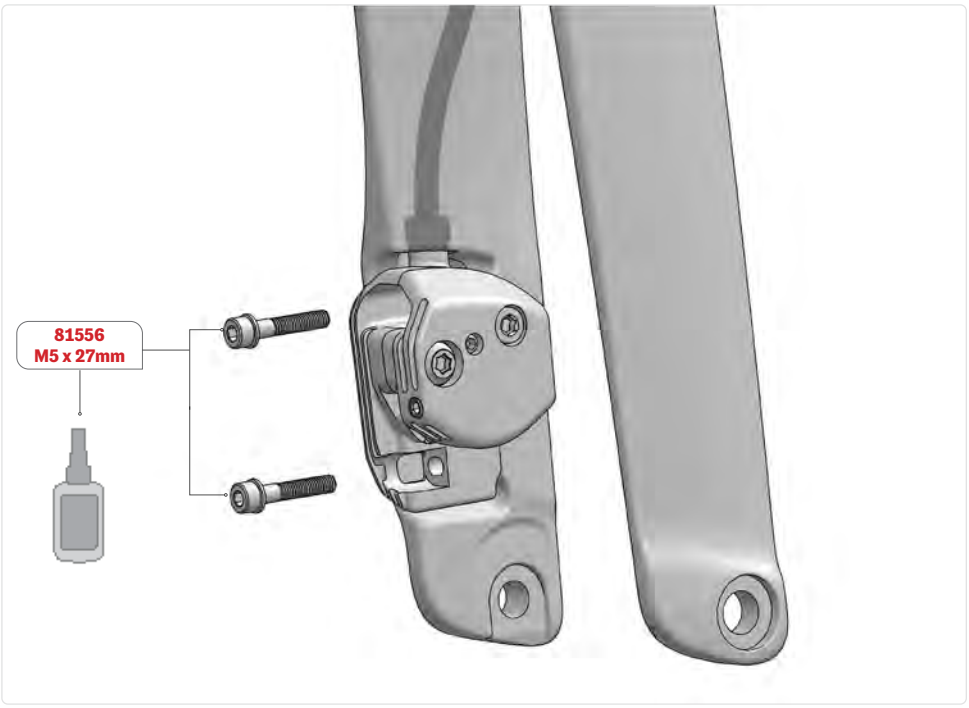

1. Guide the hydraulic housing through the hole in the fork's brake mount recess. It will exit at the top of the fork.
2. Apply threadlocker (no. 242) to the threads of the two M5 x 27 mm front caliper fixing screws (SKU: 81556).
3. Thread both M5 x 27mm screws to fix the caliper to the fork. **Don't tighten yet**.
4. The hydraulic housing can be covered with foam liner (SKU: 80811).

9.2 REAR BRAKE ASSEMBLY



1. Guide the hydraulic housing through the hole in the chainstay, guiding it UNDER the bottom bracket sleeve. It will exit at the bento box hole on the top tube.
2. Apply threadlocker (no. 242) to the threads of the two M5 x 20mm rear caliper fixing screws (SKU: 81550).
3. Thread both M5 x 20mm screws to fix the caliper to the chainstay, don't tighten yet.
4. To avoid rattle inside the frame, the hydraulic housing MUST be covered with foam liner up to the BB shell. (SKU: 80811).

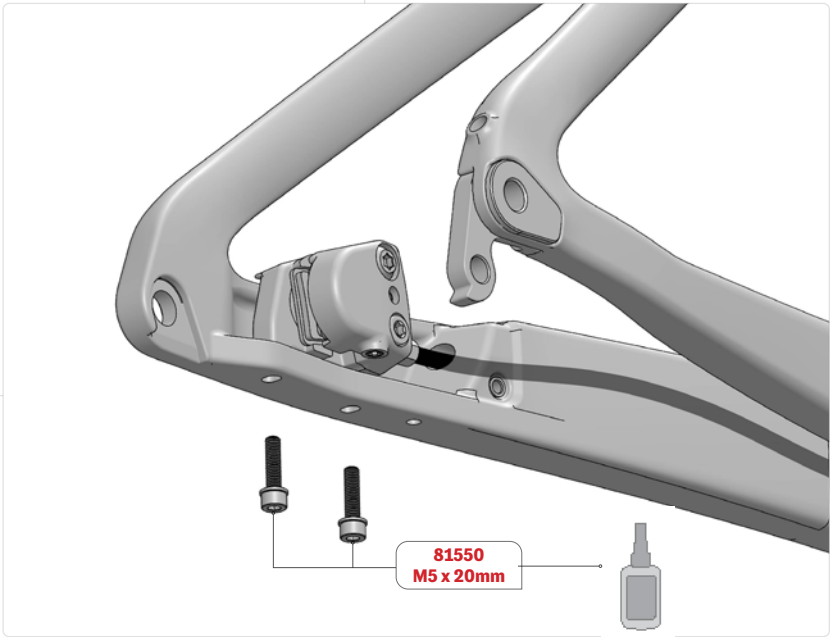

9.3 REAR BRAKE ASSEMBLY

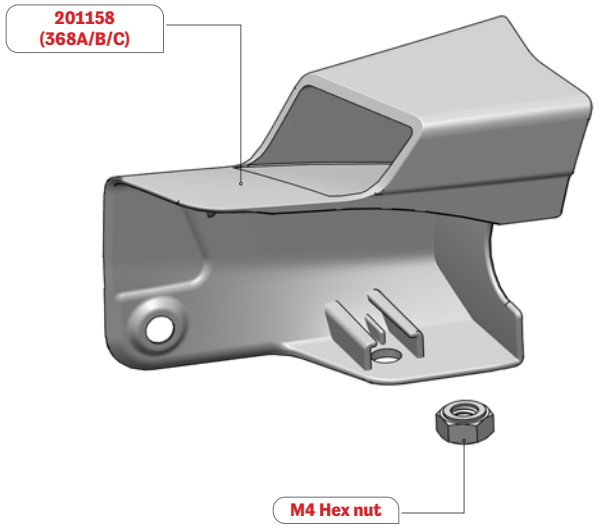

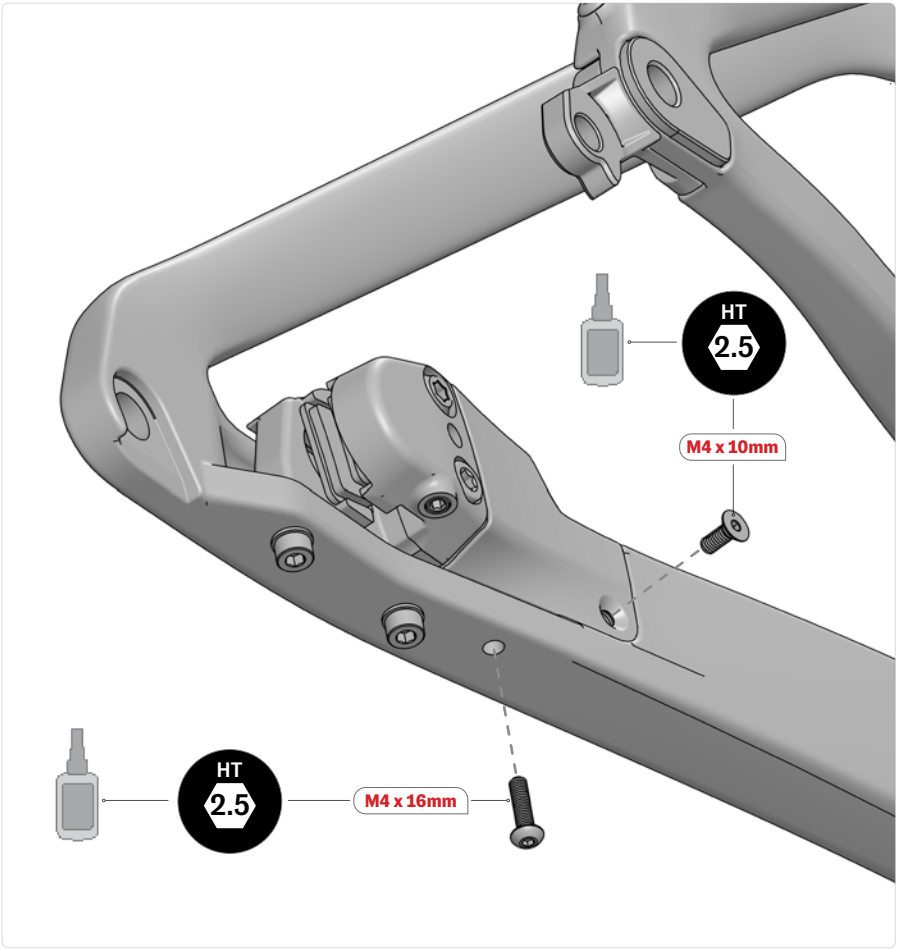

1. Apply grease to the groove of the rear brake cover to help the M4 hex nut stay in place during the assembly.
2. Insert the M4 hex nut into the groove, aligning both sides with the edges of the groove.
3. Install the rear brake cover (SKU: 201158 (368A/B/C)) on the frame.
4. Apply a drop of threadlocker (no. 242) to the threads of the M4 x 10 mm flat head screw.
5. Hand tighten the M4 x 10 mm screw.
6. Apply a drop of threadlocker (no. 242) to the threads the M4 x 16 mm button head screw.
7. Hand tighten the M4 x 16 mm screw. You can move the rear brake cover laterally to ensure a perfect alignment with the rear brake caliper.

10.1 FRAME ROUTING - OVERVIEW - DI2

For eTap routing see page 32.
For mechanical routing see page 37.

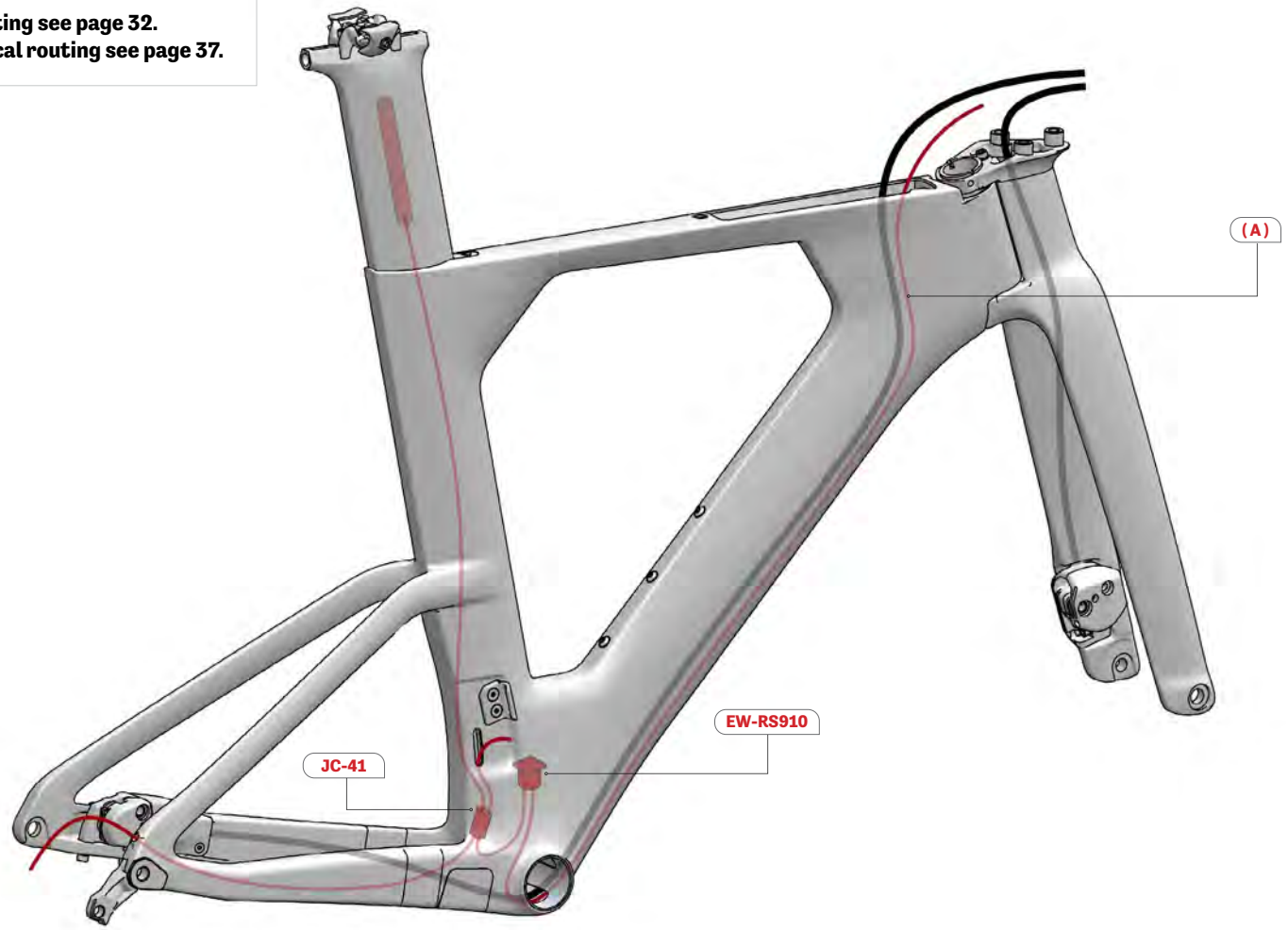

1. The rear brake housing must be routed under the bottom bracket sleeve.
2. The Di2 cable going to the front end must be routed under the bottom bracket sleeve. (A)
3. The JC-41 junction box will rest behind the BB.
4. The rear brake housing **MUST** be covered by a foam liner up to the BB shell. See page 23. (SKU: 80811).

10.2 FRAME ROUTING - OVERVIEW - DI2 (9200-8100)

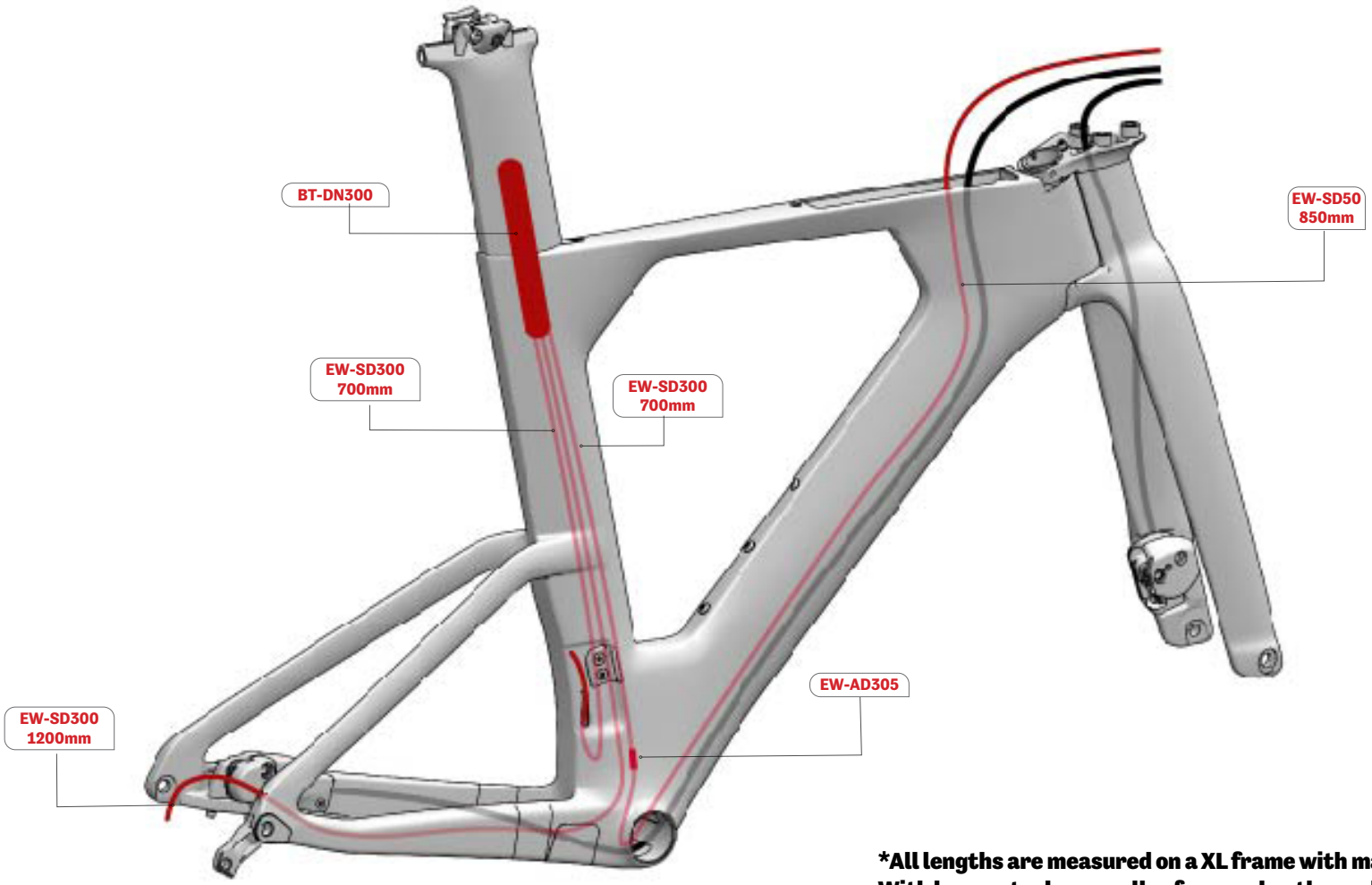

***All lengths are measured on a XL frame with maximum cockpit stack. With lower stack or smaller frame, shorther cables can be used.**

1. The rear brake housing must be routed under the bottom bracket sleeve.
2. The EW-SD50 Di2 cable going to the front end must be routed under the bottom bracket sleeve.
3. The AD305 Conversion Adapter will rest behind the BB.
4. The rear brake housing **MUST** be covered by a foam liner up to the BB shell. See page 23. (SKU: 80811).

10.3 FRAME ROUTING - HANDLEBAR - DI2 (9200-8100)

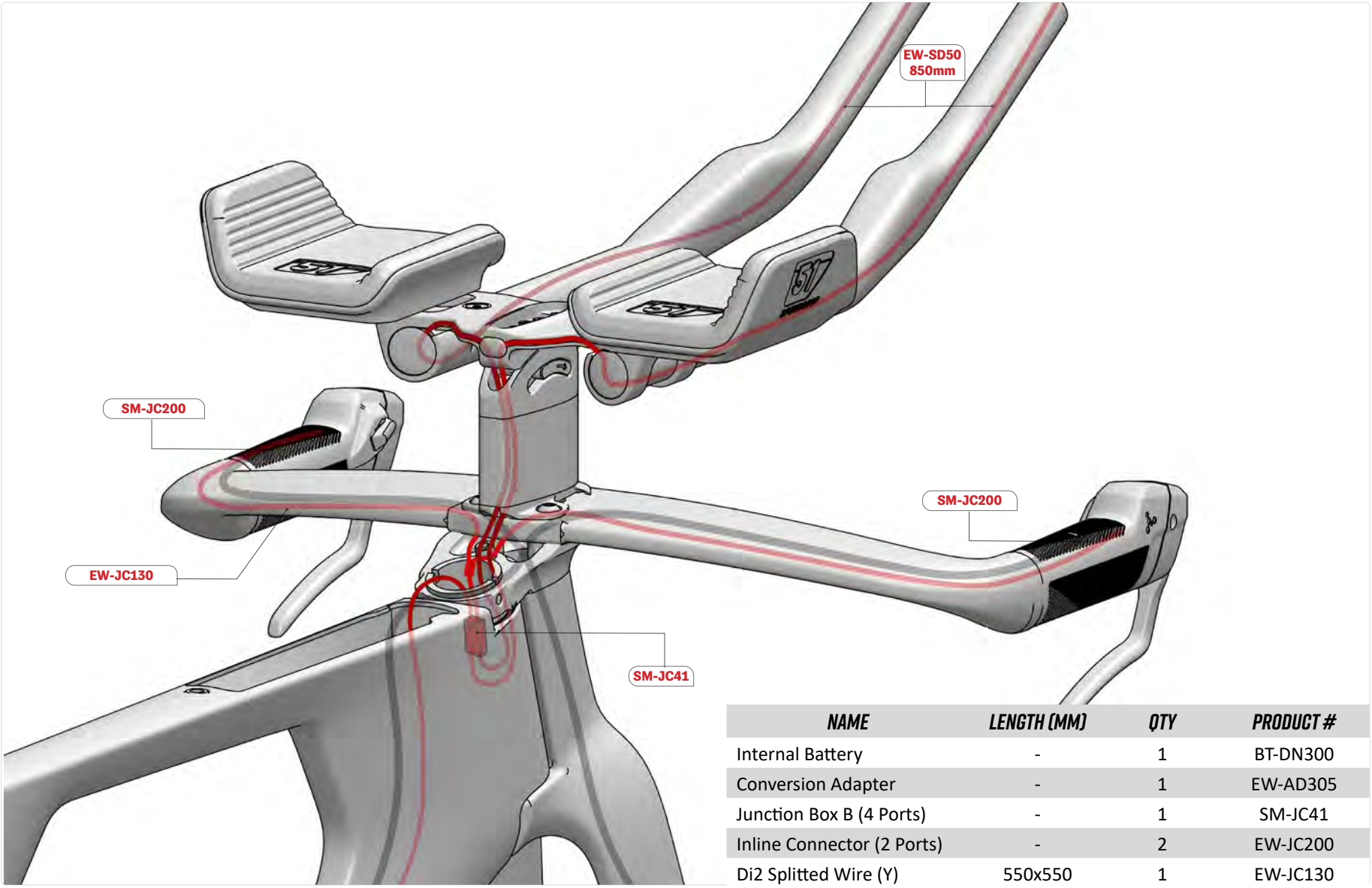

NAME	LENGTH (MM)	QTY	PRODUCT #
Internal Battery	-	1	BT-DN300
Conversion Adapter	-	1	EW-AD305
Junction Box B (4 Ports)	-	1	SM-JC41
Inline Connector (2 Ports)	-	2	EW-JC200
Di2 Splitted Wire (Y)	550x550	1	EW-JC130
Di2 Wire	850	3	EW-SD50-I-850
Di2 Wire	700	2	EW-SD300-I-700
Di2 Wire	1200	1	EW-SD300-I-1200

*All lengths are measured on a XL frame with maximum cockpit stack. With lower stack or smaller frame, shorther cables can be used.

10.4 FRAME ROUTING - DI2

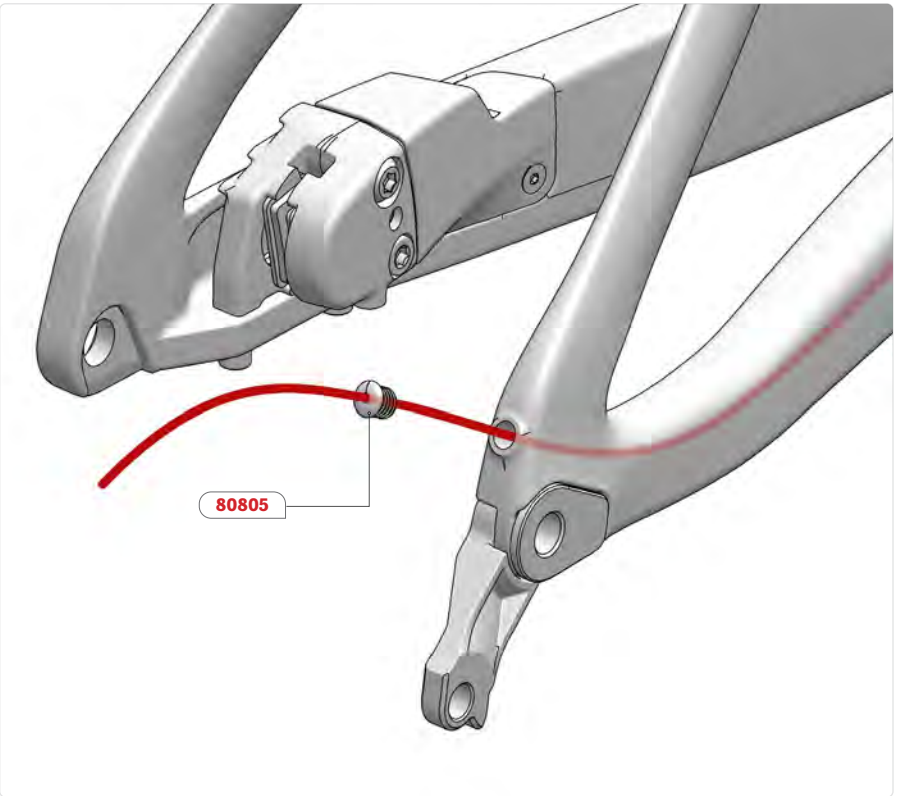

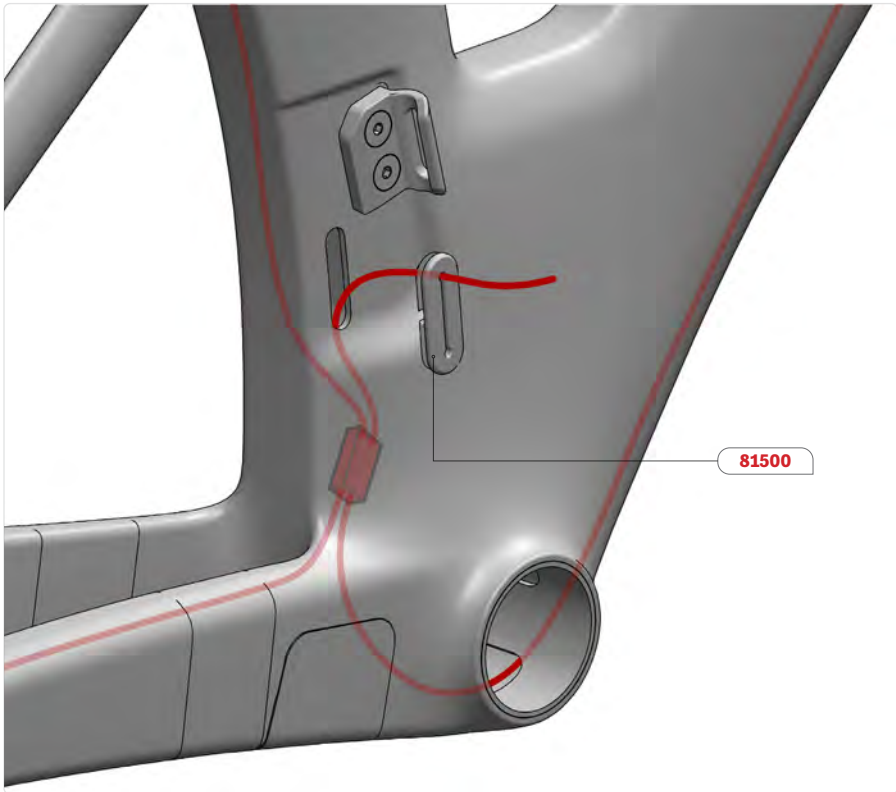

Rear derailleur:

1. Insert the Di2 cable into the rear hole on the seat stay.
2. Guide the Di2 cable until it exits the toolbox hole on the non-drive side.
3. Insert the long Di2 grommet (SKU: 80805) into the seat stay hole.

Front derailleur:

1. Run the Di2 cable through the hole on the drive side of the seat tube until it exits the toolbox hole on the non-drive side.
2. Insert the FD Di2 grommet (SKU: 81500) into the seat tube cable exit hole.

10.5 FRAME ROUTING - DI2

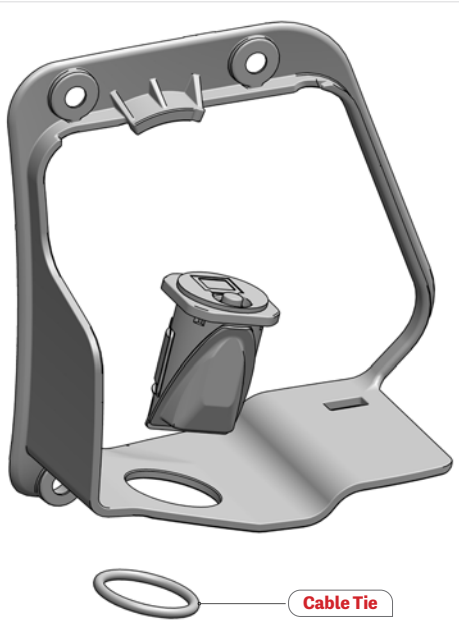

For 9200 and 8100 groupsets, do not use EW-RS910

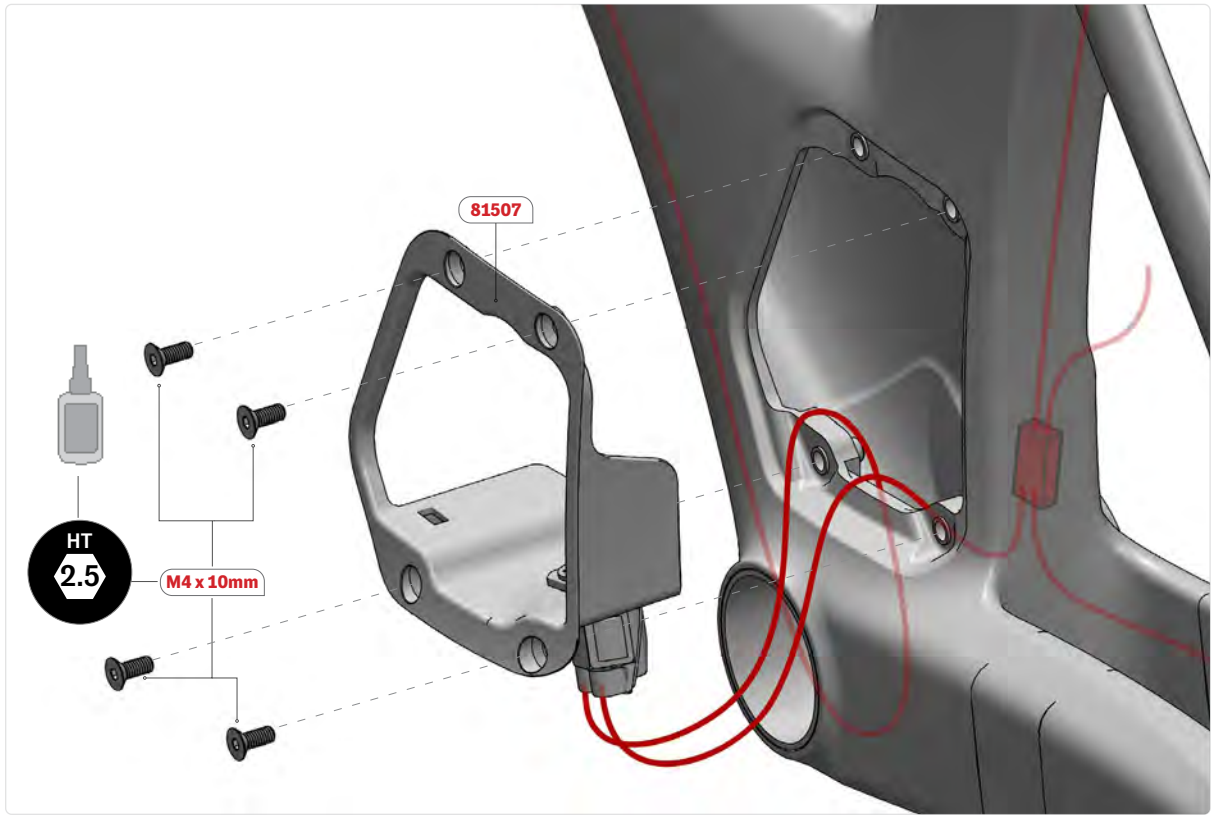

Assembling the EW-RS910 junction box:

1. Insert the EW-RS910 junction box from the top of the door frame receptacle (SKU: 81507).
2. Make sure the charging port is facing the outside of the frame, so that it is accessible once assembled.
3. Place a cable tie around the junction box.
4. Tighten the cable tie with the head in line with the the junction box cavity.
5. Cut the excess cable tie using flush cut pliers.

Assembling the door frame receptacle:

1. Connect the Di2 wire coming from the front end (Routed behind the BB sleeve) to the EW-RS910.
2. Connect the Di2 wire from the battery, the FD and RD to the SM-JC41 junction box.
3. Connect a short Di2 cable to both junction boxes.
4. Place the SM-JC41 junction box behind the BB sleeve.
5. Press the door frame receptacle (SKU: 81507) into place.
6. Apply threadlocker (no. 242) to the threads of the four M4 x 10 mm flat head screws.
7. Hand-tighten the four screws.

10.6 FRAME ROUTING - HANDLEBAR - DI2

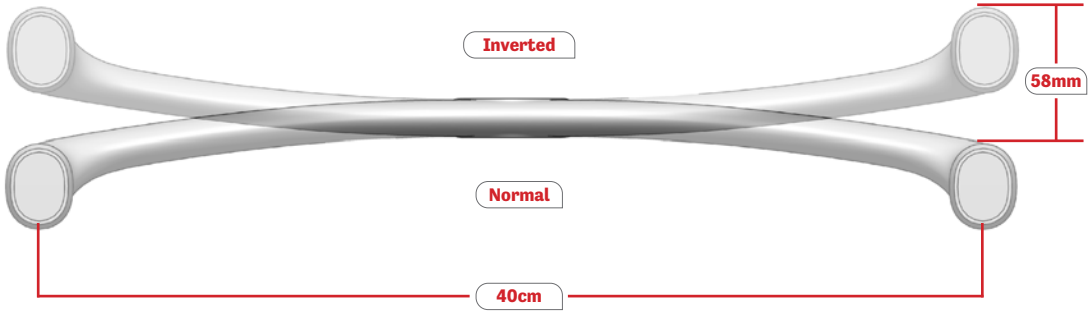

1. The handlebar is reversible: flipping it will raise the hand position by 58mm from the basebar. Choose the handlebar orientation depending of your preference. (See the table below for reference values).
2. The handlebar can be flipped after assembly, but you will need to disconnect the hydraulic brake housing.

STACK HEIGTH	HANDLEBAR ORIENTATION
0 - 70	Normal
60 - 90	Inverted

1. Run the Y-split Di2 cable (EW-JC130-MM) through the oval hole in the handlebar. Each 550mm end must come out on its own side of the handlebar.
2. Run the rear hydraulic brake housing through the desired side of the handlebar. The housing must enter through the oval hole on the underside of the handlebar.
3. Run the front hydraulic brake housing through the desired side of the handlebar. The housing must enter through the oval hole on the underside of the the handlebar.
4. Plug both JC-200 junction boxes into the Di2 splitwire coming out of the handlebar.

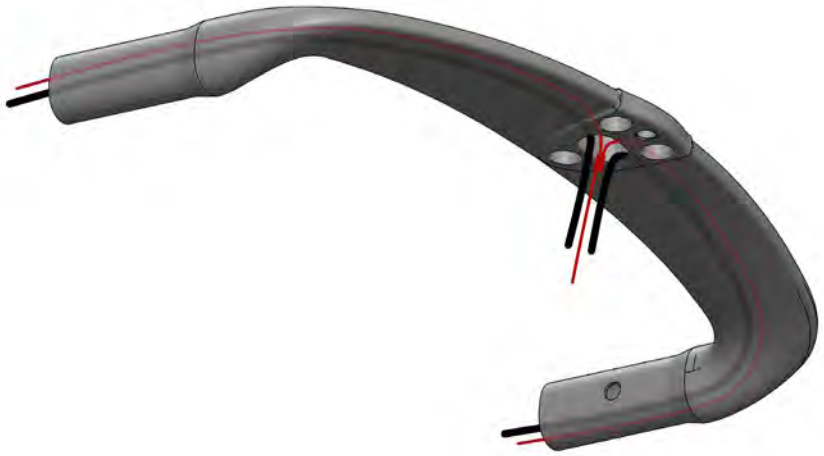

10.7 FRAME ROUTING - HANDLEBAR - DI2

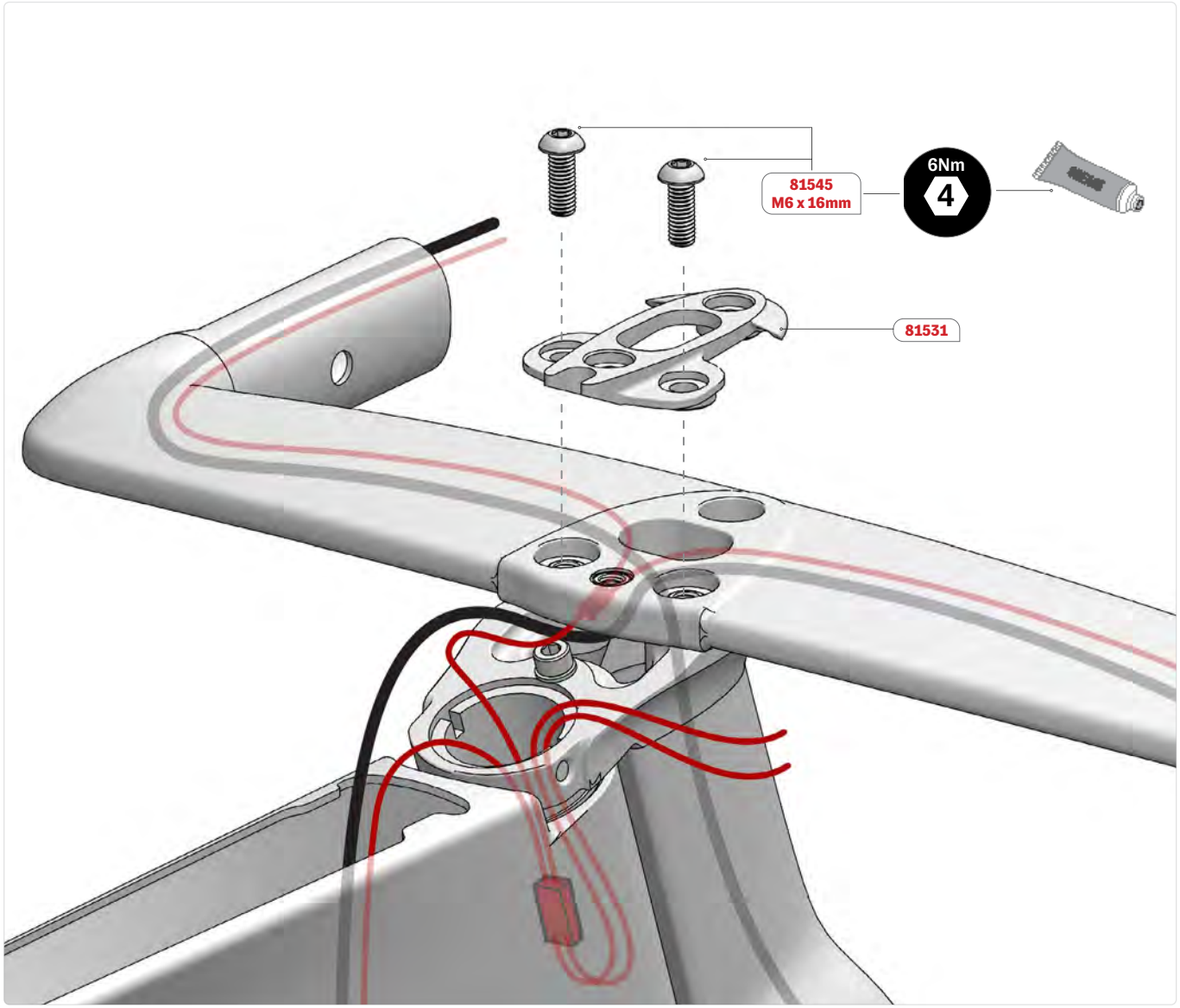

1. Route both brake housings through the handlebar.
2. Connect the Y-split cable to the JC-41 junction box.
3. Connect both Di2 extension cables to the JC-41 junction box.
4. Connect the Di2 cable coming from the frame to the JC-41 junction box.
5. Place the JC-41 junction box inside the steering column. (Leave the extension wires hanging out.)
6. Install the handlebar on the fork.
7. Install the first spacer over the handlebar.
8. Apply grease to the treads of both M6 x 16 mm button head screws (SKU: 81545).
9. Tighten both M6 x 16mm button head screws to 6 Nm.

II.I FRAME ROUTING - OVERVIEW - ETAP

For Di2 routing see page 25.
For mechanical routing see page 37.

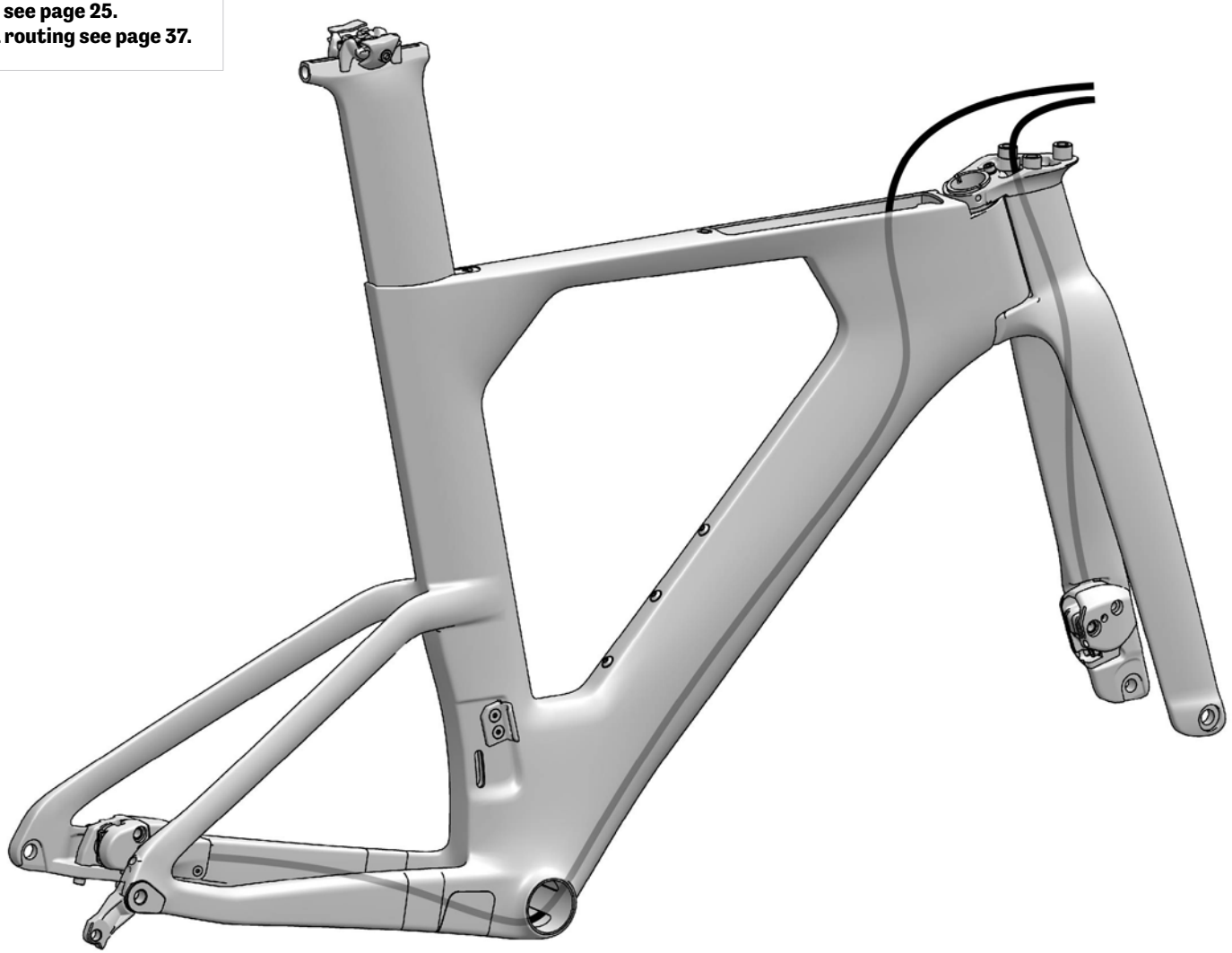

1. Rear brake housing must be routed **UNDER** the bottom bracket sleeve.
2. All housing **MUST** be covered by a foam liner up to the BB shell.
   See page 23. (SKU: 80811).

II.2 FRAME ROUTING – ETAP

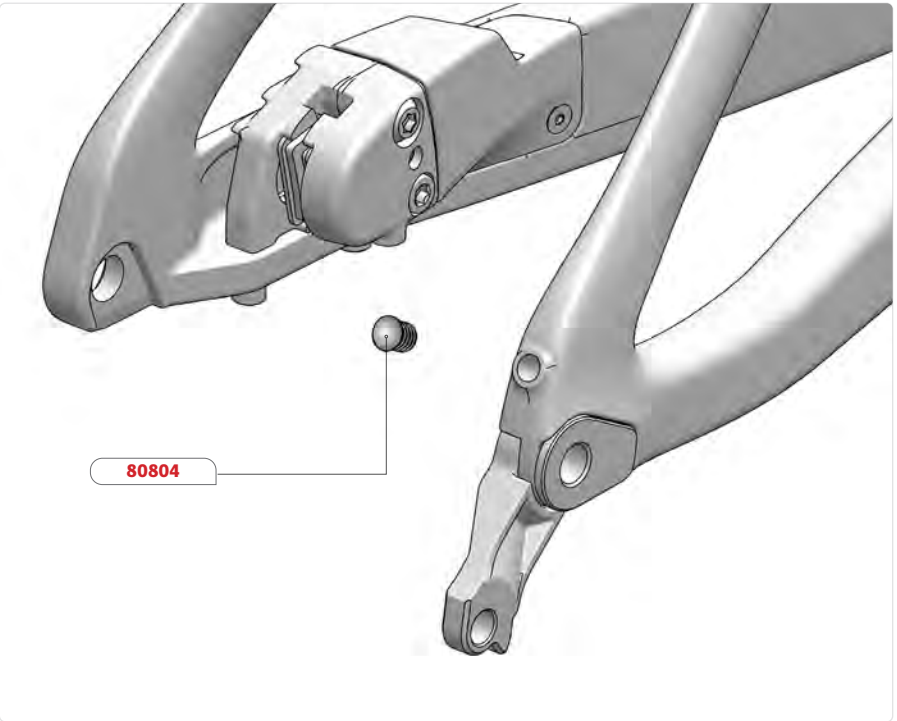

Rear derailleur:

I. Insert the long plug grommet (SKU: 80804) into the seat stay hole.

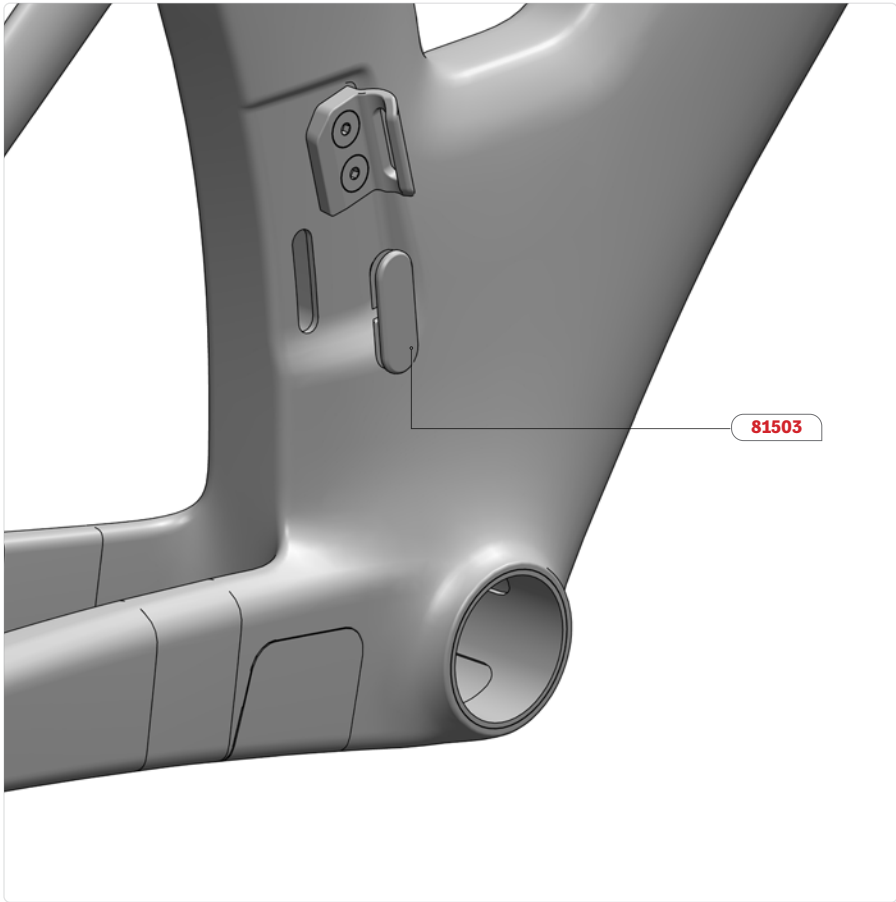

Front derailleur:

I. Insert the FD eTap grommet (SKU: 81503) into the seat tube cable exit hole.

II.3 FRAME ROUTING – ETAP

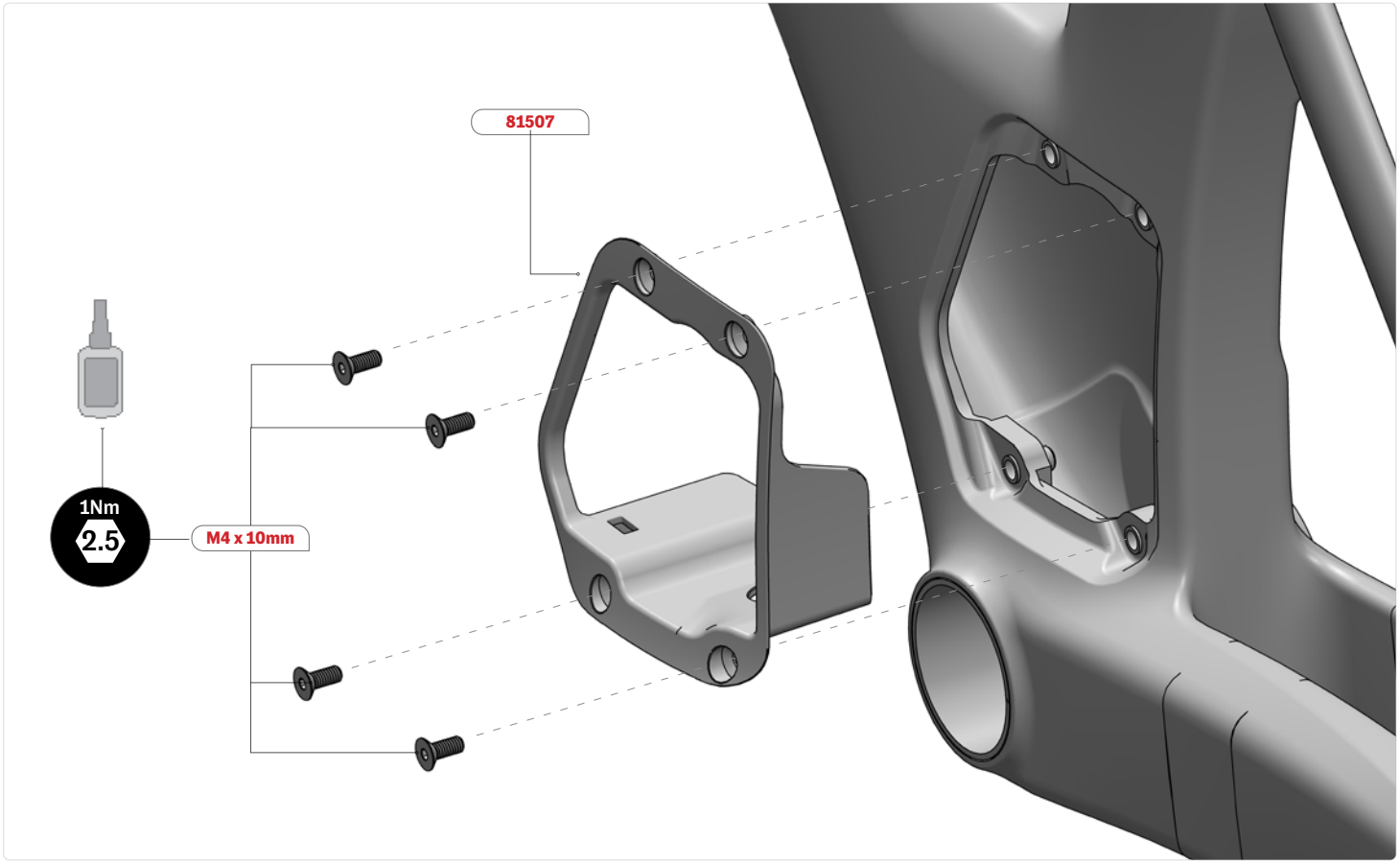

Assembling the door frame receptacle:

1. Set the door frame receptacle (SKU: 81507) in place.
2. Apply threadlocker (no. 242) to the threads of the four M4 x 10 mm flat head screws.
3. Hand-tighten the four screws.

11.4 FRAME ROUTING – HANDLEBAR - ETAP

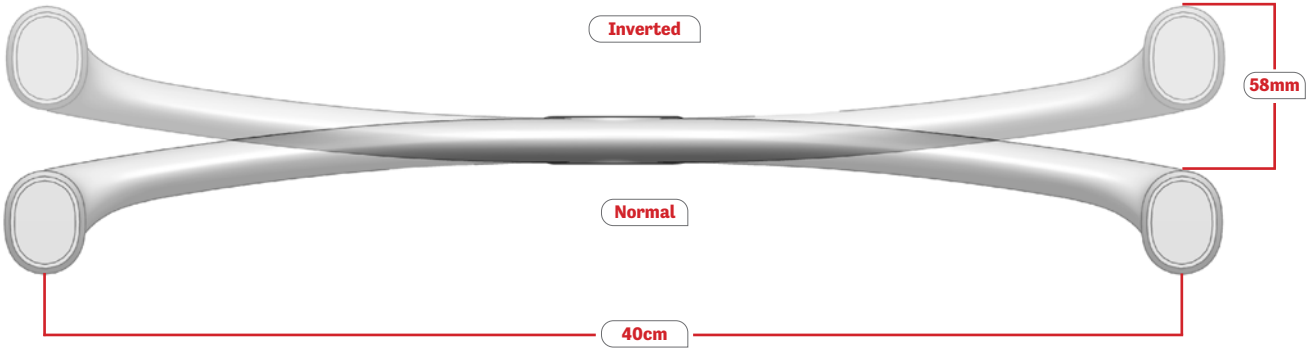

1. The handlebar is reversible: flipping it will raise the hand position by 57.8mm from the basebar. Choose the handlebar orientation you prefer (see the table below for reference values).
2. The handlebar can be flipped after assembly, but you will need to disconnect the hydraulic brake housing.

STACK HEIGTH	HANDLEBAR ORIENTATION
0 - 70	Normal
60 - 90	Inverted

1. Choose the SRAM eTap shifter adapter (included in SKU: 81514).
2. Slide the multiclic shifter through the SRAM eTap shifter adapter, aligning both grooves of the shifter with the rail in the adapter
3. Run both multiclic shifter cables through the handlebar. Both cables must exit through the oval hole on the underside of the handlebar.
4. Run the rear hydraulic brake housing through the desired side of the handlebar. The housing must exit through the oval hole on the underside of the handlebar.
5. Run the front hydraulic brake housing through the desired side of the handlebar. The housing must exit through the oval hole on the underside the handlebar.

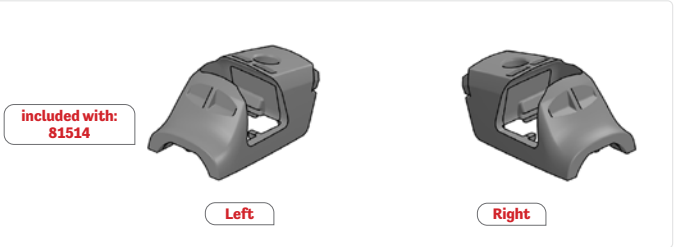

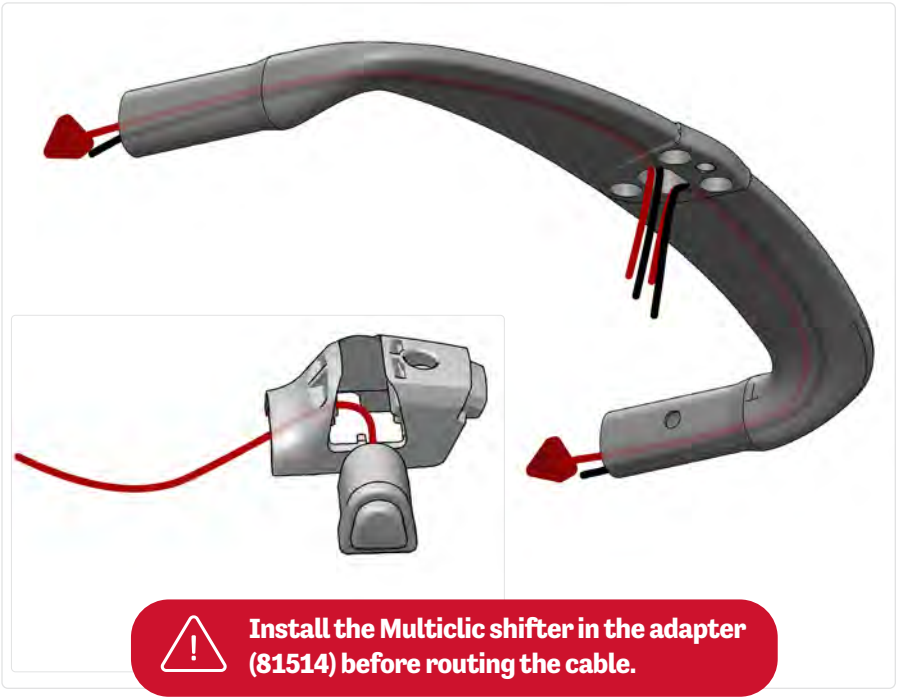

Install the Multiclic shifter in the adapter (81514) before routing the cable.

II.5 FRAME ROUTING - HANDLEBAR - ETAP

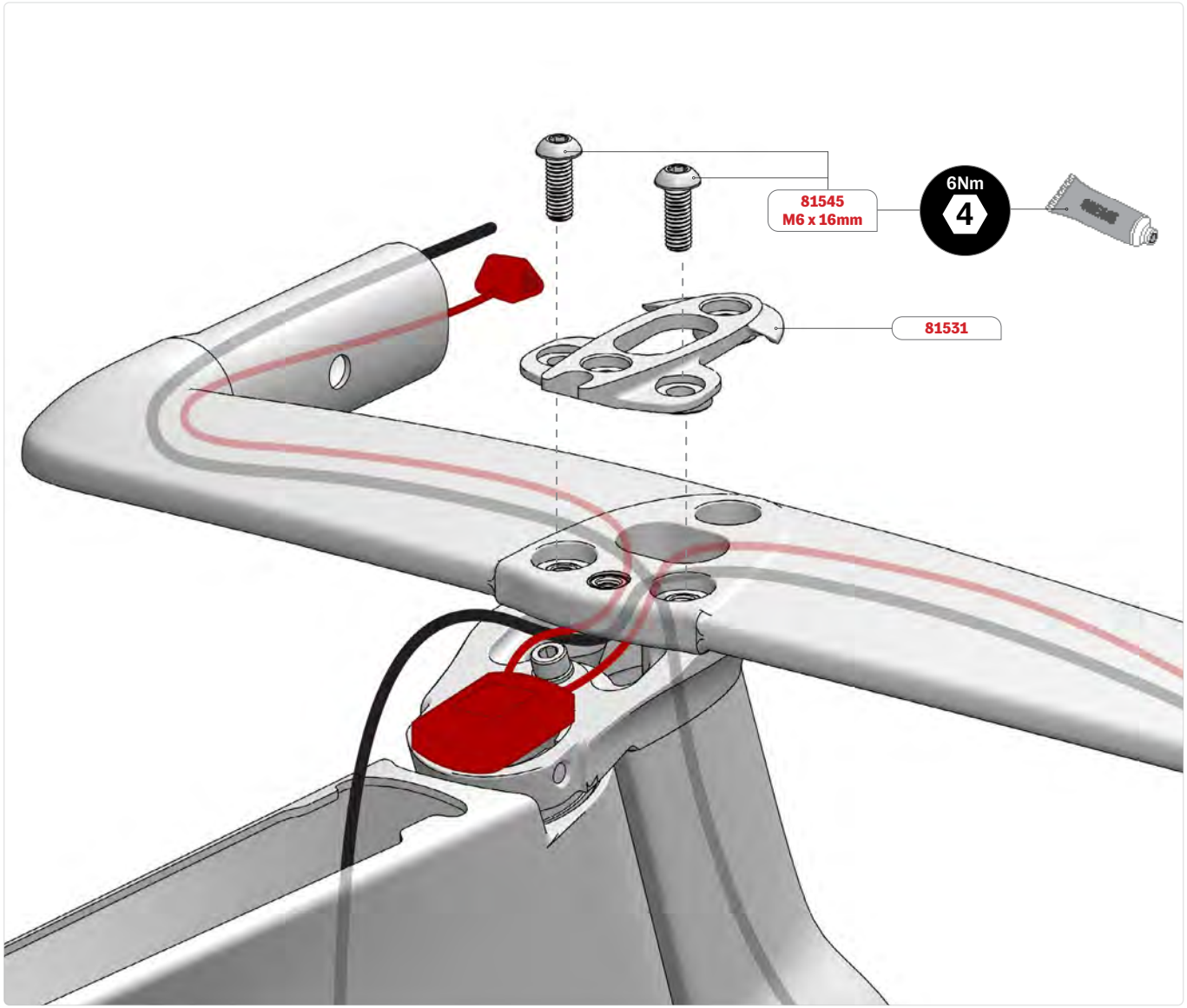

1. Run both brake housings through the handlebar.
2. Set the handlebar onto the fork, making sure cables are not in between the handlebar and the fork.
3. Set the first spacer onto the handlebar.
4. Apply grease to the treads of both M6 x 16 mm button head screws (SKU: 81545).
5. Tighten both M6 x 16 mm button head screws to 6 Nm.

12.1 FRAME ROUTING – OVERVIEW - MECHANICAL

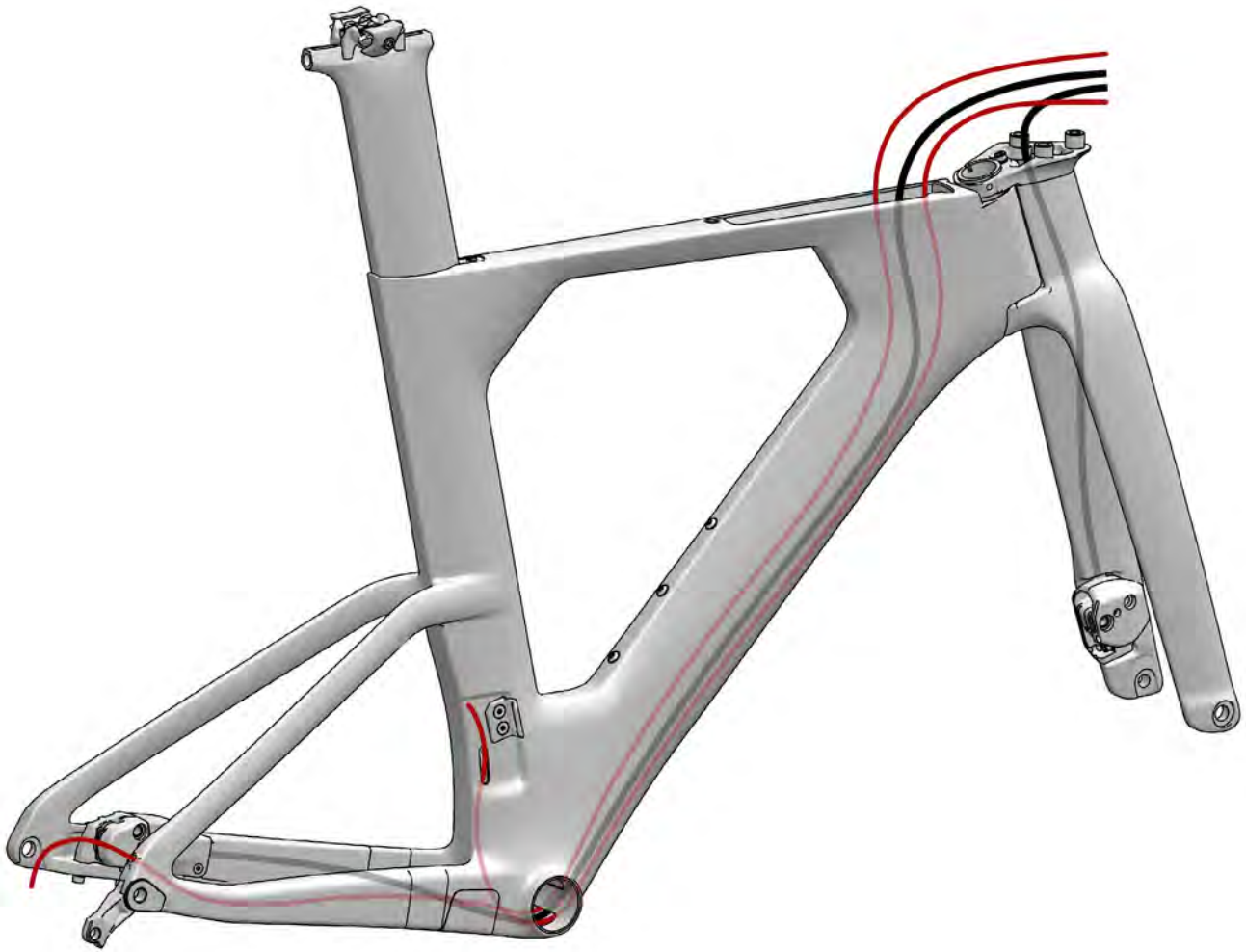

1. The rear brake housing must be routed under the bottom bracket sleeve.
2. Both derailleur cable housings will be UNDER the bottom bracket sleeve once installed.
3. All housings MUST be covered by a foam liner from BB shell up to the bento box. See page 23. (SKU: 80811).

12.2 FRAME ROUTING - MECHANICAL

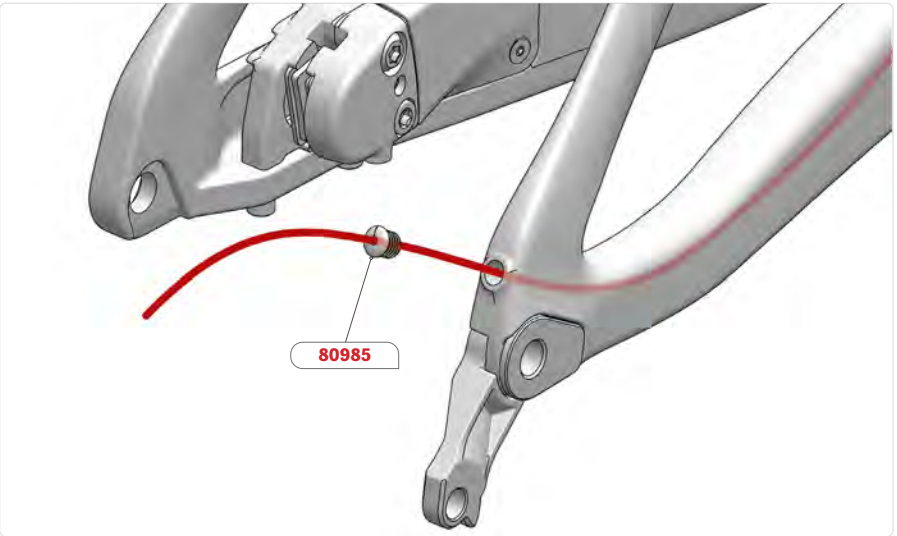

Rear derailleur:

1. Insert the rear derailleur housing into the rear hole on the drive side seatstay. (Prekink the housing to ease the routing under the BB sleeve)
2. Guide the rear derailleur housing under the BB sleeve until it exits from the bento box opening on the top tube.
3. Insert the long grommet mechanical (SKU: 80985) into the hole on the seatstay.

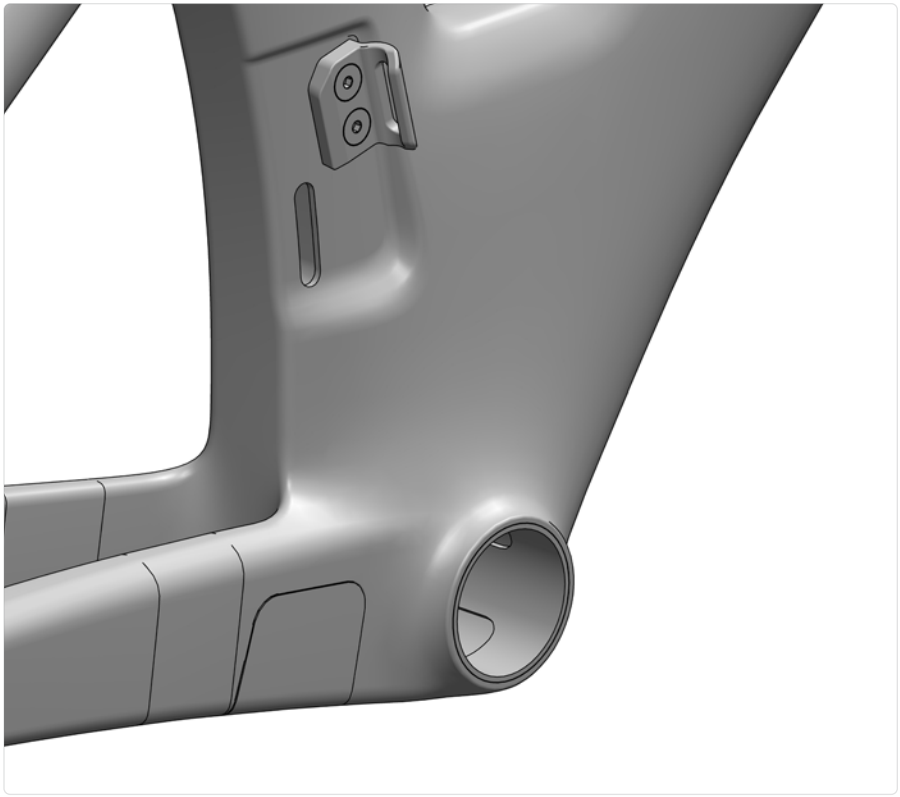

Front derailleur with full housing:

1. Insert the front derailleur housing into the hole on the drive side of the seat tube. (Prekink the housing to ease the routing under the BB sleeve.)
2. Guide the front derailleur housing under the BB sleeve until it comes out from the bento box opening on the top tube.

12.3 FRAME ROUTING - MECHANICAL

Assembling the door frame receptacle:

1. Press the door frame receptacle (SKU: 81507) into place.
2. Apply threadlocker (no. 242) to the threads of the four M4 x 10 mm flat head screws.
3. Hand-tighten the four screws.

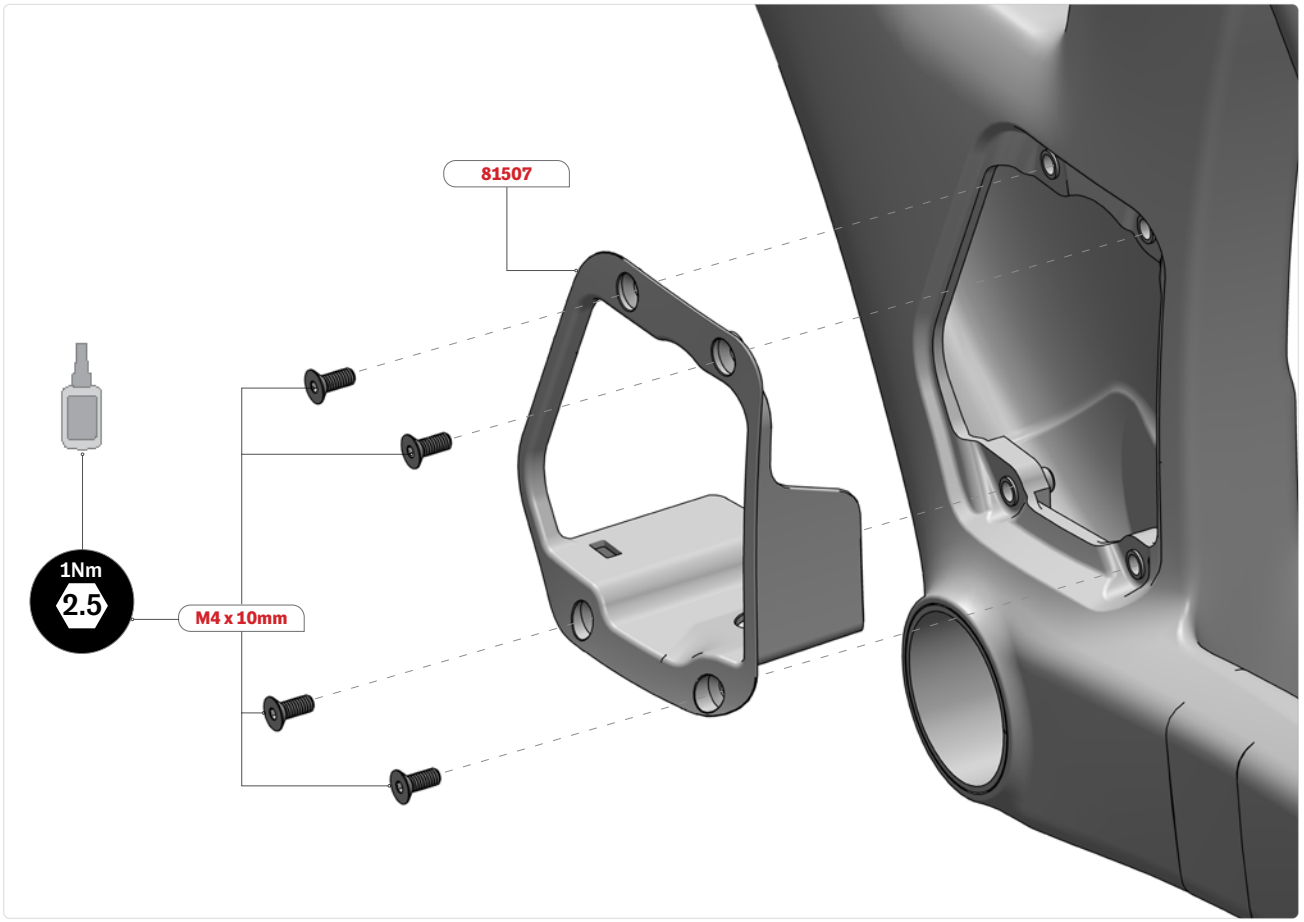

12.4 FRAME ROUTING - HANDLEBAR - MECHANICAL

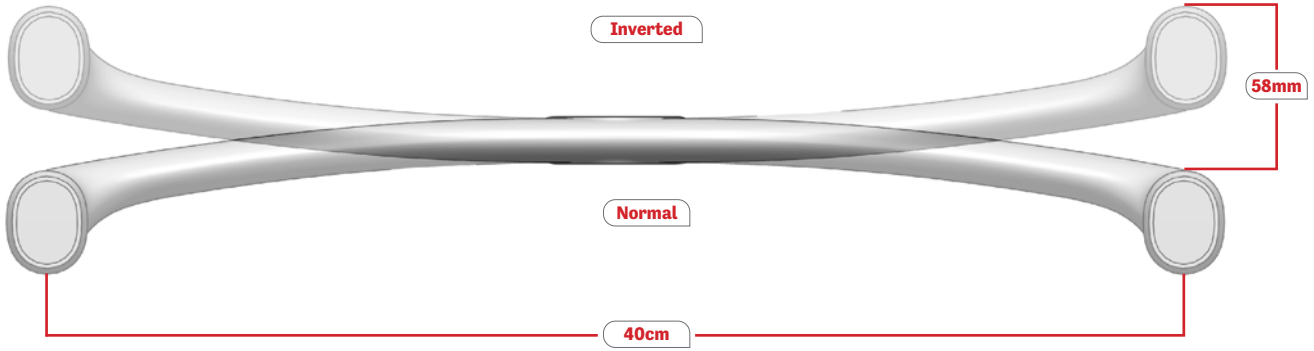

1. The handlebar is reversible: flipping it will raise the hand position by 58mm from the basebar. Choose the handlebar orientation depending of your preference. (See the table below for reference values).
2. The handlebar can be flipped after assembly, but you will need to disconnect the hydraulic brake housing.

STACK HEIGTH	HANDLEBAR ORIENTATION
0 - 70	Normal
60 - 90	Inverted

1. Run the rear hydraulic brake housing through the desired side of the handlebar.
2. Run the front hydraulic brake housing through the desired side of the handlebar.

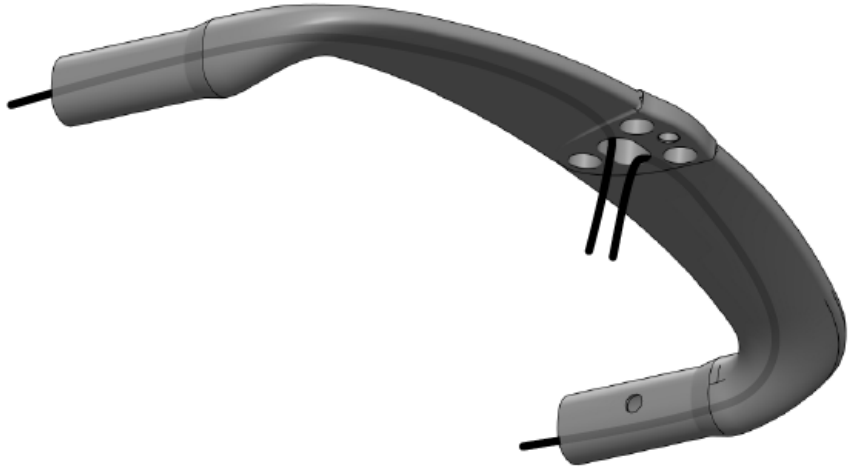

12.5 FRAME ROUTING - HANDLEBAR - MECHANICAL

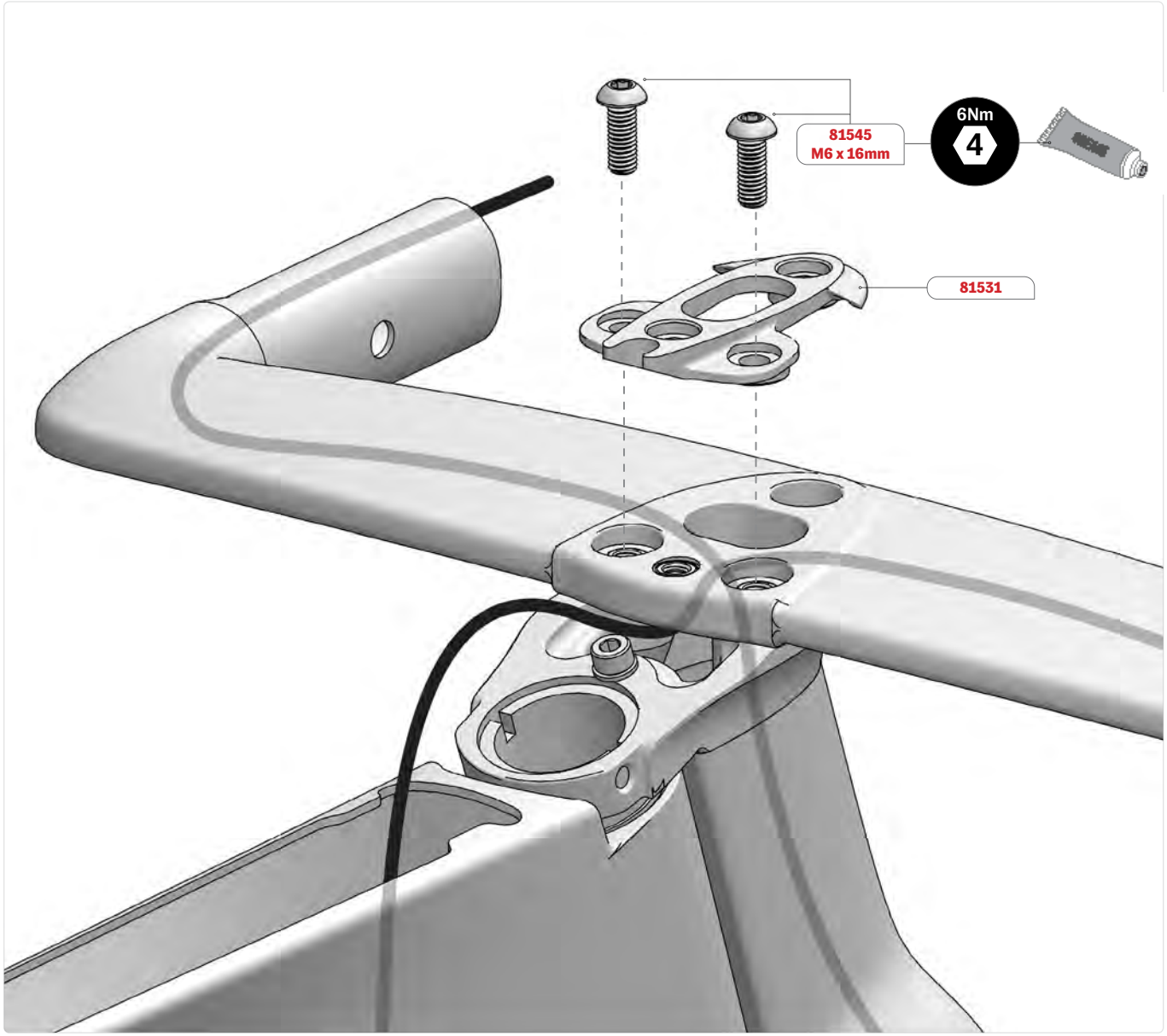

1. Run both brake housings through the handlebar.
2. Set the handlebar onto the fork.
3. Set the first spacer onto the handlebar.
4. Apply grease to the threads of both M6 x 16 mm button head screws (SKU: 81545).
5. Tighten both M6 x 16 mm button head screws to 6 Nm.

13.1 BRAKE LEVER ASSEMBLY - WEDGE PREPARATION

Right Lever

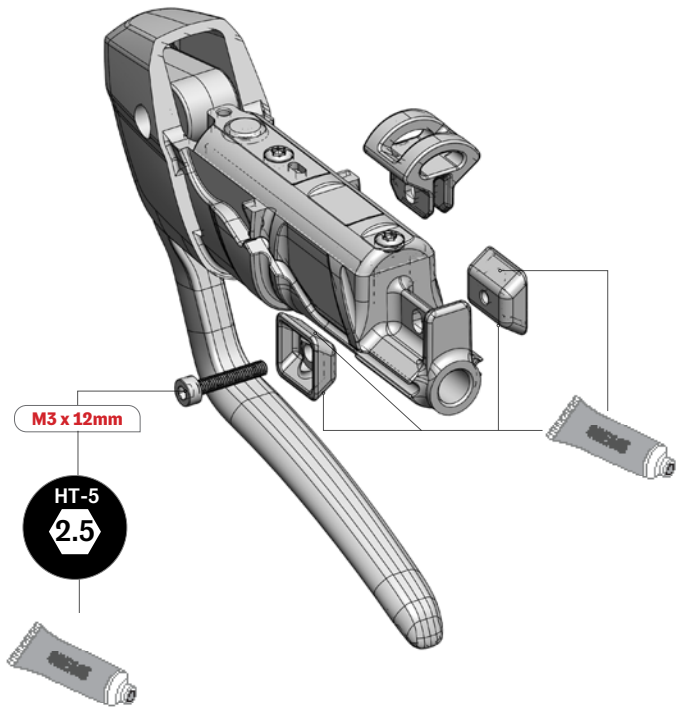

The wedge is already assembled on the brake lever (SKU: 81551).

1. Unscrew the M3 x 12mm screw to dismantle the brake lever wedge assembly (SKU: 81553).
2. Apply grease to all angled surfaces of both wedges.
3. Apply grease to the threads of the M3 x 12 mm socket head screw.
4. Insert the M3 x 12 mm screw onto the inner side of the lever.
5. Tighten the screw approximately 5 turns to hold the assembly.
6. Repeat for the other side of the brake lever.

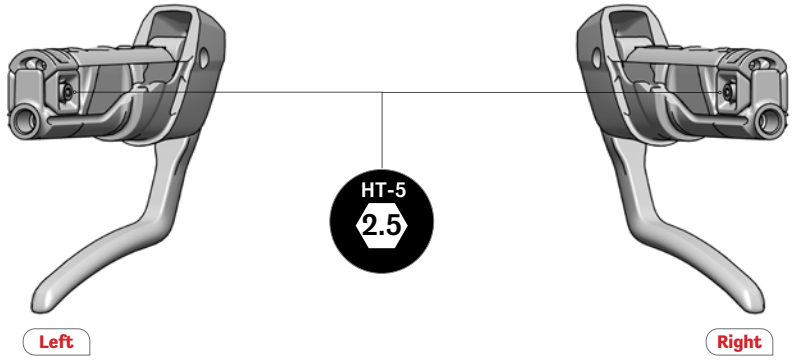

The brake lever is reversible. The M3 x 12 mm socket head screw head needs to be on the **INNER SIDE** of the lever to align with the access hole on the handlebar.

13.2 BRAKE LEVER ASSEMBLY - ADAPTER FOR DI2 ROUTING



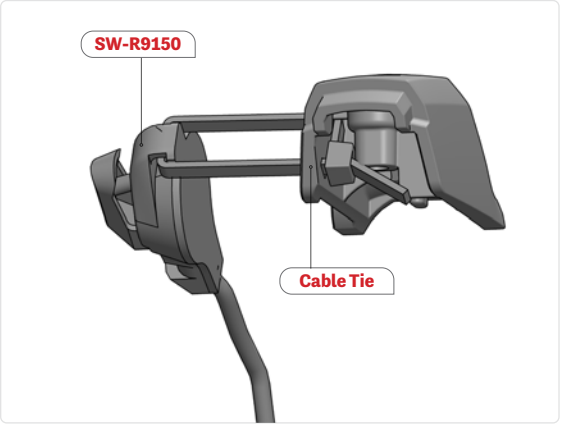

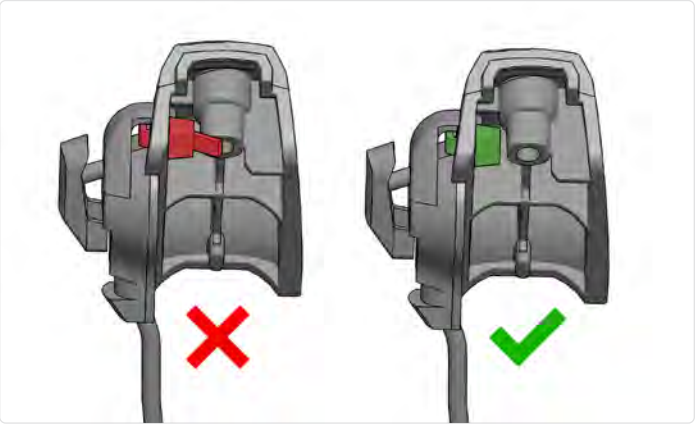

1. Choose the Di2 sprint shifter adapter (included in SKU: 81513).
2. Insert the cable tie into the upper hole on the inside of the Di2 sprint shifter adapter.
3. Choose the right SW-R9150 sprint shifter for the adapter side you are assembling.
4. Run the cable tie through the SW-R9150.
5. Run the cable tie through the lower hole of the Di2 sprint shifter adapter.
6. Tighten the cable tie. The head must lie flat on the inside of the Di2 sprint shifter adapter.
7. Cut the excess cable tie flush with the head using flush cut pliers.
8. Set the Di2 sprint shifter adapter assembly into the brake lever. The shifter must be on the same side as the M3 x 12 mm wedge screw head.
9. Apply grease to the threads of the M3 x 12 mm adapter screw.
10. Hand-tighten the M3 x 12 mm screw in the shifter.
11. Run the shifter cable through the cable groove on the lever.
12. Repeat for the other side.

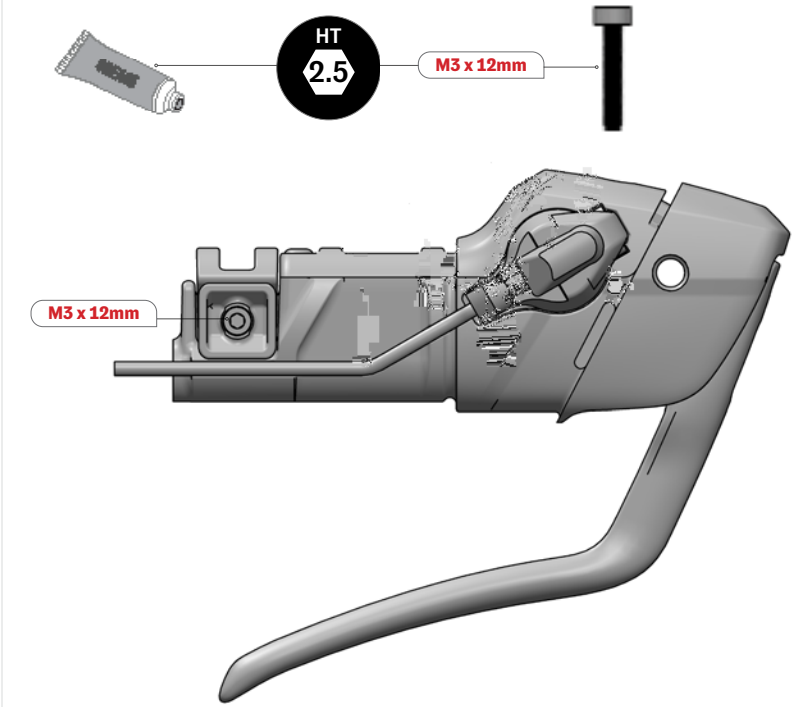

13.3 BRAKE LEVER ASSEMBLY - ADAPTER FOR ETAP ROUTING

1. Install the SRAM eTap AXS Wireless Blips shifter adapter assembly on the brake lever.
2. Apply grease to the threads of the M3 x 8 mm adapter screw.
3. Hand-tighten the M3 x 8 mm screw in the shifter.
4. Install the adhesive sheet supplied with the SRAM eTap AXS Wireless Blips on the shifter.
5. Install the SRAM eTap AXS Wireless Blips shifter in the adaptor. Insert the wider part first and push the front end until the SRAM eTap AXS Wireless Blips is secured.
6. Repeat for the other side.

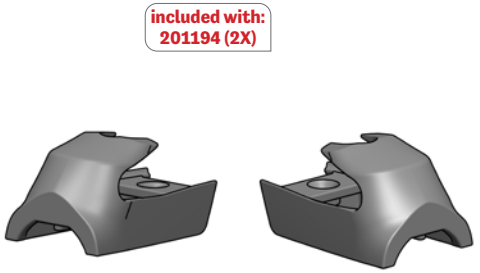

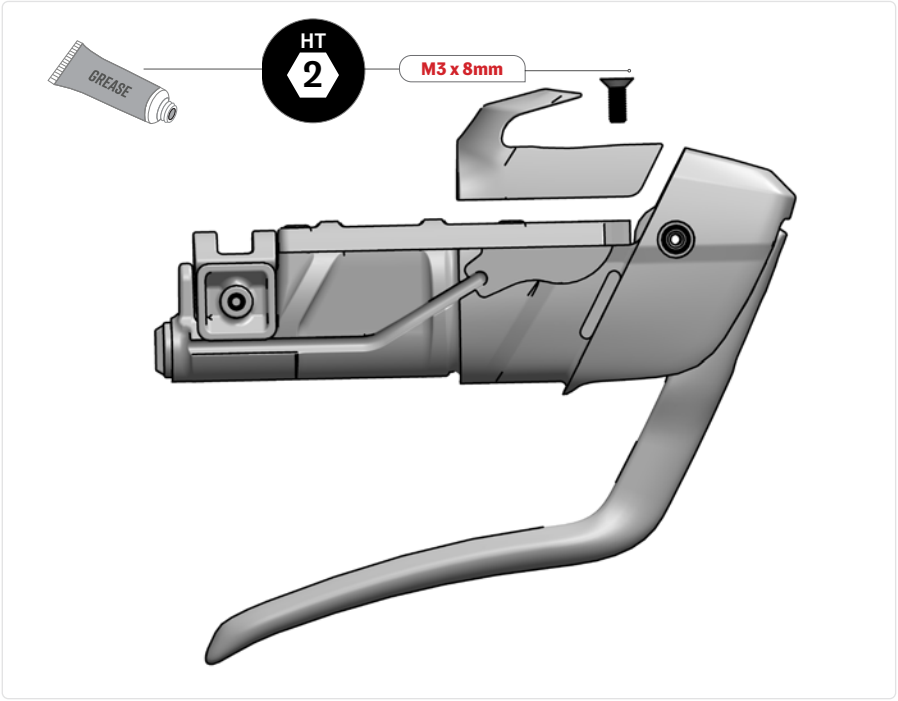

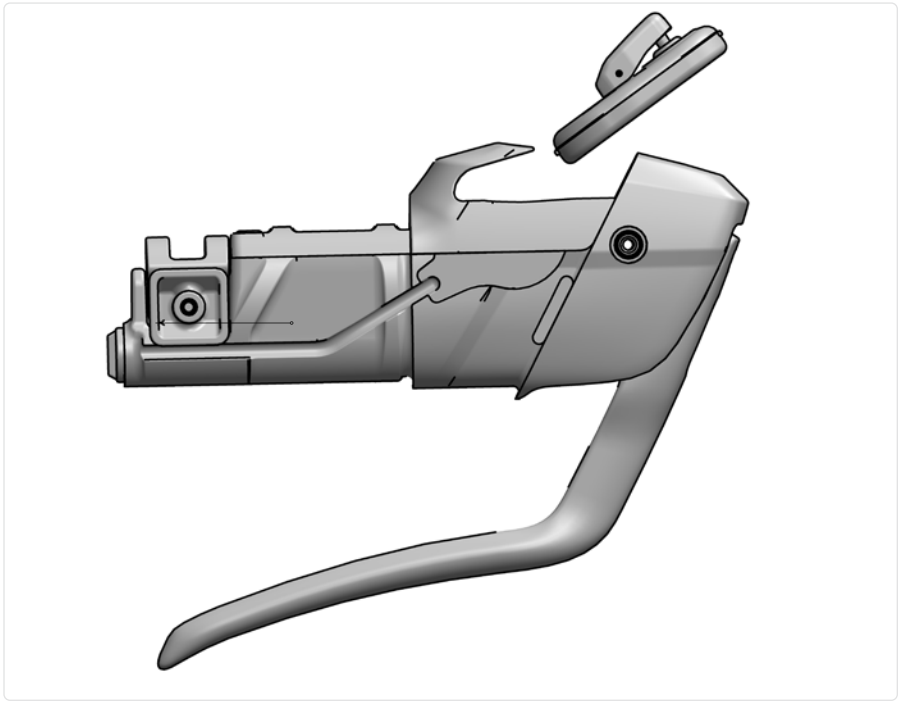

13.4 BRAKE LEVER ASSEMBLY - ADAPTER FOR MECHANICAL ROUTING

Included with:
81512 (2X)

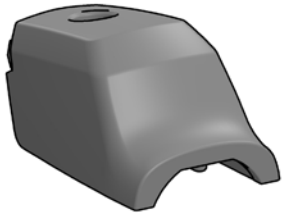

1. Choose the blank mechanical adapter (included in SKU: 81512).
2. The blank mechanical adapter is reversible. It can be installed on either brake lever.
3. Set the blank mechanical adapter on the brake lever.
4. Apply grease to the threads of the M3 x 12 mm adapter screw.
5. Hand-tighten the M3 x 12 mm screw in the shifter.
6. Repeat for the other side.

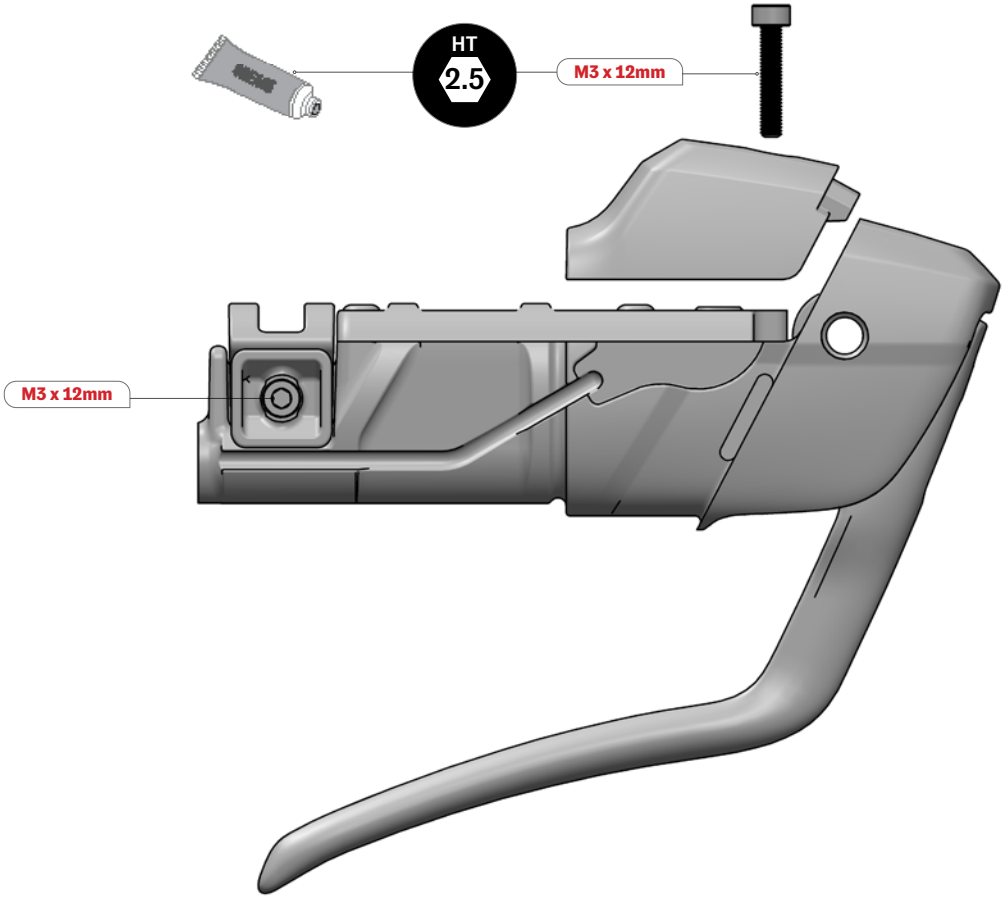

13.5 BRAKE LEVER ASSEMBLY

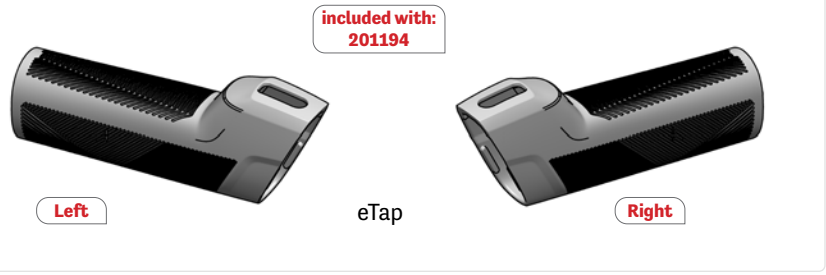



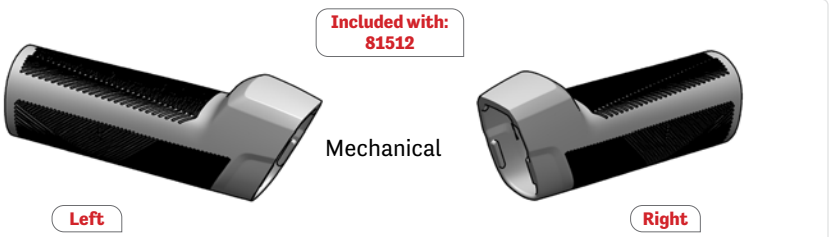



1. Choose the correct handle kit for your build: mechanical (included in SKU: 81512), Di2 (included in SKU: 81513) or eTap (included in SKU: 201194)
2. Insert the right handle into the right side of the handlebar.
3. Slide it in until the hole is aligned with the hole in the handlebar. Isopropyl alcohol can be used to slide the handle in if an air compressor isn't availlable.
4. Repeat for the left handle on the left side of the handlebar.
5. Fold the handle back on itself until the end of the handlebar is visible.

13.6 BRAKE LEVER ASSEMBLY

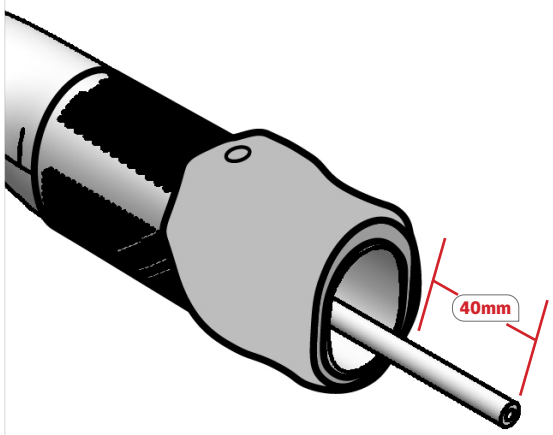

Rear

FRAME SIZE	L (MM)
XS	50
S	55
M-XL	60

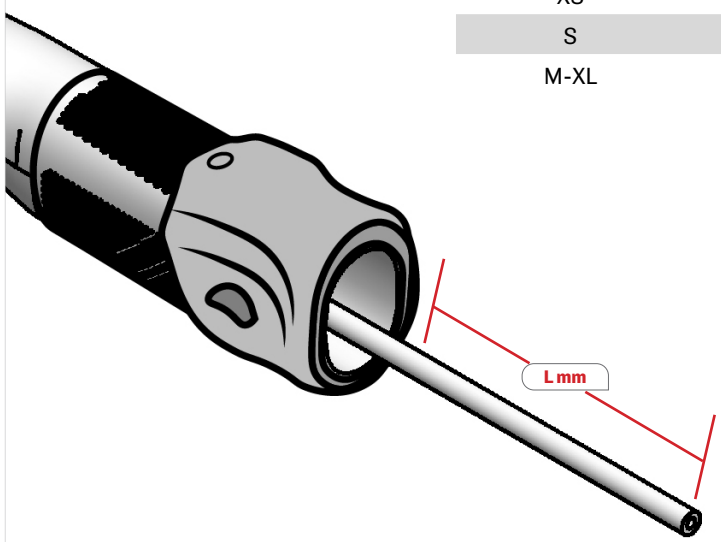

Front

1. Using a hydraulic hose cutter, cut the rear hydraulic hose 40mm from handlebar end.
2. Using a hydraulic hose cutter, cut the front hydraulic hose 60mm from handlebar end.
3. Make sure both cuts are flat and free of burrs. If they aren't, replace the blade of the hose cutter.

***Lengths indicated are to allow the handlebar to be positioned for shipping in a travel bike box.**

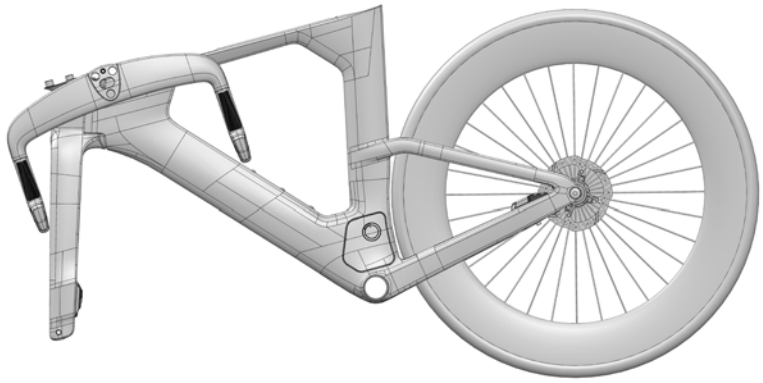

13.7 BRAKE LEVER ASSEMBLY

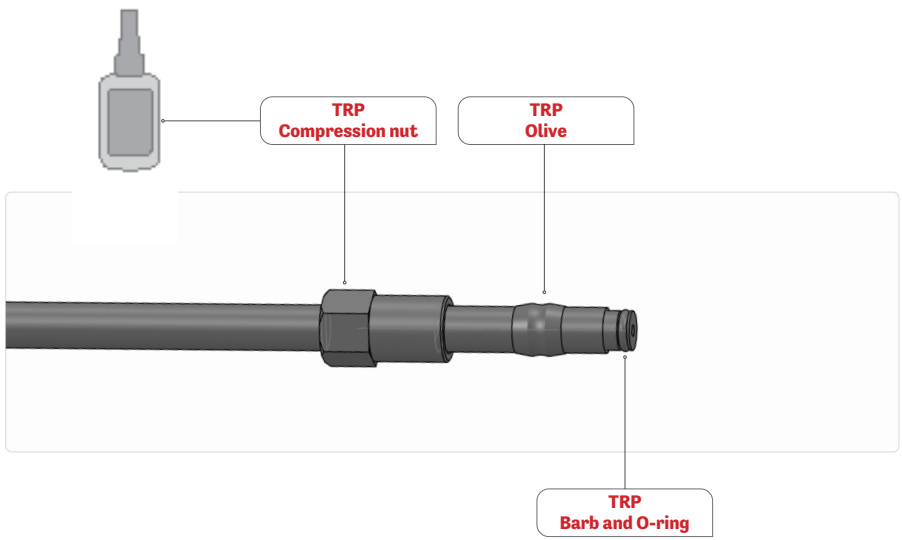

1. Using a hydraulic barb compression tool, press the TRP barb into place in the hydraulic hose.
2. Make sure the O-ring is installed and the barb is flush against the hydraulic hose.
3. Slide the TRP compression nut onto the hydraulic hose.
4. Slide the TRP olive onto the hydraulic hose.
5. Push the hydraulic hose all the way into the lever until it stops.
6. Screw the TRP compression nut on, and thighten to 5-7 Nm.
7. Repeat for the second brake lever.

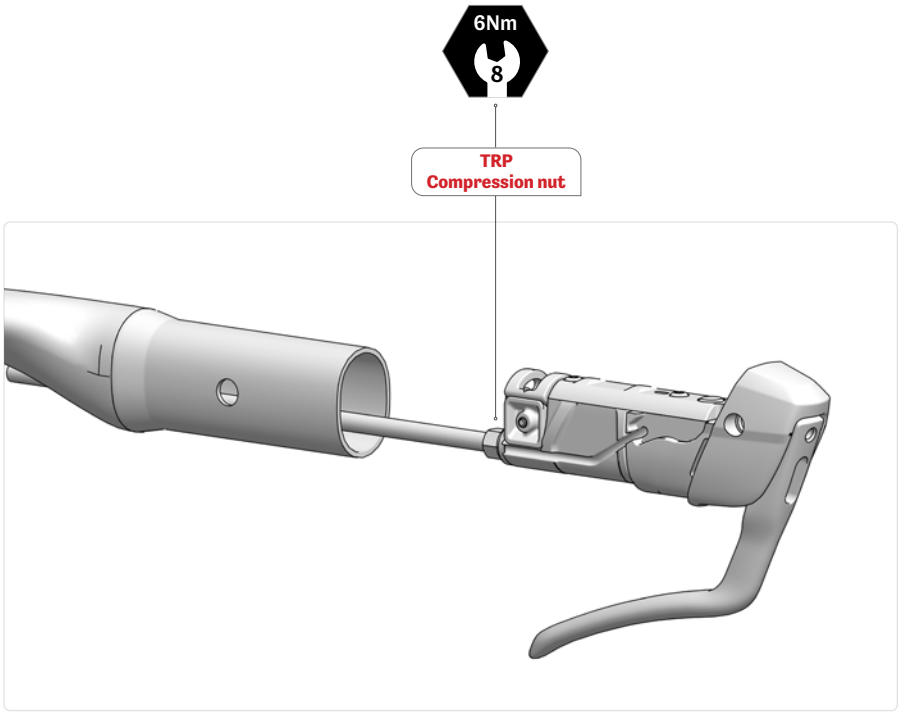

TRP replacement part, available at :

https://trpcycling.com/product/olive-and-barb-10-pack/

TRP barbs & pins **5 mm**



13.8 BRAKE LEVER ASSEMBLY

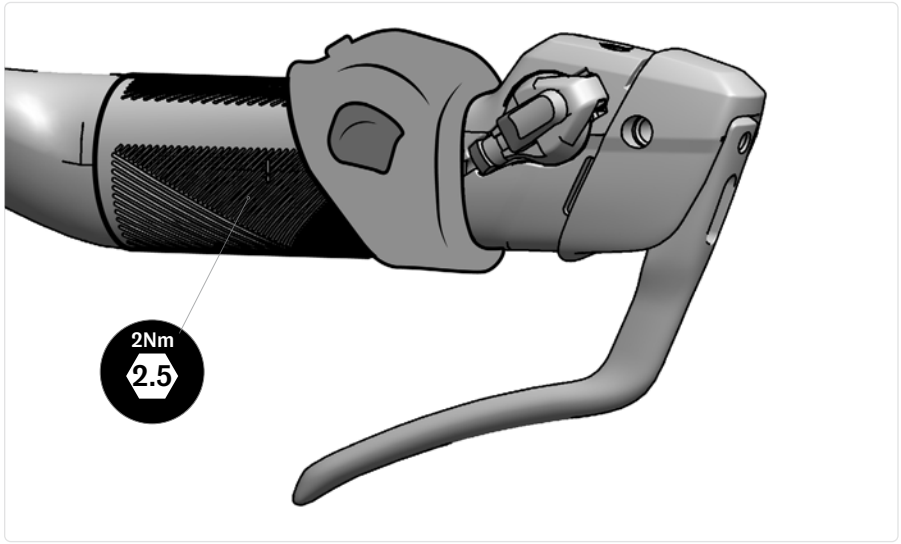

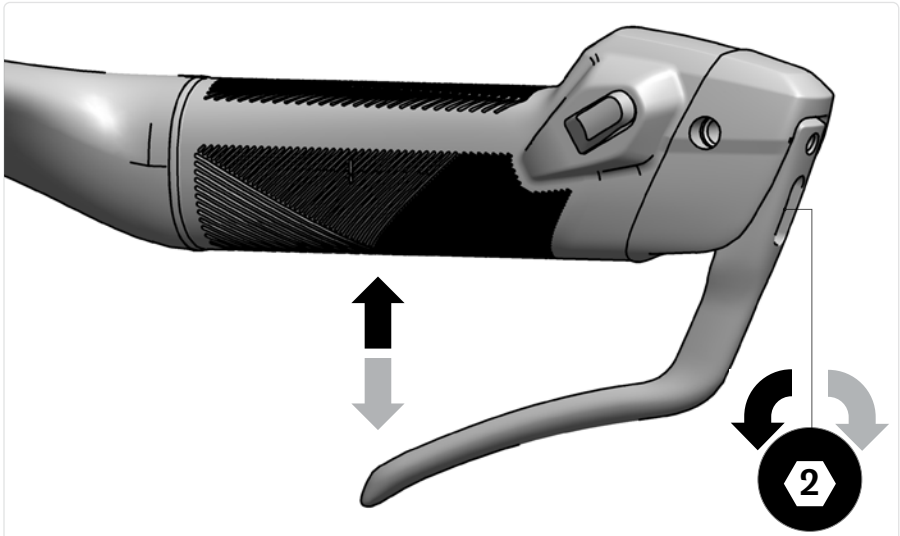

1. Connect the electronic shifter wire (**if Di2 build**).
2. Push the lever into position until it sits on the handlebar face.
3. Using a 2.5mm Allen key, screw the wedge bolt to 2 Nm. You can reach the bolt through the hole in the grip.
4. Flip back the grip, securing it in the groove in the brake lever.
5. The reach of the lever may be adjusted with a 2mm Allen key. Turning clockwise will increase the reach, while turning counter clockwise will reduce the reach.

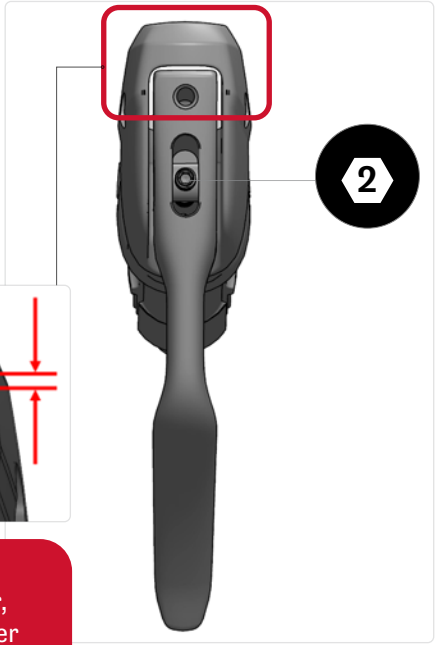

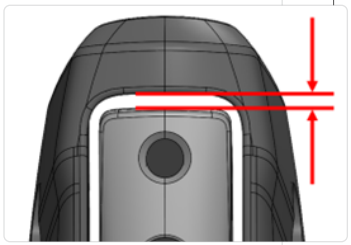

When adjusting the reach of the brake lever, leave a small gap between the lever and lever body. Faillure to do so will push the brake piston and cause pad rubbing on the disc.

14.1 COCKPIT ASSEMBLY

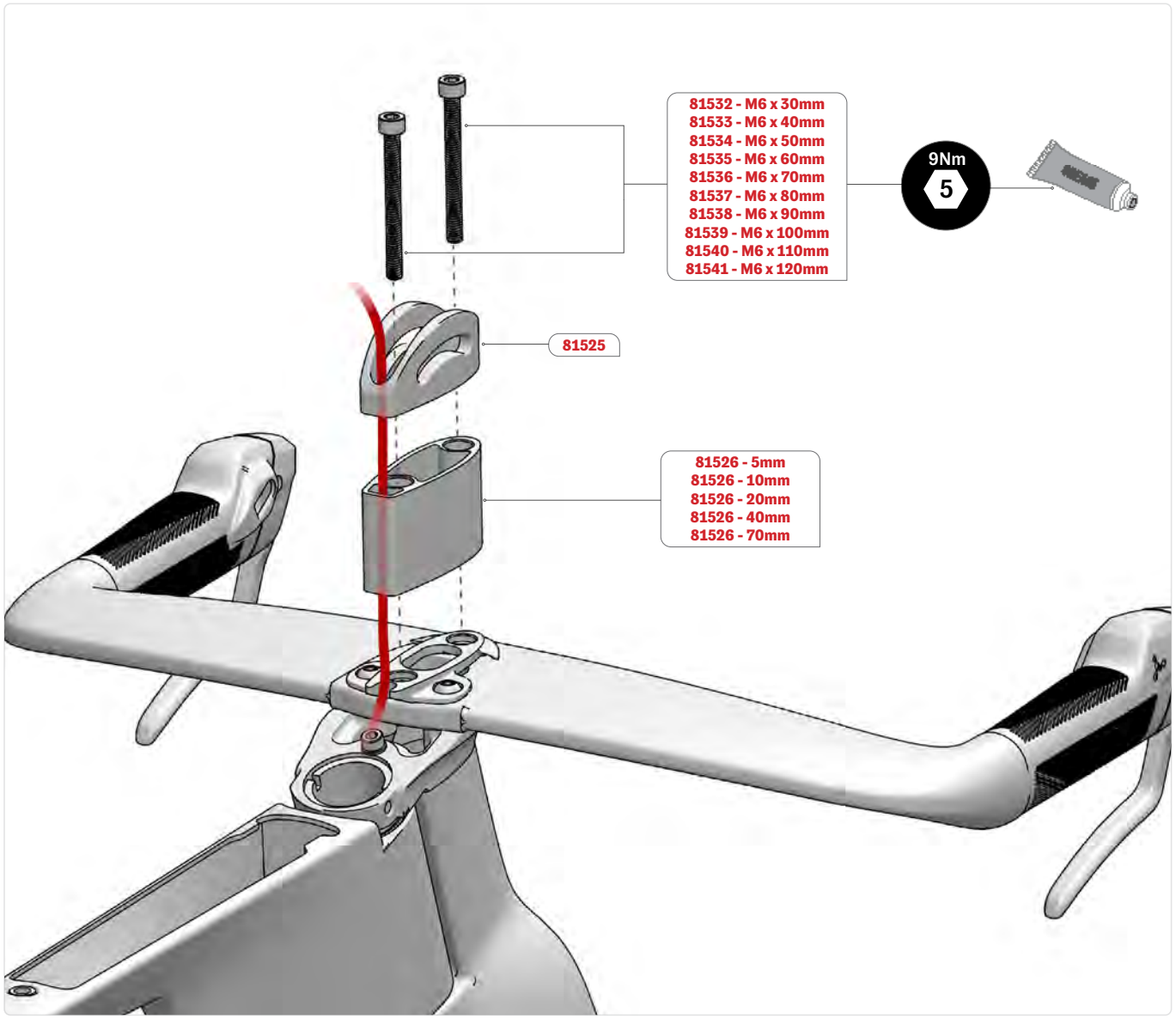

1. Choose the right combination of spacers and screws to achieve the desired fit. See next page for stack configuration options.
2. Stack the spacer(s) onto the first spacer. Each spacer will clip on to the lower one.
3. Set the swivel (SKU: 81525) on top of the spacer or spacers stack.
4. Apply grease to the threads of the two spacer screws (SKU: 81532 to 81541).
5. Install and tighten both M6 spacer screws to 6 Nm.
6. Note: For a Di2 assembly, run the Di2 extension cable from the junction box through the channel in the spacers and swivel.

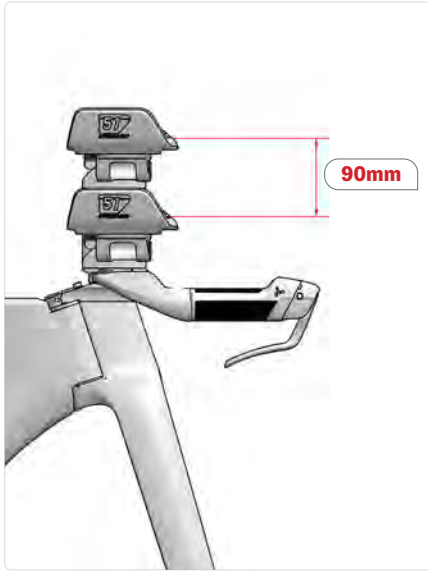

90 mm spacers max.

14.2 COCKPIT ASSEMBLY

USE THE SPECIFIED SPACERS AND SCREW LENGTH DEPENDING ON YOUR STACK HEIGHT.
(ALL DIMENSIONS ARE IN MM)

1. Check the screw length by using the 1:1 drawing below.
2. Align the the screw head and measure its length.
3. Do the same for the spacers.
4. Place the spacers in the order specified in the table, from bottom to top.

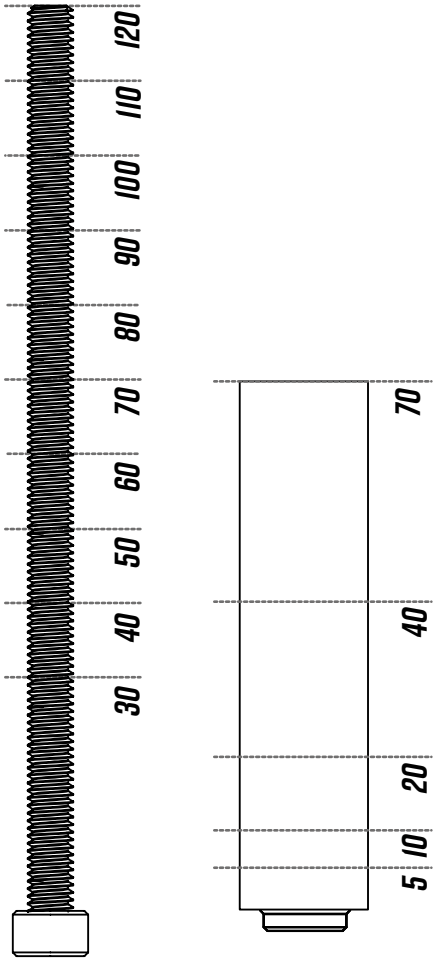

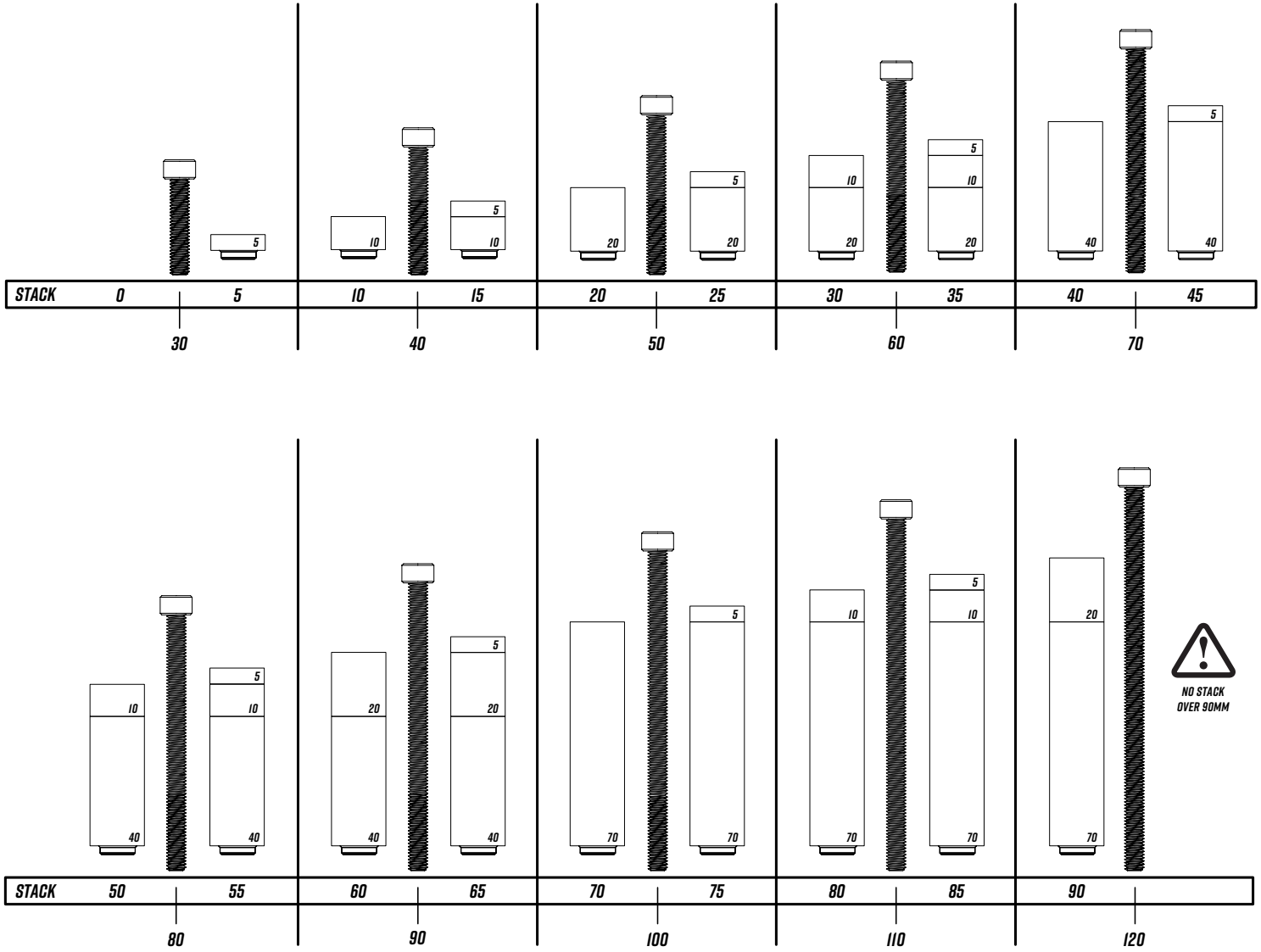

14.3 COCKPIT ASSEMBLY - BRIDGE INSTALLATION

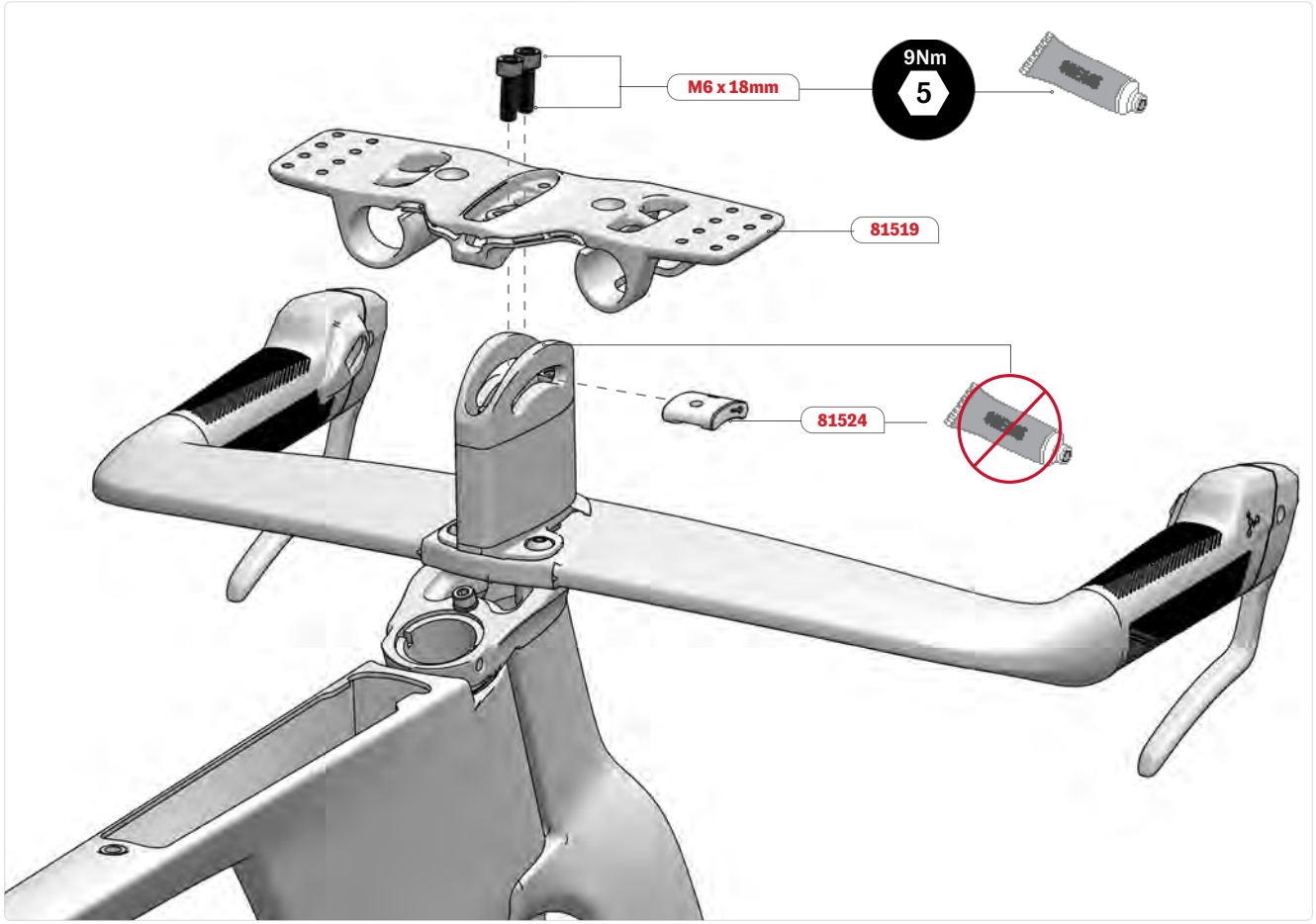



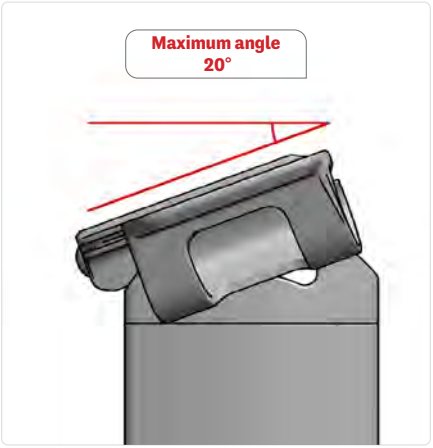

1. Slide the swivel bean (SKU: 81524) into the swivel spacer with the arrow pointing forward. Make sure all surfaces are free of grease.
2. For Di2 assembly, run the Di2 extension cable through the lower hole on the bridge (SKU: 81519) and out the rear hole.
3. Apply grease to the threads of the two M6 x 30 mm screws.
4. Position the bridge on top of the swivel spacer, making sure all the pivoting surfaces are free of grease.
5. Hand-tighten both M6 x 30 mm screws into the swivel bean.
6. Adjust to desired angle. The bridge angle can be fixed anywhere between 0° to 20°. Follow the laser etching on the swivel spacer NDS.
7. Tighten both M6 x 30 mm screws to 9 Nm.

14.4.1 COCKPIT ASSEMBLY - EXTENSION ASSEMBLY

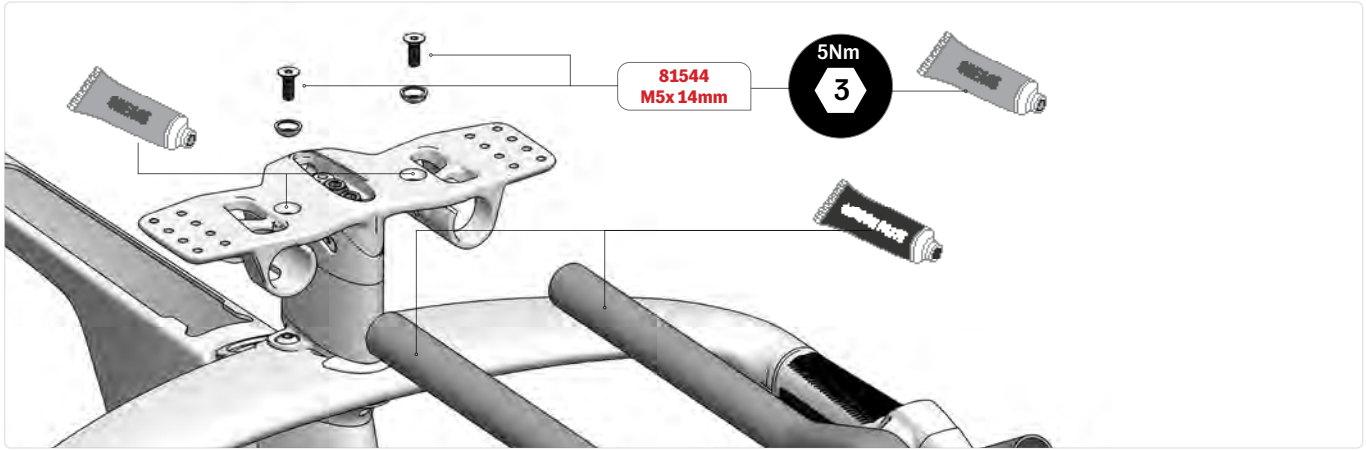



1. Slide both extensions into the bridge.
2. Once the desired length is achieved, follow the next steps depending on the groupset used.
3. Apply grease to the threads of the two M5 x 14 mm screws and both sides of the spherical washers.
4. Apply carbon paste on the extension bars and bridge interface.
5. Tighten both M5 x 14 mm screws to 5 Nm.

Electronic:

1. Using a utility pick, mark the junction between the extension and the rear face of the bridge.
2. Cut the extension **4 mm shorter** than the mark made in the previous step. (To allow space for the extension plugs) (See p.58)
3. Make sure you're in the cutting and clamping section shown on the extension.

Mechanical:

1. Using a utility pick, mark the junction between the extension and the bridge on the outside of the bridge.
2. Cut the extension **on the mark** made in the previous step.
3. Make sure you're in the cutting and clamping section shown on the extension.

14.4.2 COCKPIT ASSEMBLY - EXTENSION ASSEMBLY



14.5.1 COCKPIT ASSEMBLY - ROUTING - DI2

For eTap see page 56

For mechanical see page 57

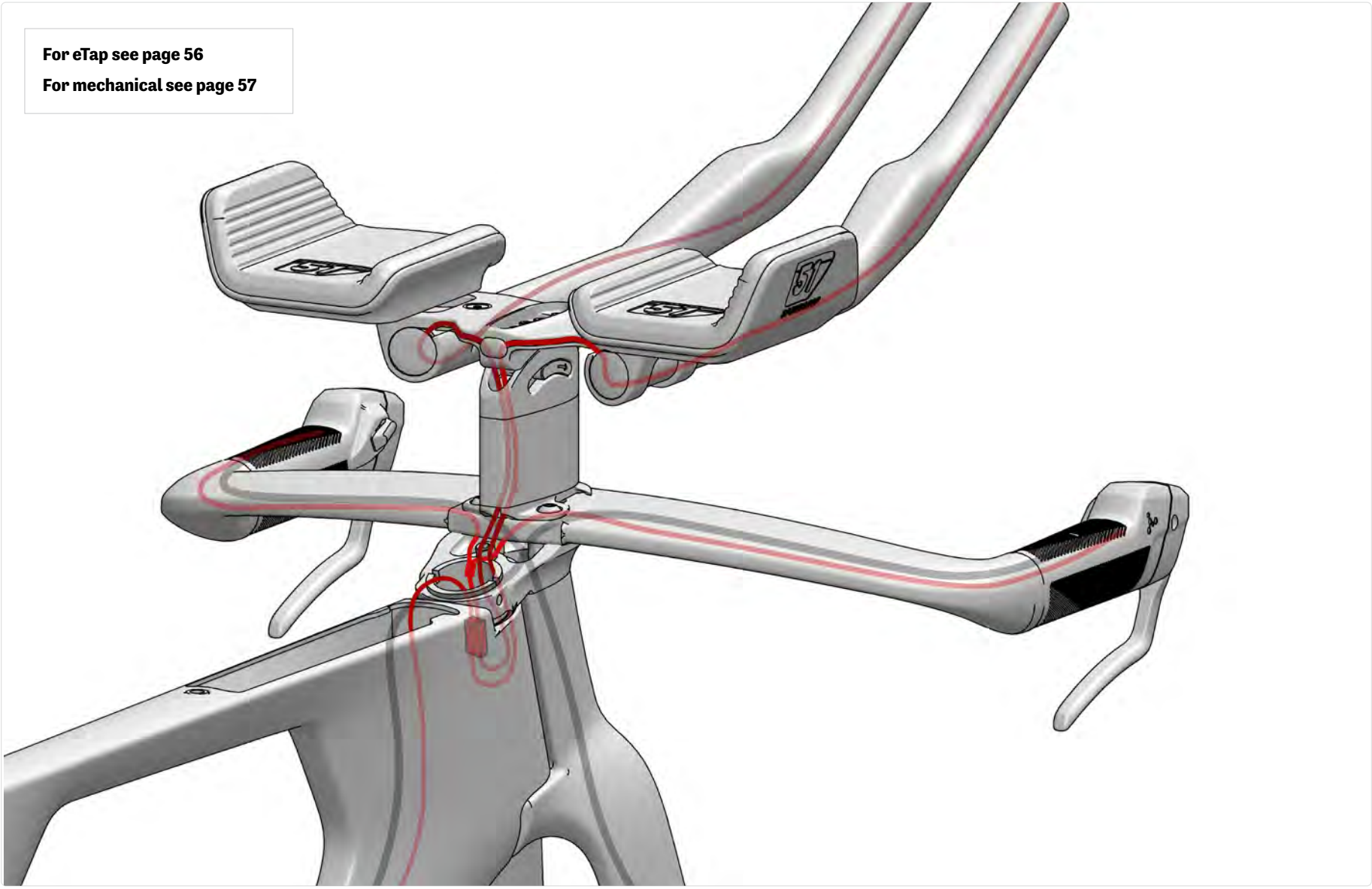

14.5.2 COCKPIT ASSEMBLY - ROUTING - ETAP

For Di2 see page 55

For mechanical see page 57

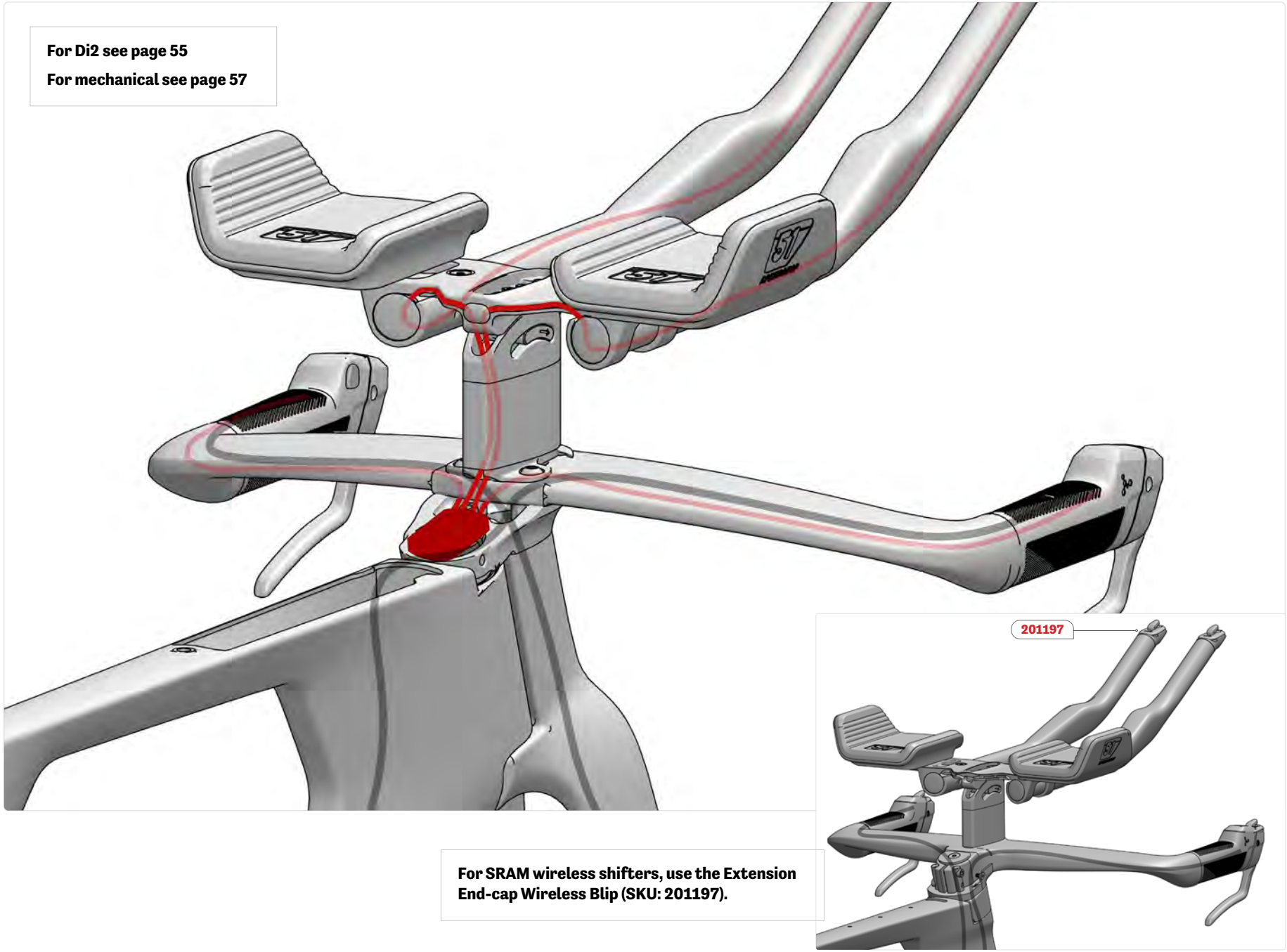

For SRAM wireless shifters, use the Extension End-cap Wireless Blip (SKU: 201197).

19. EXTENSION END-CAP ASSEMBLY - ETAP

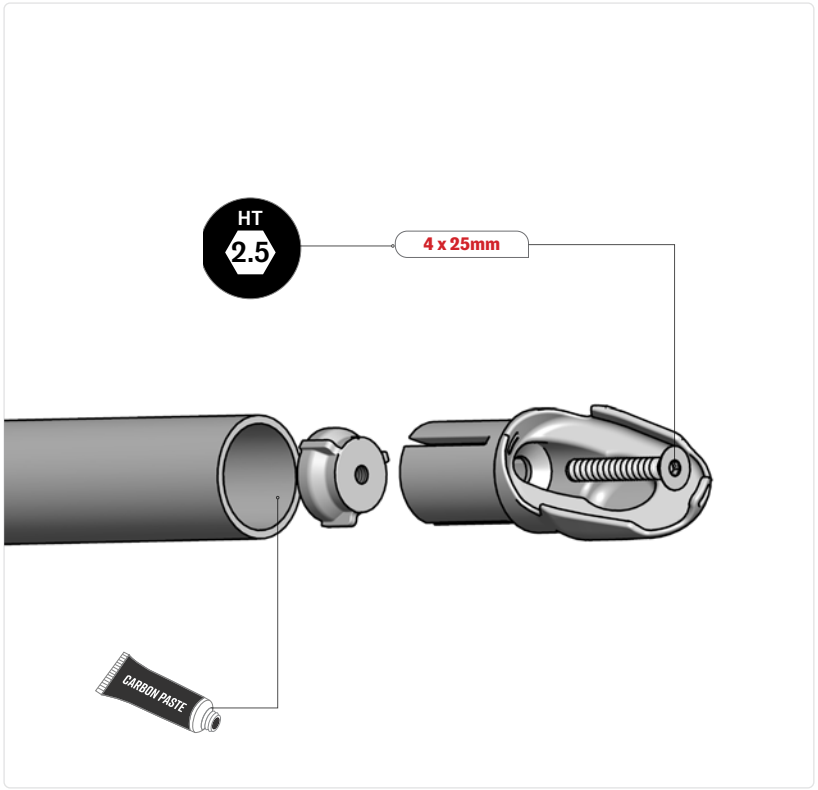

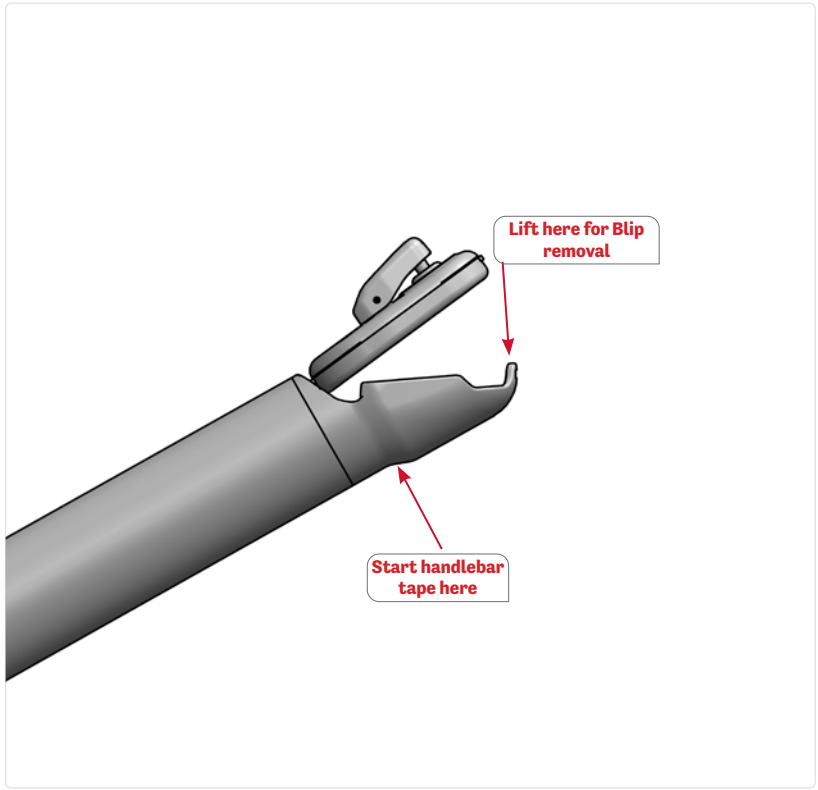

1. Apply carbon paste inside the extension.
2. Apply grease to the threads of the M4 x 25 mm screw.
3. Install the SRAM eTap AXS Wireless Blips shifter Extension end-cap assembly in the extension. Position in the desired angle.
4. Hand-tighten the M4 x 25 mm screw until the Extension end-cap don't move.
5. Install the SRAM eTap AXS Wireless Blips shifter in the adaptor. Insert the wider part first and push the front end until the SRAM eTap AXS Wireless Blips clip in place.
6. Repeat for the other side.

Important:

- The SRAM eTap AXS Wireless Blips clip in the extension end-cap assembly, DO NOT use the adhesive supplied with the shifter.
- To remove the SRAM eTap AXS Wireless Blips use a small flat screwdriver to pry the front of the extension end-cap.
- The handlebar tape can start on the taper of the Extension end-cap assembly.

14.5.3 COCKPIT ASSEMBLY - ROUTING - MECHANICAL

For Di2 see page 55

For eTap see page 56

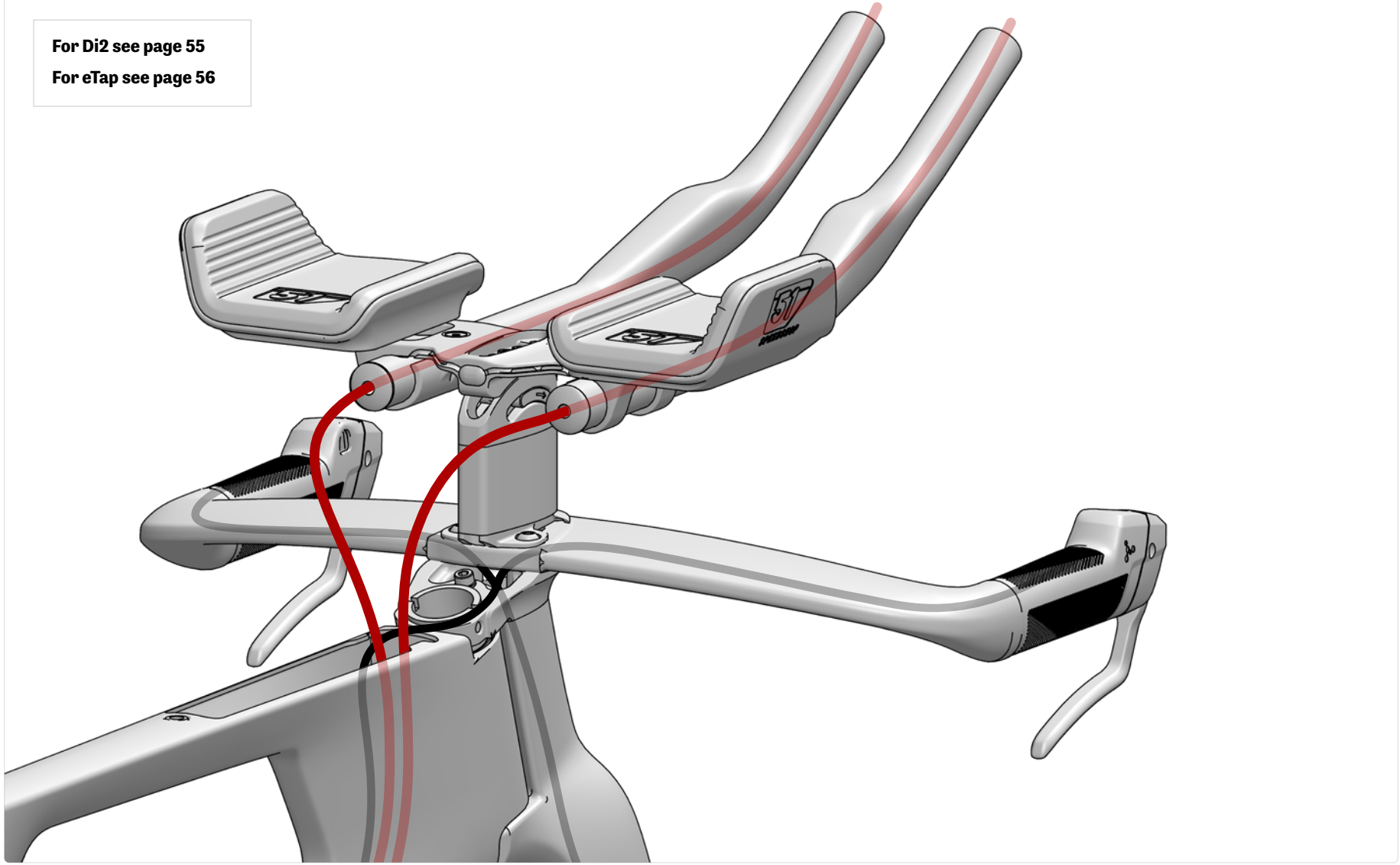

14.5.4 COCKPIT ASSEMBLY - ROUTING - ELECTRONIC CABLES

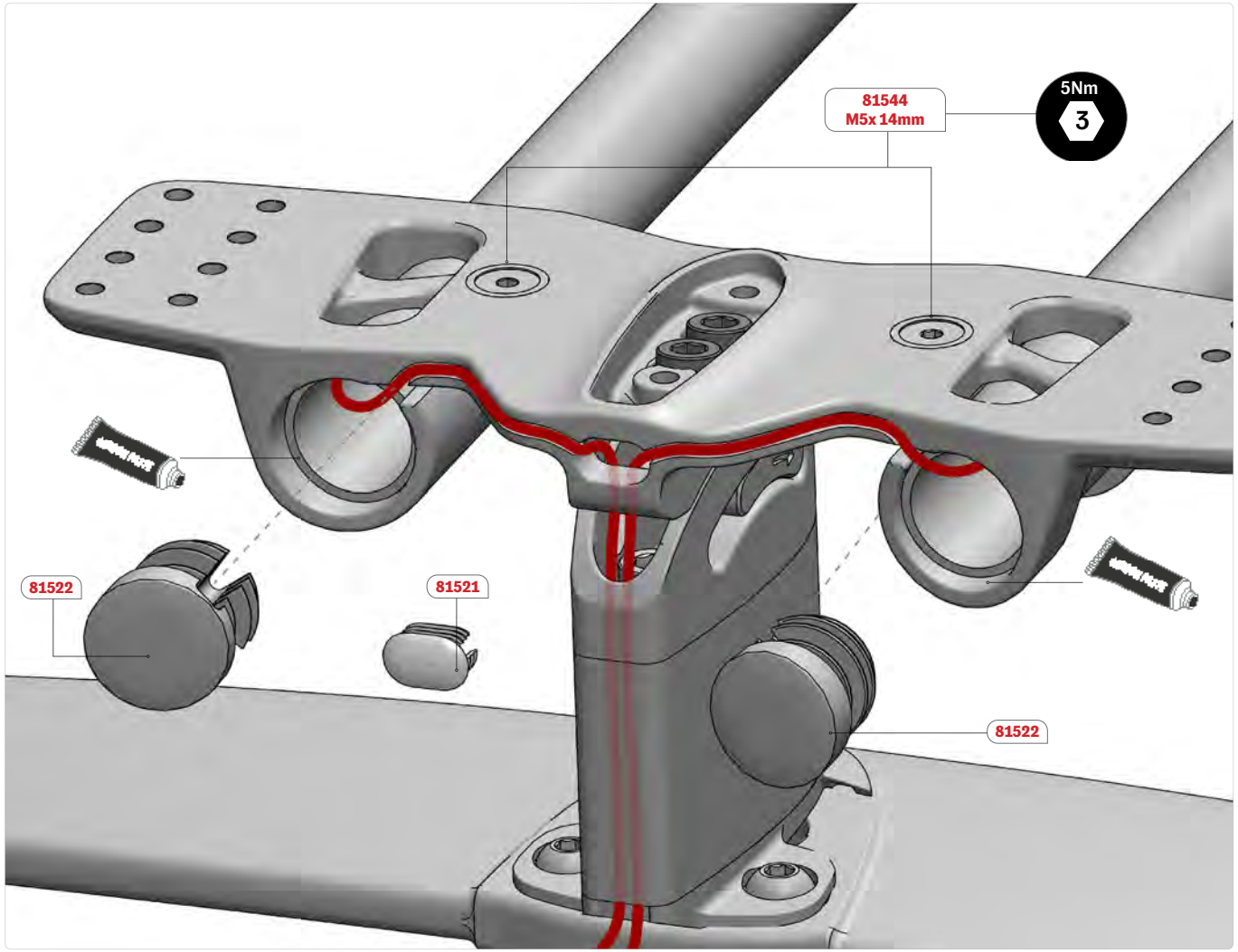

1. Apply carbon paste on the bridge at the extension contact area.
2. Position the extensions into the bridge.

   Route the cables:

   Di2

   Run the Di2 cables through the extensions.

   Etap

   Install the shifter onto the extension.

   Run the cables into the bridge hole and down the spacer.
3. Connect the cables to the blipbox.
4. Clip the cables in the grooves and push the excess into the extensions.
5. Rotate the extensions to the desired angle.
6. Install the extension caps (SKU: 81522). Choose the correct groove to match the bridge angle.
7. Tighten the extension fixing screws to 5 Nm.
8. Install the bridge plug (SKU: 81521).

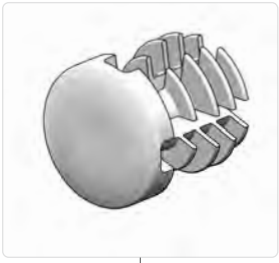

14.5.5 COCKPIT ASSEMBLY - ROUTING - MECHANICAL CABLES

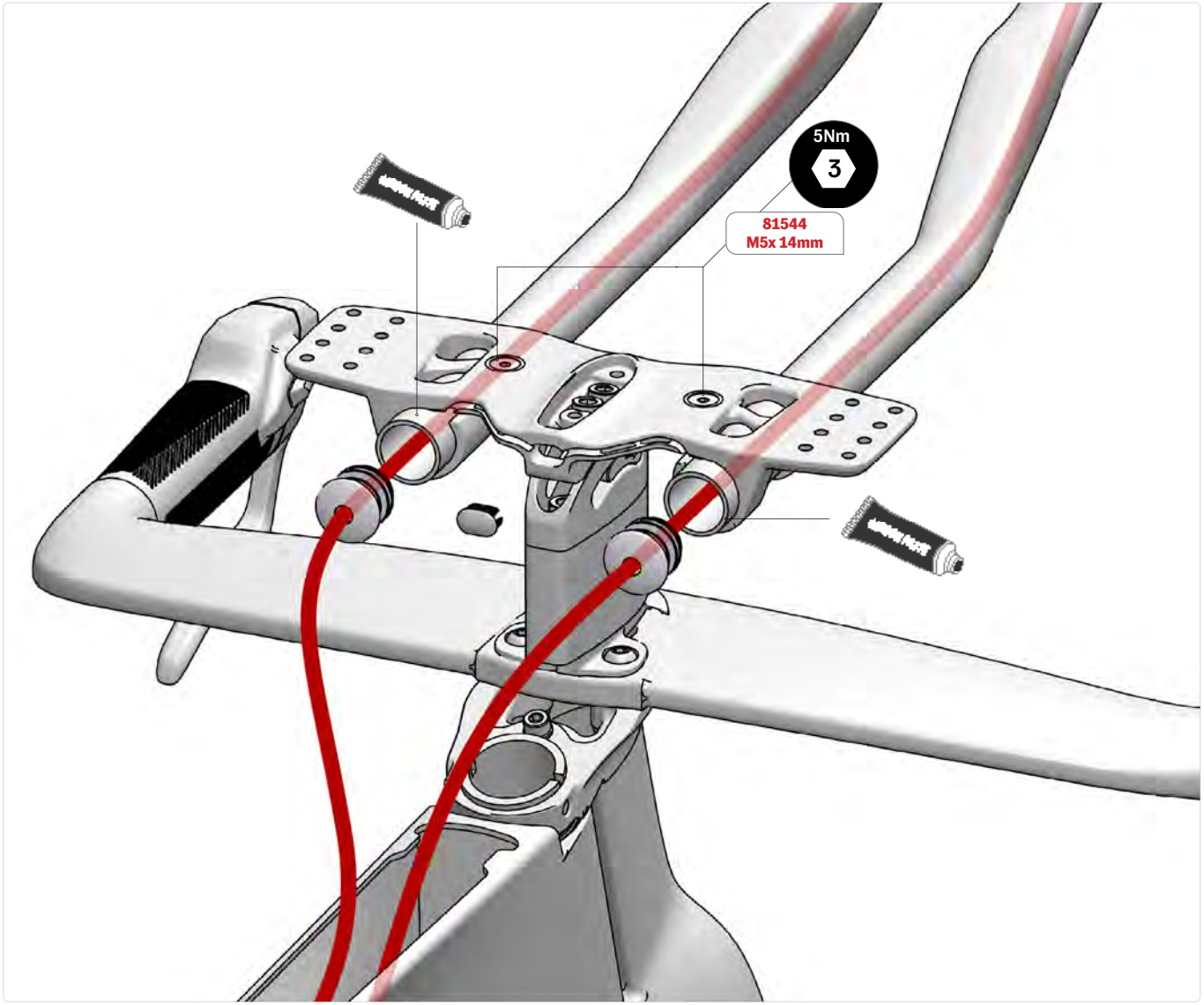



1. Apply carbon paste on the bridge at the extension contact area.
2. Position the extensions into the bridge.
3. Route the cables.
4. Set the shifters on the extensions.
5. Rotate the extensions to the desired angle.
6. Install the extension caps (SKU: 38977, same cap for both sides).
7. Tighten the extension fixing screws to 5 Nm.
8. Insert the bridge plug (SKU: 81521).

14.6 COCKPIT ASSEMBLY - ARMREST ASSEMBLY

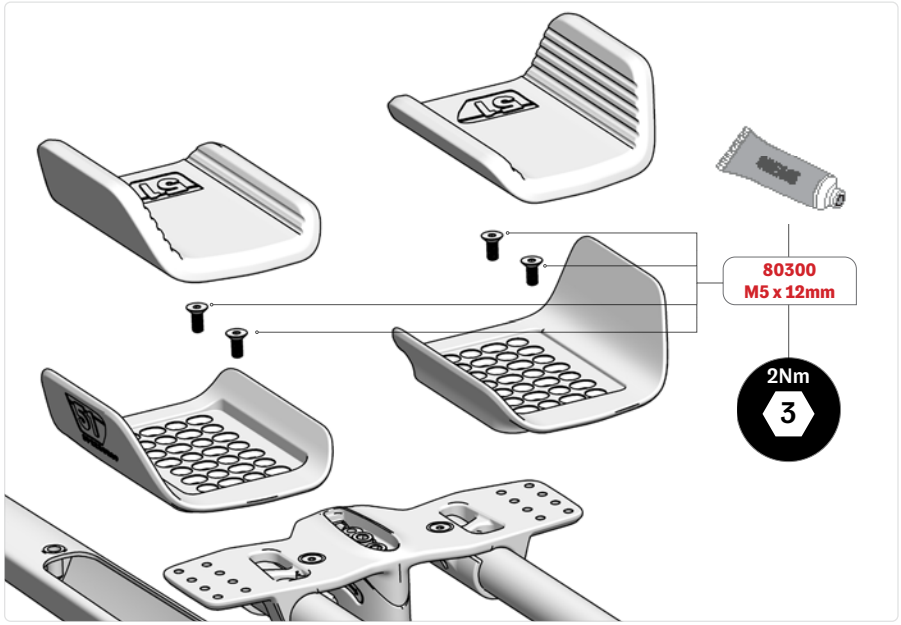

1. Fix the adhesive Velcro to the armrests.
2. Apply grease on the threads of all M5 x 12mm screws.
3. Screw the armrests onto the bridge at 2 Nm in the desired position.
4. Finish the assembly by installing the armrest pads onto the Velcro.

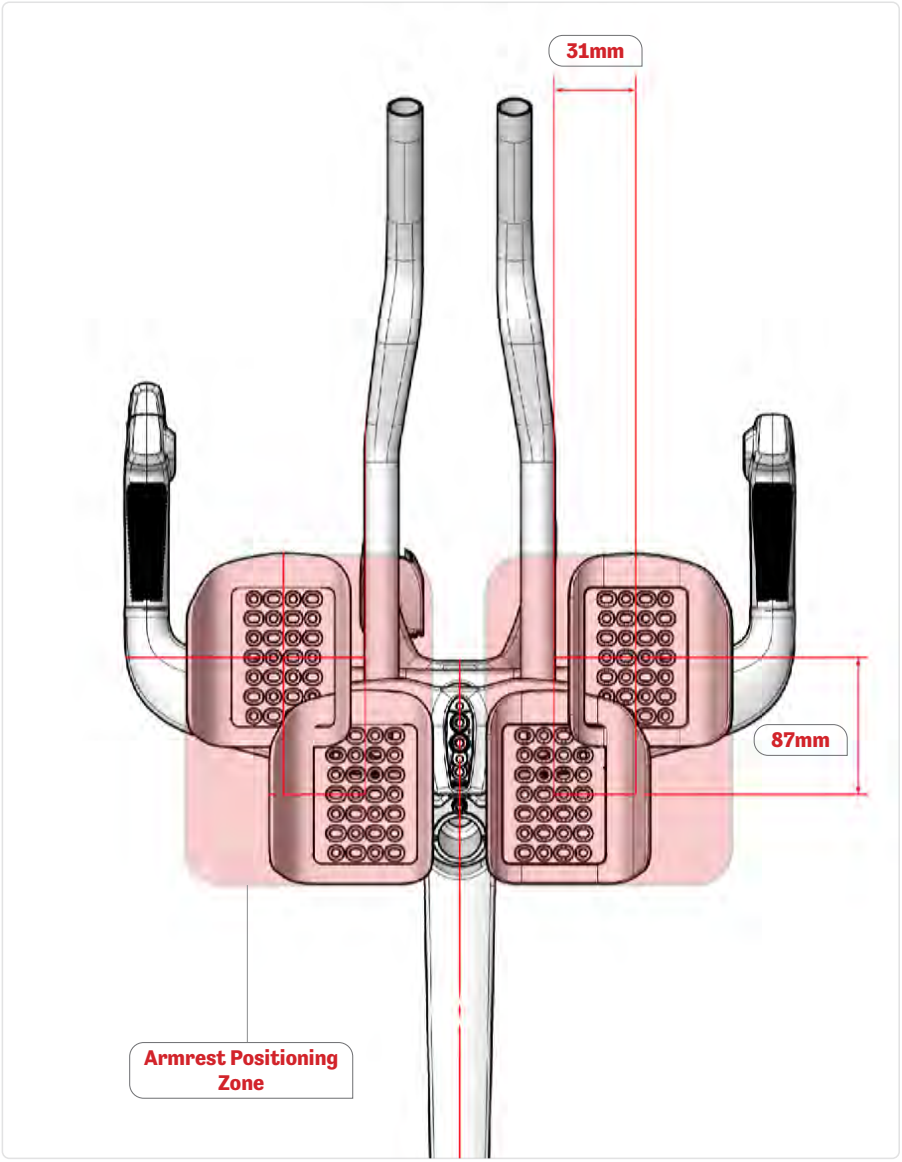

14.7 COCKPIT ASSEMBLY - STEM CAP INSTALLATION

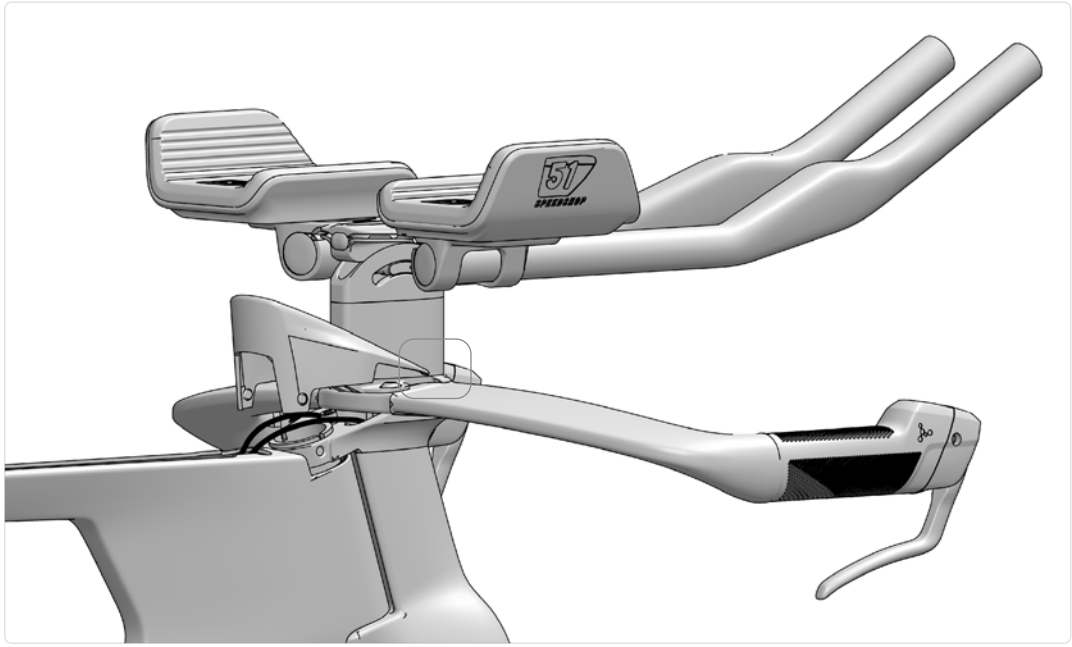

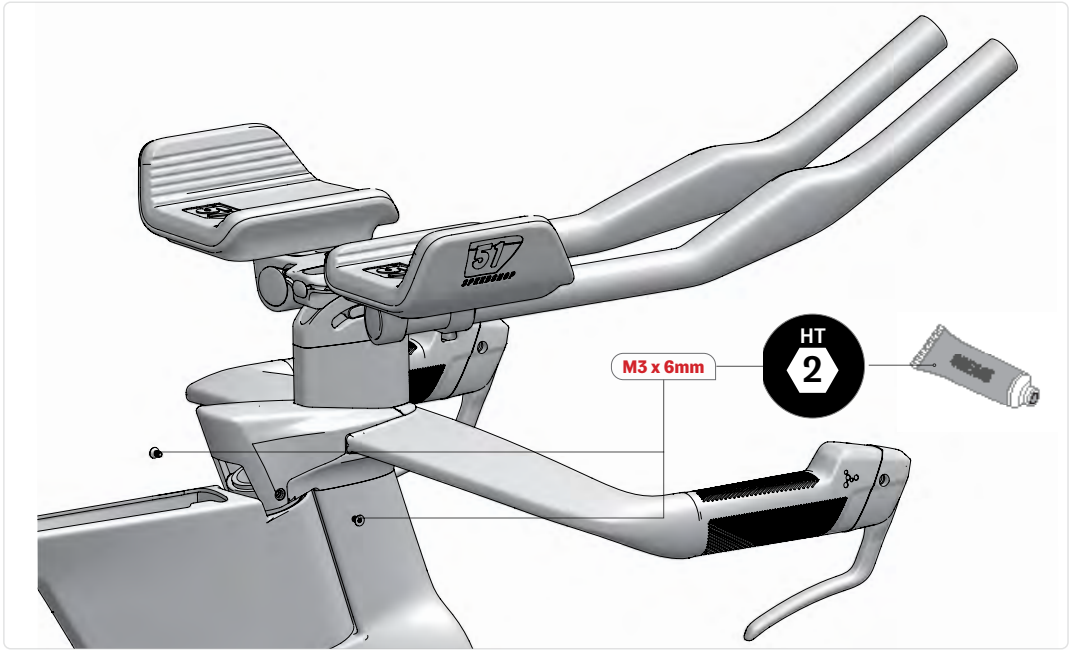

eTap Only



For eTap : Push the blipbox into the stem cap by the notch until it clicks.

1. Insert the front lips into the first spacer grooves.
2. Push the rest of the stem cap until holes are aligned.
3. Grease the threads of both M3x6mm flat head screws.
4. Hand-tighten both M3x6mm flat head screws.

Non Threaded fork

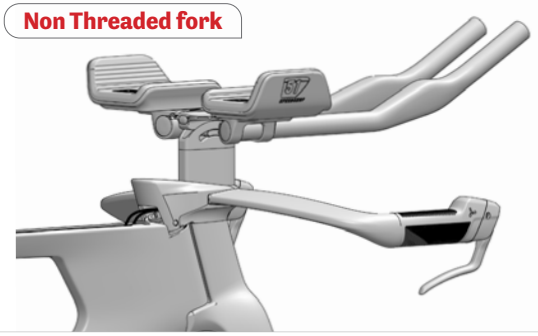

1. Insert the front lips of the stem cap into the first spacer grooves.
2. Press down on the stem cap until the rubber plugs clip into the fork stem recesses.

15 STACK & ANGULATION ADJUSTEMENT

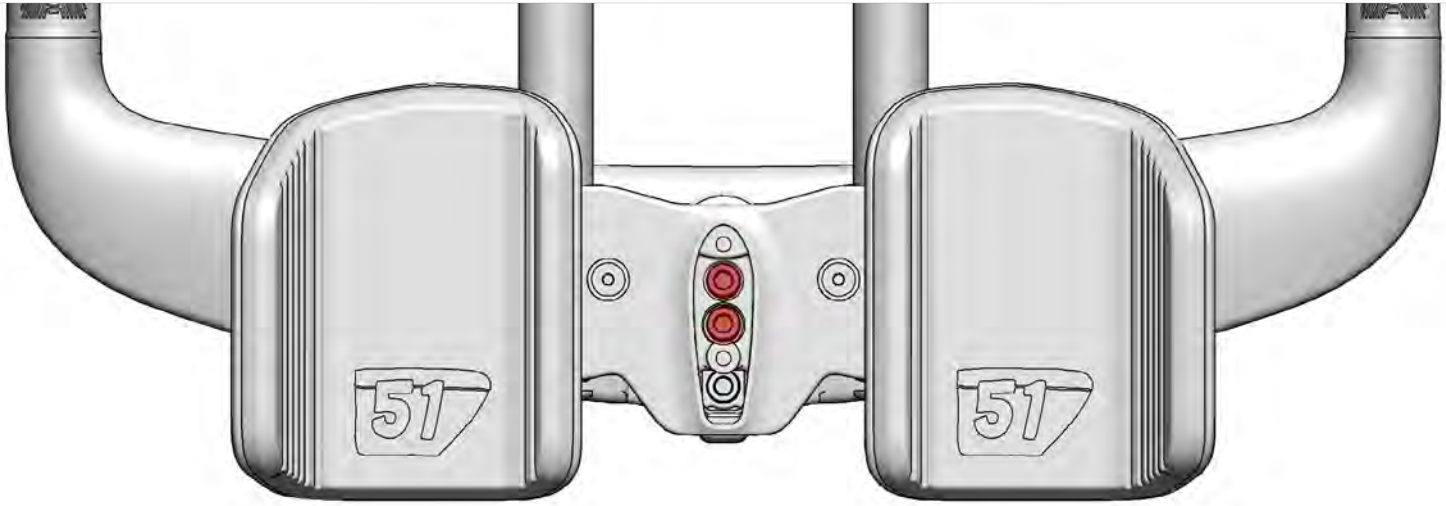

1. Loosen both M6 x 18mm screws (Red) from the bridge so that you can adjust the angle.
2. Moving the bridge angle creates space to remove both spacer screws.
3. Adjust the stack as desired (max. 90mm stack). Refer to the spacer and screw lengths chart. (p.51)

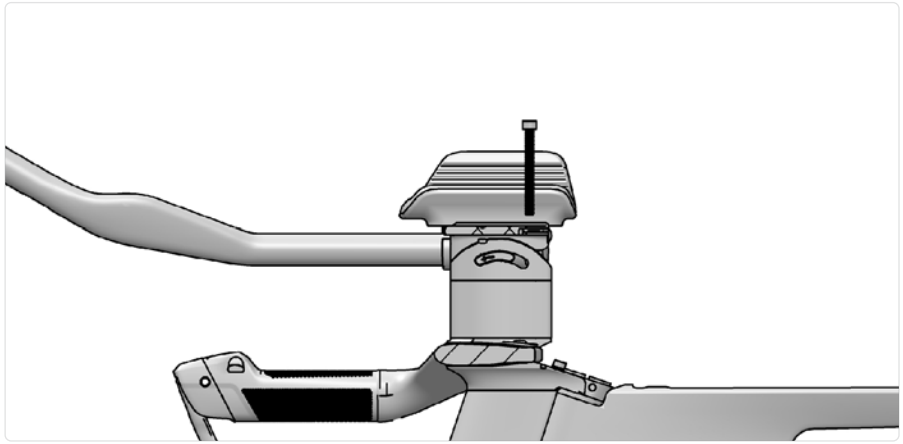

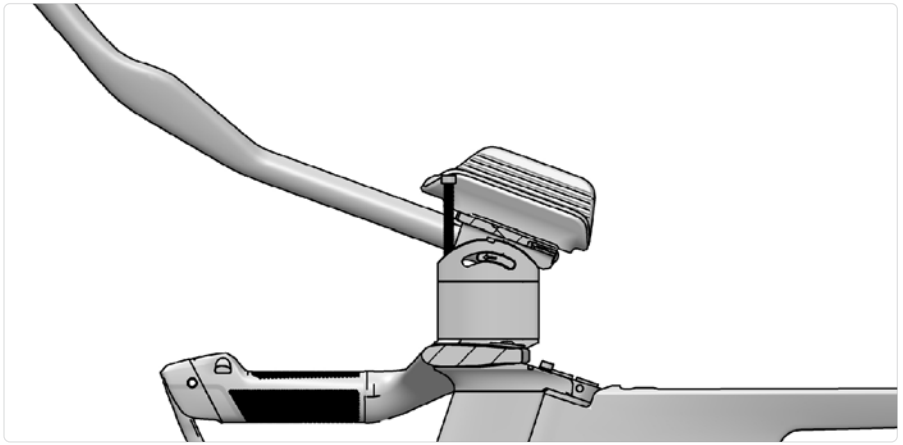

16. BENTO BOX INSTALLATION

1. Install the bento box clamp onto the bento box with the two M4 x 16 mm screws. **Dont tighten yet.**
2. Slide the bento box onto the frame hole on the top tube. Make sure the frame is between the bento box and the clamp.
3. Hand-tighten the three M4 x 16 mm screws.

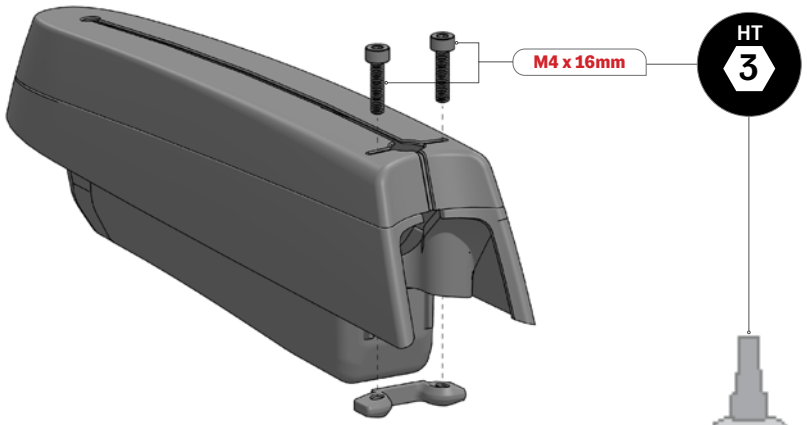

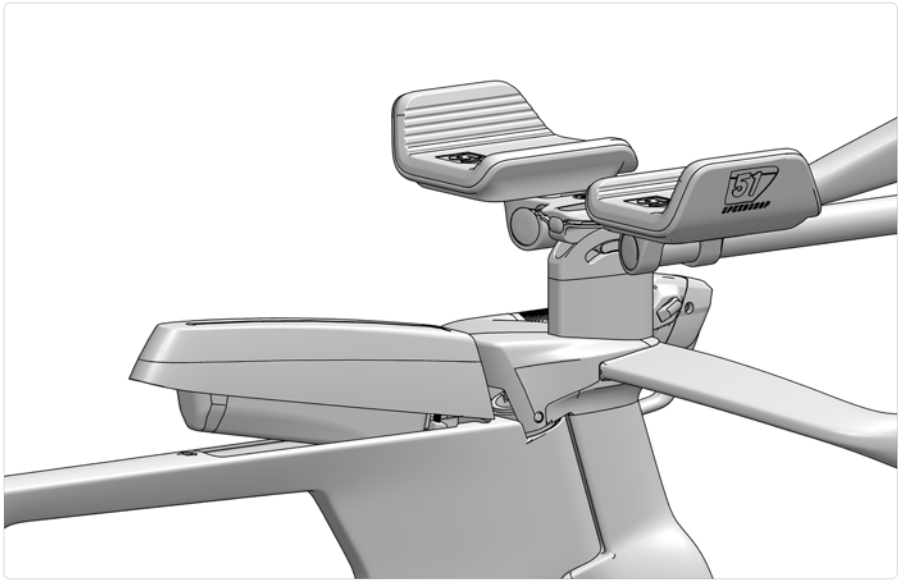

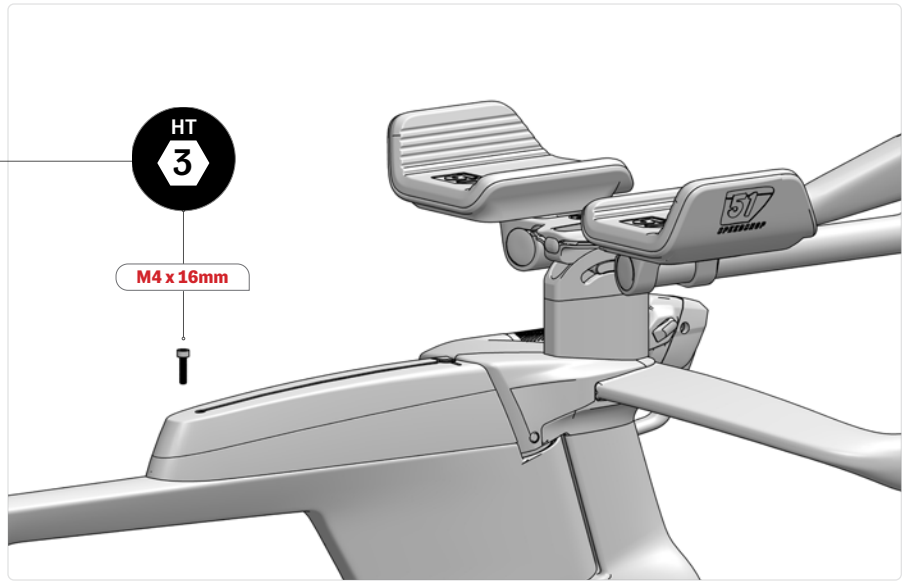

17 BOTTLE CAGE MOUNT ASSEMBLY

Regular position



Forward position

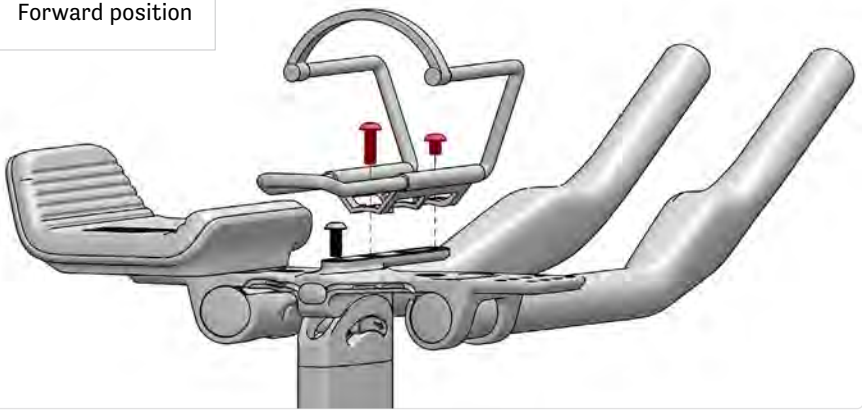

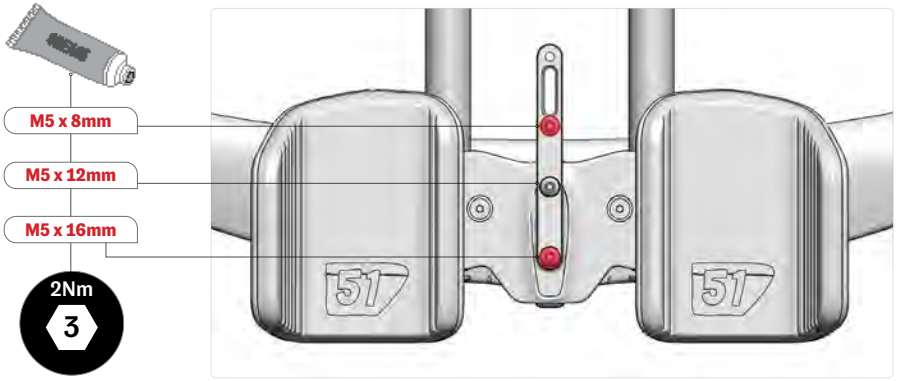

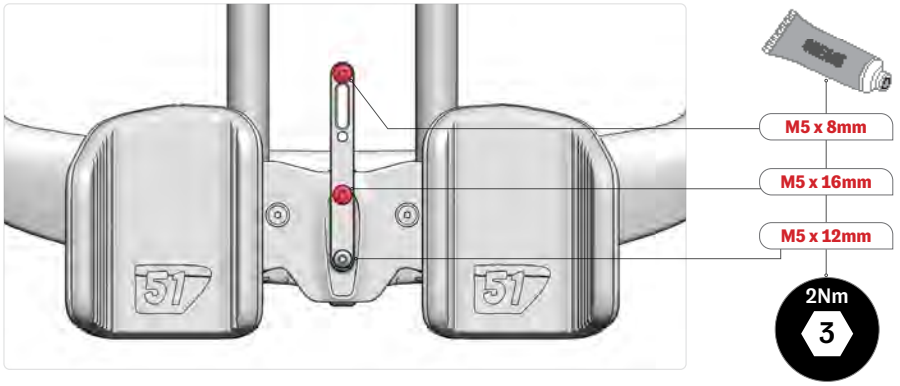

Without waterbottle mount

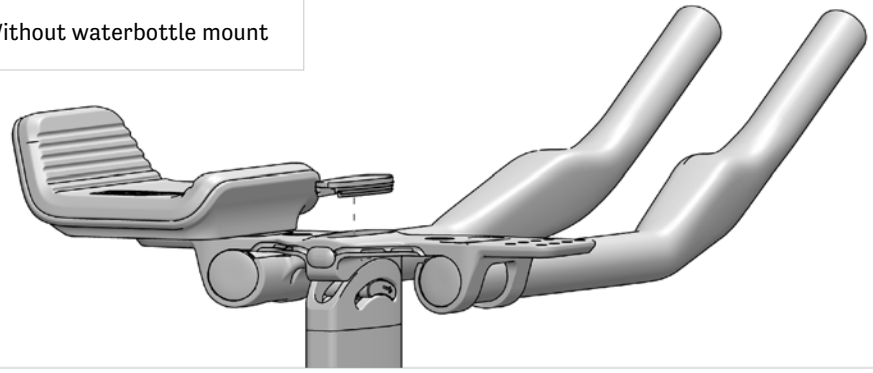

1. Screw the water bottle cage onto the mount at the desired position using the red screws.
2. Insert the bridge plug if the mount is not wanted.



18.1 TOOLBOX COMPONENTS



Inflator Head

Silicone Sleeve

Multi-Tool



C02 Cartridge 16 g
Not Included



Inner Tube
Not Included



Tire Lever



Tool Pouch





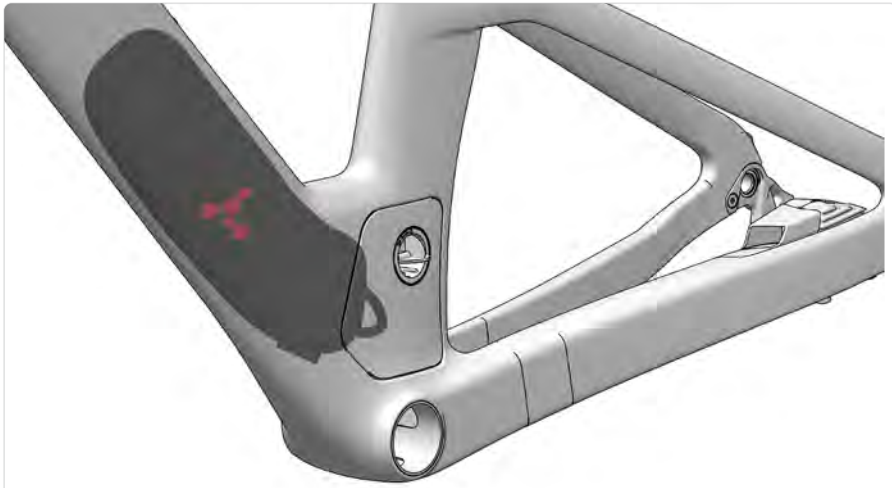

18.2 TOOLBOX DOOR INSTALLATION

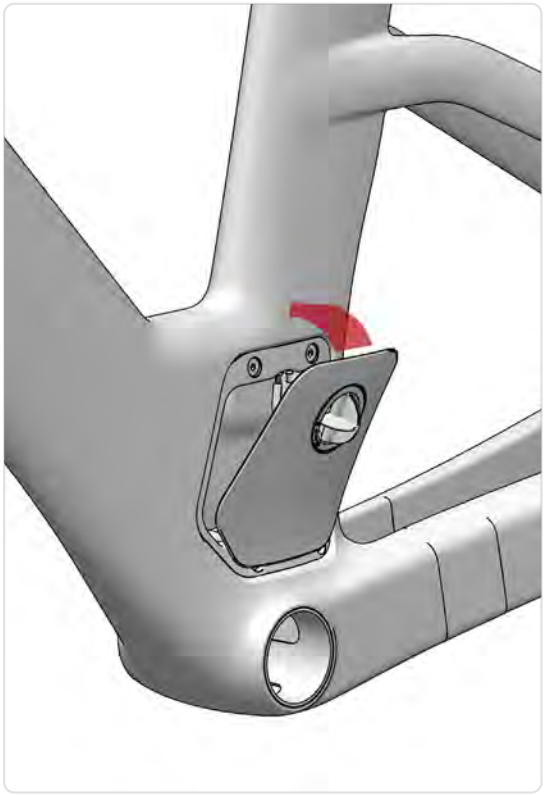

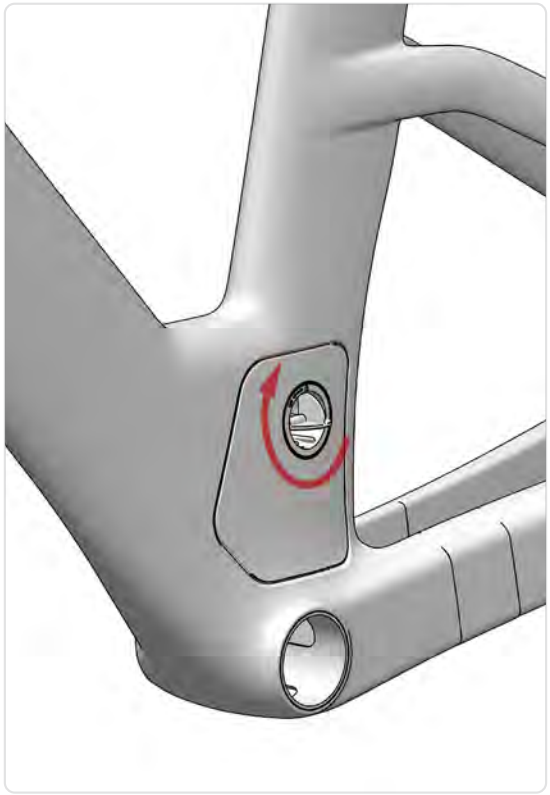

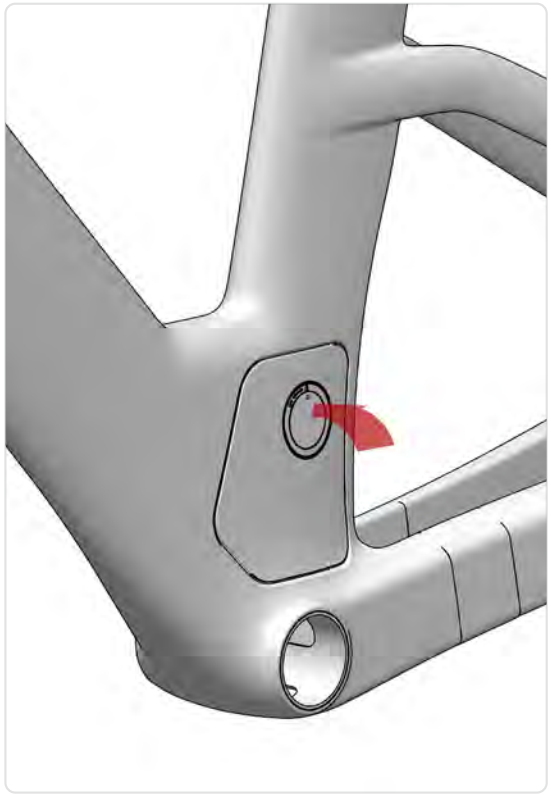

1. Insert the door at the bottom and make sure the alignment lips are inserted into the door receptacle.
2. Push the door up against the door receptacle.
3. Turn the door knob 90 degrees clockwise to lock the door in place.
4. Push the door knob flap into its closed position.

19.1 WHEEL/DISC INSTALLATION

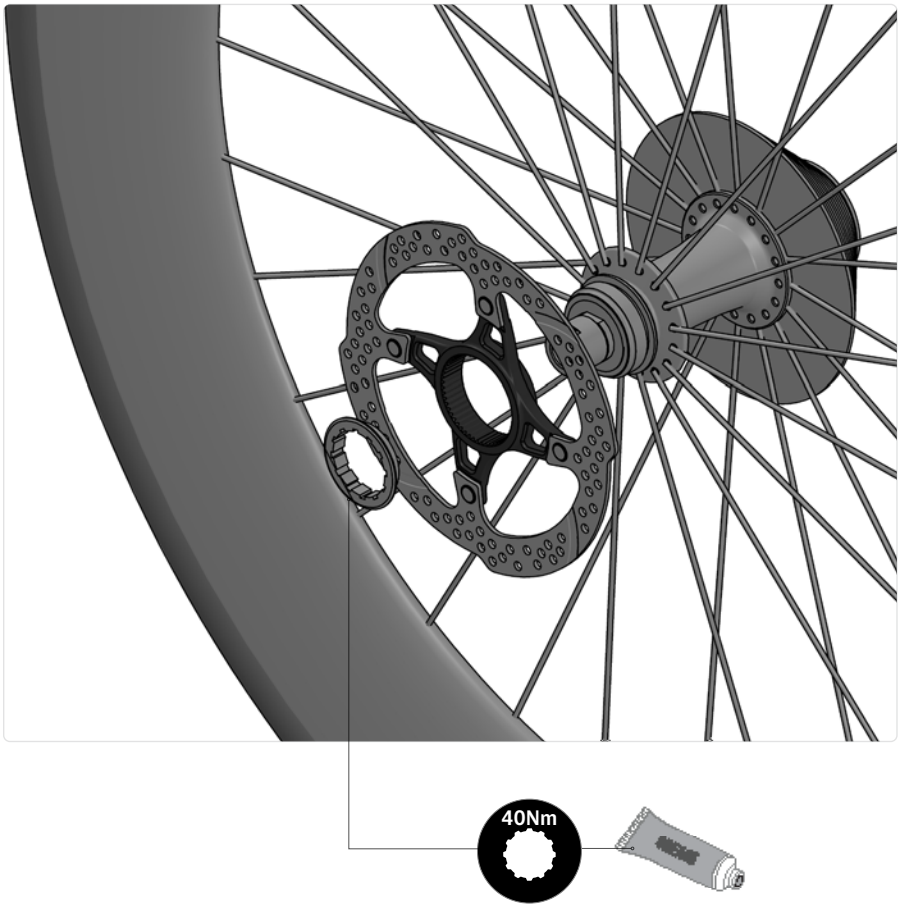

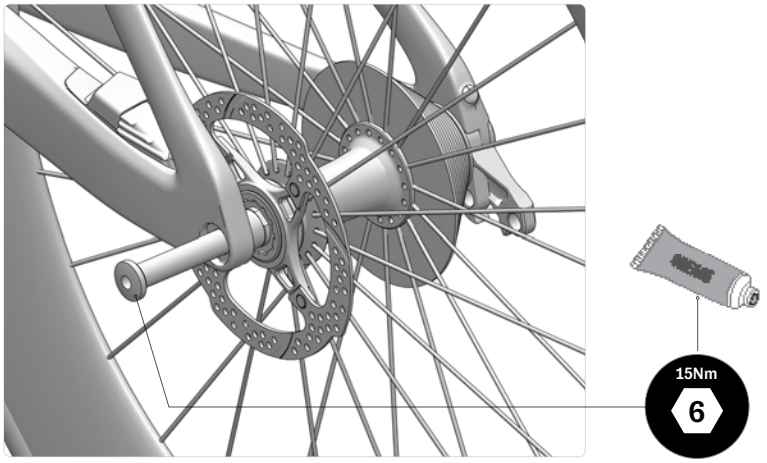

1. Insert the rear rotor (140 mm) into the hub centerlock.
2. Apply grease to the lockring threads.
3. Using a torque wrench, tighten the lockring onto the wheel centerlock to 40 Nm.
4. Apply grease to the axle threads.
5. Thread the thru-axle through the wheel and tighten it to 15 Nm.
6. Repeat for front wheel.

19.2 WHEEL/DISC INSTALLATION

1. Guide the caliper onto the rotor.
2. Tighten both M5 x 20 mm screws to 7 Nm.
3. Make sure the rotor doesn't rub on the brakes pads.
4. Repeat for front caliper, using M5 x 27 mm.

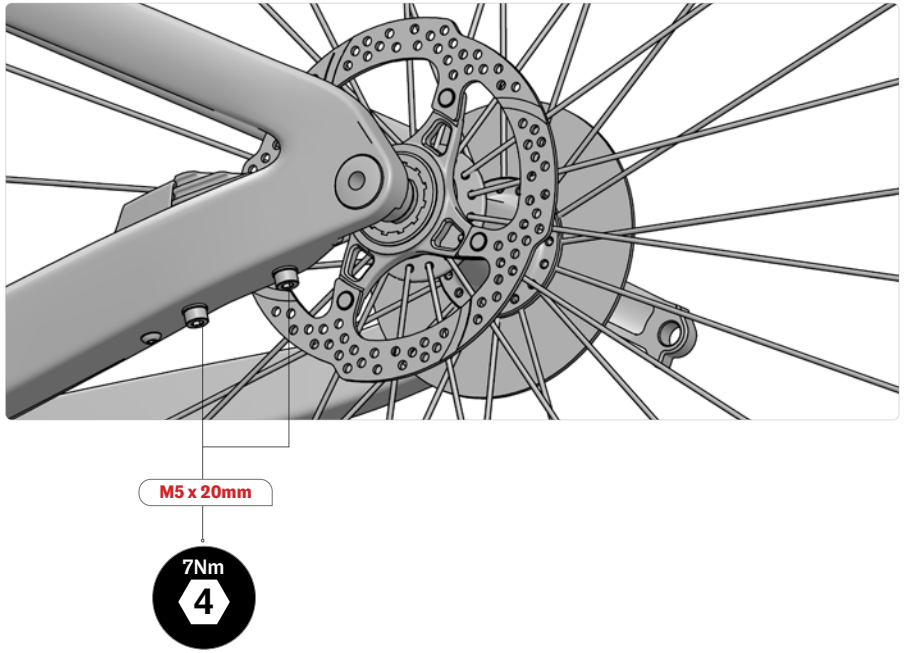

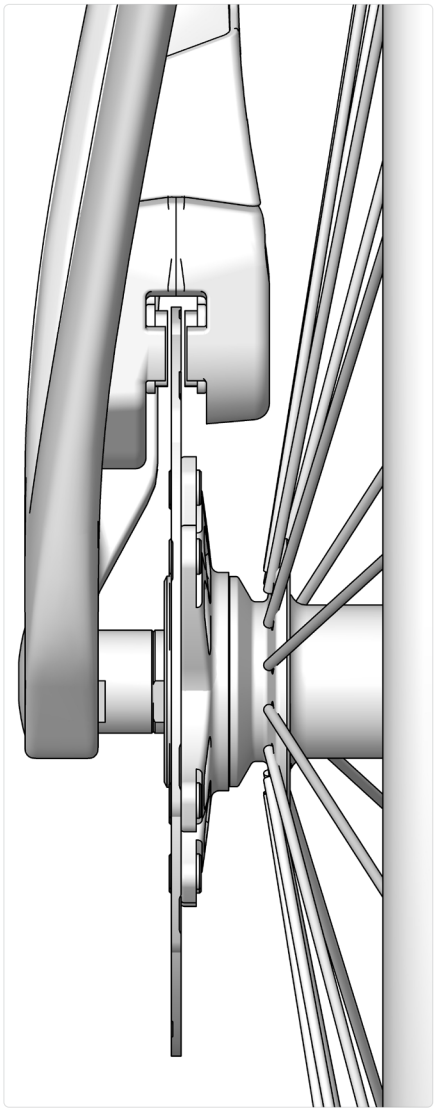

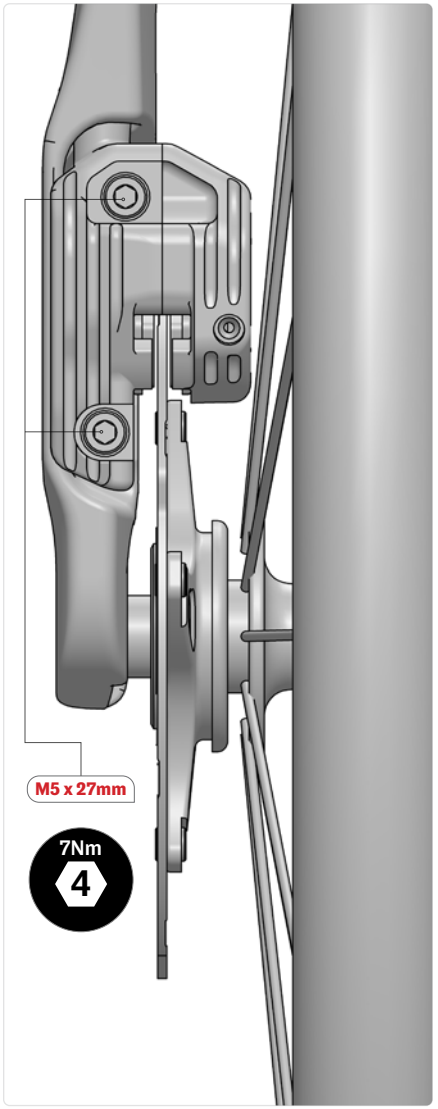

20. COMPUTER MOUNT ASSEMBLY

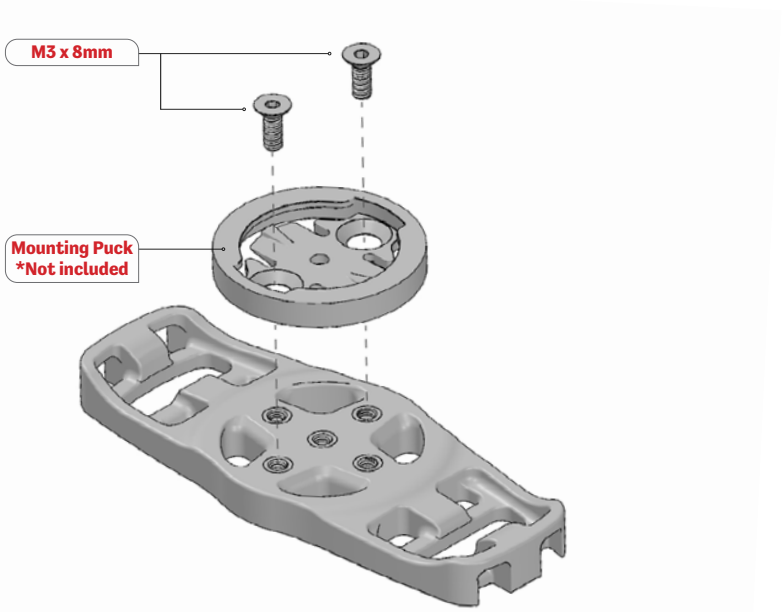



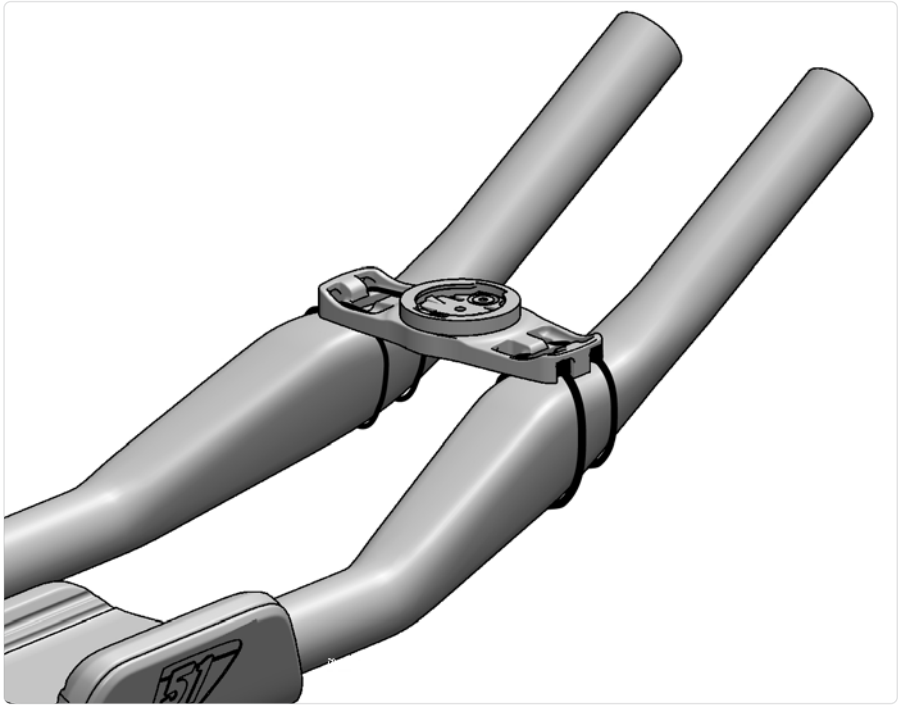

1. Choose the right mounting puck for your computer.
   Not supplied with frameset
2. Screw the mounting puck onto the computer mount.
3. Use cable ties to attach it to the extensions.
4. Cut the excess cable tie and remove any sharp edges with a cutter.

21. THREADED INSERT CHANGE

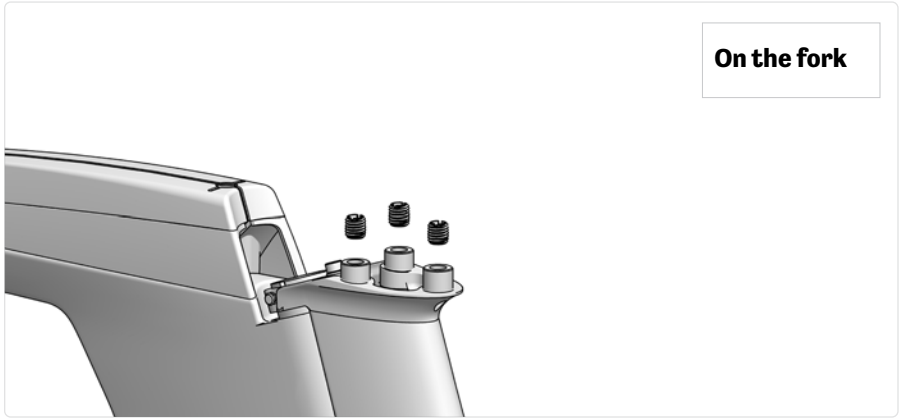

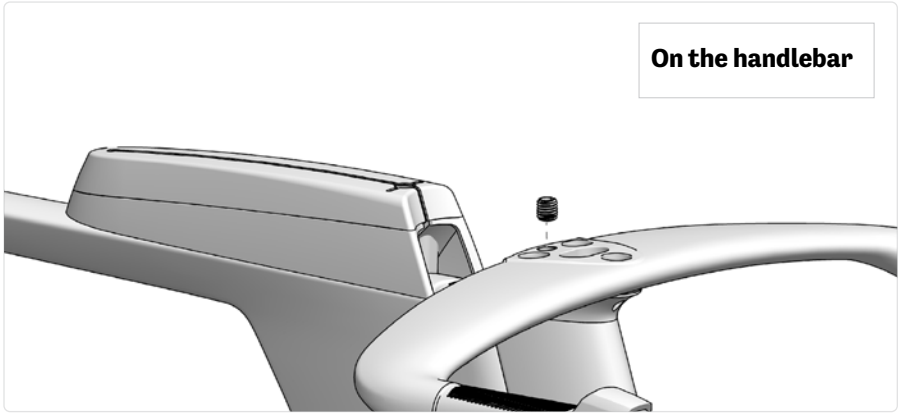

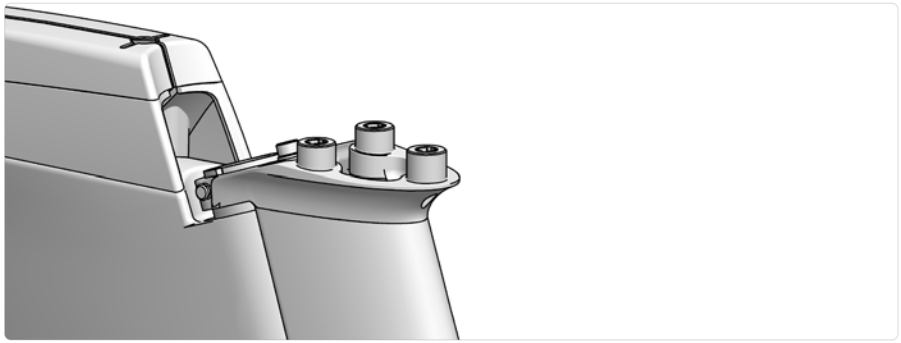

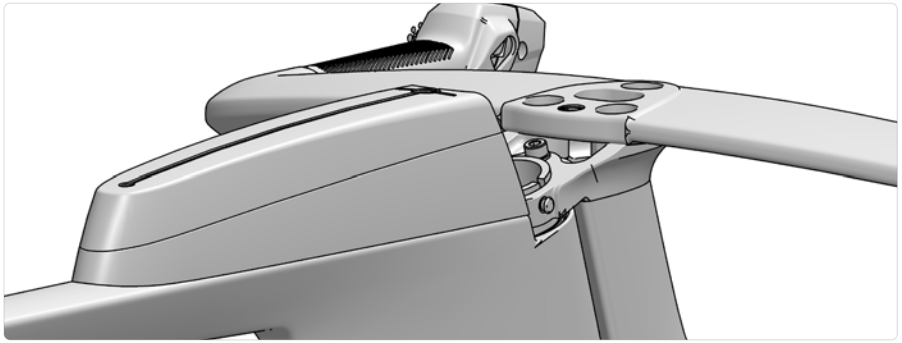

The handlebar fixing threads on the fork and the stack fixing screw on the handlebar have removable threaded inserts.

In case of damage, the threaded inserts can be changed to repair the fork or handlebar.

1. Remove the damaged threaded insert, using a flat head screwdriver.
2. Apply permanent threadlocker to the exterior threads of the threaded insert.
3. Position the threaded insert:

   On the fork: Flush with the top of the locating pins.

   On the handlebar: Centered on the handlebar threads.
4. Let the permanent threadlocker dry for 24 hours prior to continuing with the re-assembly.

22.1 BLEEDING PROCEDURE

1. Place the bike on a workstand, set the angle of the bike so the lever and the reservoir are parallel to the ground.
2. Remove pad.
3. Insert a disc brake piston setting tool or other non-sharp tool and push the pistons back into the caliper.
4. Using a 2mm Allen key, remove the reservoir bleed plug. Set aside.
5. Insert the knurled bleed fitting supplied with the bleed kit into the reservoir port. Firmly attach a long plastic tube over the bleed fitting, placing the other end into a clean, dry empty bottle or plastic bag.
6. Fill the syringe halfway with brake fluid. Hold the syringe vertically with the tip up and tap out any air bubbles.
7. Secure the oil-filled syringe hose onto the caliper bleed valve.
8. Use a disc brake piston setting tool or equivalent spacer to keep the pistons from moving.
9. Loosen the bleed valve 1/8-1/4 turn or remove the bleed cap
10. While holding the pistons in place, start filling the brake with new mineral oil by pushing the syringe. Air bubbles may come out of the reservoir. Continue pushing fluid until you no longer see bubbles coming out of the tube.
11. Close the caliper bleed valve. Tighten to 0.3 - 0.5 Nm (2.8-4.3in lbs.)
12. Remove the syringe.
13. Repeatedly squeeze the brake lever a few times. You may see a few more bubbles come up. The action should feel stiff, not spongy.
14. Remove the knurled bleed fitting.
15. Replace reservoir bleed plug. Tighten to 2 - 4 Nm (18 - 35 in/lbs.)
16. Wipe off any excess oil from the lever and caliper body.



For more technical information and documentation, please refer to TRP's website : https://trpcycling.com/downloads/

22.2 BRAKE PAD CHANGE

1. Position pad on opposite sides of the holder so that the two braking surfaces are facing each other.
2. Taking care not to touch the braking surfaces, push the pads in the holder together and insert into the caliper so that the protruding lip with the retainer bolt (81549) hole is aligned with the bolt hole caliper.
3. Insert the retainer bolt and tighten it with a 3mm Allen key. Final tightening torque should be 3 - 5 Nm.

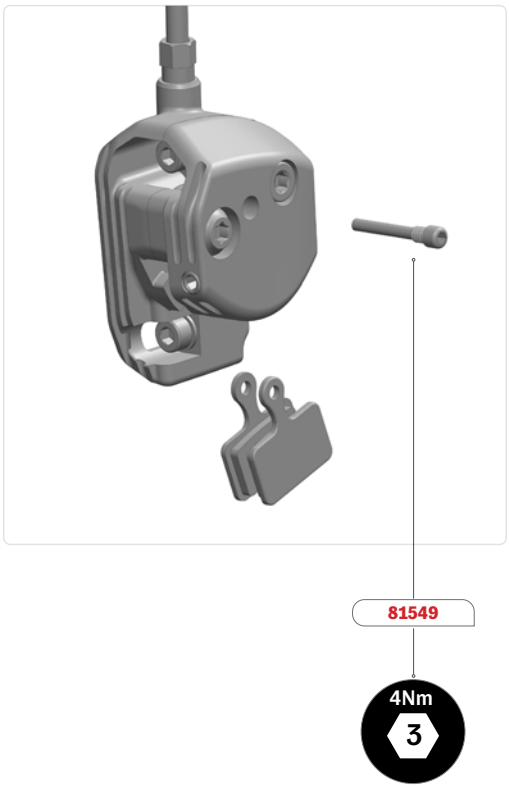

New pads require about **30-40 full stops** to achieve their optimum braking power. This process is called bedding-in. After bedding-in is complete, you may need to reajust the pads.

22.3. BRAKE BEDDING PROCEDURE

To ensure optimal performance and rider safety please follow these instructions.

1. **Pad/Rotor bed in procedures** : Before you start, please note that TRP/Tektro rotors use a harder steel that may require a slightly more extensive bedding-in process than other makes, but they offer longer life. Please also note the pad type used as metallic pads require a longer bedding-in process before being ready to ride. Proper pad/rotor bedding is key to brake performance over the life of the pads and rotors. Failure to follow these procedures will result in poor brake performance for the life of the pads.

2. The following procedures are for new rotors and metallic pads. If using semi-metallic pads or used rotors, the bedding-in process may be quicker. For optimal brake performance, it is best to follow the complete instructions.

3. Begin by installing rotor and pads. Be careful not to touch the braking surface of the rotor or pad to avoid contamination. Also, the rotor may heat up during the bedding process. Do not touch the rotor as it could be hot resulting in a burn or bodily harm. If a used rotor is being matched with new pads be sure to clean the rotor with isopropyl alcohol and a clean shop towel before installing pads.

4. Once pads and rotors are installed, take your bike to a flat area clear of obstacles. Pedal your bike up to 15 mph (24 km/h). Brake using the front brake only until you decelerate to 5 mph (8 km/h) and release the brake. Be careful not to engage the brake hard enough to stop the front wheel or lift the rear wheel off the ground. Stopping the wheel with the brake engaged will hold a hot pad to a hot rotor and can cause pad glazing which reduces brake performance. Repeat this process up to 20-25 times or until full brake power is achieved.

5. Once you have successfully bedded-in the font brake, repeat the process with the rear brake. When decelerating with the rear brake be careful not to stop the wheel from spinning or skidding.

22.4. ADDITIONNAL DOCUMENTATION

PAD TYPES

Semi-Metallic (Red Backed) :
The semi metallic compound will bedin quickly and operate with minimal noise but may wear quickly in wet conditions compared to a full metallic compound. These pads are best for riders looking for minimal noise, riding in dry conditions, or looking for optimal modulation.

Full Metallic or Sintered (Copper Backed) :
These pads may generate more noise when cold. Once heated up during use they should be relatively quiet. These pads will offer more bite, higher optimal operating temperatures, and longer pad life over semi-metallic pads. Metallic pads are optimal for riders looking for maximum braking performance, riding in wet conditions, looking for maximum pad life, or looking for more bite/power.

For more technical information and documentation about the braking system, please refer to TRP's website :
https://trpcycling.com/downloads/

For troubleshooting and FAQs, please visit :
https://www.parktool.com/blog/repair-help