NIVELCO

NIPRESS

DD-200

Differential pressure transmitter

User's and Programming manual

Manufacturer:
NIVELCO Process Control Co.
H-1043 Budapest, Dugonics u. 11.
Tel.: (36-1) 889-0100 Fax: 889-0200
E-mail: sales@nivelco.com www.nivelco.com

TABLE OF CONTENTS

1. INTRODUCTION....3
2. ORDER CODE....3
3. TECHNICAL SPECIFICATION....4
   3.1 DIMENSIONS....5
   3.2 ACCESSORIES....5
   3.3 SPECIAL CONDITIONS OF SAFE USE....6
4. INSTALLATION....6
   4.1 INSTALLATION INSTRUCTION....7
5. WIRING....8
   5.1 HART® COMMUNICATION....9
   5.2 EXAMPLES OF ARRANGEMENTS....9
6. PROGRAMMING....9
   6.1 STRUCTURE OF THE MENUSYSTEM....10
   6.2 DESCRIPTION OF THE MENUSYSTEM....11
7. TROUBLESHOOTING....15
8. MAINTENANCE AND REPAIR....16
9. STORAGE CONDITIONS....16

Thank you for choosing NIVELCO instrument.
We are convinced that you will be satisfied with our product!

1. INTRODUCTION

NIPRESS DD-200 differential pressure transmitters with stainless steel (optionally HASTELLOY® C-276) sensor and two pressure ports can be used in in 2-wire system. The differential pressure transmitter measures the difference between the two pressure ports and converts it into a proportional voltage and current output. The differential pressure transmitters' main application area is the process industry, and can be used exceedingly in closed, pressurized tanks.

The transmitter is capable to communicate via HART® and can be parameterized using three miniature keys on the LCD display module, or the magnetic switches located under the metal cap, or by a HART® communicator. Ex or SIL versions are also available.

2. ORDER CODE (NOT ALL COMBINATIONS POSSIBLE!)

NIPRESS D D G – 2 ☐ ☐ – ☐*

Measuring method	Code
Differential	**D**

Process connection	Code
¼" NPT(2)	**G**

Range(1) / Max. static pressure (bar)	Code
0 – 0.01 / 160	**2**
0 – 0.06 / 160	**7**
0 – 0.4 / 160	**D**
0 – 2.5 / 160	**H**
0 – 20 / 160	**M**

Accuracy	Code
0.1%	**4**
0.075%	**7**

Output / Ex	Code
4 – 20 mA + HART®	**4**
4 – 20 mA + HART® / Ex ia(3)	**8**
4 – 20 mA + HART® / Ex d(3)	**B**
4 – 20 mA + HART® / Ex ia SIL2(3)	**E**
4 – 20 mA + HART® / Ex d SIL2(3)	**F**

**Ex versions are marked "Ex" right after the type designation on the label*
(1) Customized measuring ranges are optionally available if negotiated prior to order placement
(2) Internally threaded process connection
(3) Ex or SIL versions are available upon special request

Note:
- *When ordering Ex certified units, the order code should end in 'Ex' tag.*
- *In case of non-standard sensor types, sealing and housing has to be specified in the order.*

3. TECHNICAL SPECIFICATION

Type		DDG–2□4–□	DDG–2□7–□
Measurement range		0 – 20 bar (0 – 290 psig)	
Overload capability		According to the order code	
Accuracy		±0.1%	±0.075%
Medium temperature (with silicone oil filling)		-40 °C … +100 °C (-40 °F… +212 °F) (+125 °C [+257 °F] for a short time, up to 30 minutes)	
Ambient temperature[1]		Without display: -40 °C … +85 °C (-40 °F… +185 °F) With display: -20 °C … +65 °C (-4 °F … +149 °F)	
Materials of the wetted parts	Sensor	Stainless steel 1.4435 (316L), optional: Hastelloy® C-276 (2.4819)s	
	Sensor seal	FKM, optional: EPDM	
	Process connection	Stainless steel 1.4401 (316)	
Housing		Aluminum die cast	
Output signal		4 – 20 mA (2-wire) + HART®	
Power supply (U_{Supply})[1]		12 – 28 V DC	
Load resistance		$R_{max} = (U_{Supply} – U_{Supply\ min.})/0.02\ A\ [\Omega]$ Load during HART® communication: $R_{min} > 250\ \Omega$	
Process connection		According to the order code	
Electrical connection		Terminal clamps in clamping chamber	
Ingress protection		IP67	
Electric protection		Class III (SELV)	
Mass		~3.5 kg (~7.7 lb)	

[1] For information of Ex certified devices see Special data for Ex certified models chart.

SPECIAL DATA FOR EX CERTIFIED MODELS

ATEX approval, Ex ia

Type	DDG–2□□–8 Ex, DDG–2□□–E Ex
Ex marking	Ⓔx II 1/2G Ex ia IIB T4 Ga/Gb, Ⓔx II 1D Ex ia IIIC T85 °C Da
Ex reference document	ddg2848a0600p_03
Power supply	12 – 28 V DC
Intrinsically safety data	U_{imax} = 28 V DC, I_{imax} = 98 mA, P_{imax} = 680 mW, C_i = negligible, L_i = negligible The maximal interior capacity between the power supply connections and the metal housing is 27 nF
Permissible medium temperature, atmospheric pressure	Zone 0: -20 °C ... +60 °C, 0.8 bar ≤ p_{atm} ≤ 1.1 bar Zone 1, 2: -40 °C … +70 °C

ATEX approval, Ex d

Type	DDG–2□□–B Ex, DDG–2□□–F Ex
Ex marking	Ⓔx II 2G Ex db IIC T5 Gb
Ex reference document	ddg2848a0600p_03
Power supply	13 – 28 V DC
Permissible medium temperature	-20 °C … +70 °C
Cable entry	Metal M20x1.5 cable gland with Ex d certification

3.1 DIMENSIONS

Aluminum housing with display

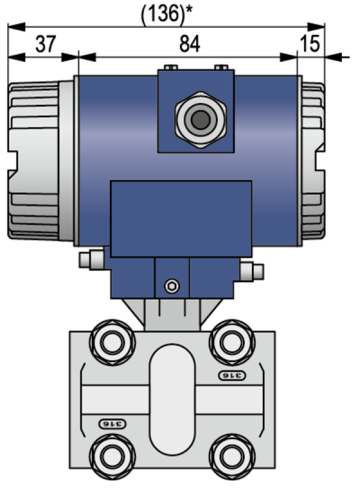

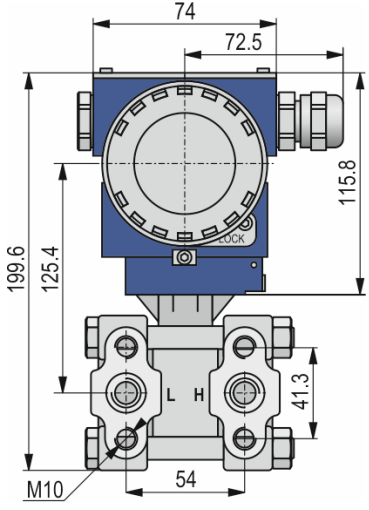

3.2 ACCESSORIES

- User's and Programming Manual
- Warranty Card
- EU declaration of Conformity

3.3 SPECIAL CONDITIONS OF SAFE USE

- Before turning on the device, make sure the installation is complete, with no defects visible.
- The device may only be used within the limitations specified in the technical specifications.
- The electrical connection of the device must be carried out in a way that the IP20 ingress protection is always ensured!
- Ex ia certified transmitters may only be operated in certified and approved galvanically isolated intrinsically safe Ex ia IIC circuits complying with the technical data and the device's explosion protection marking.
- **Attention!** The devices may partially contain static charging capable plastic components. The presence of electrostatic charges may cause a risk of spark generation and ignition and therefore electrostatic charges must be completely prevented!
  - Avoid friction on plastic surfaces!
  - Do not clean the device dry!
  - For example, use a wet duster!
- Use exclusively Ex d IIC cable entry for devices with Ex d flameproof protection!
- For Ex d models, the cover must be secured against opening after the cover is closed by a safety locking screw!
- With 1/2 Ex marking device, the sensor membrane also serves as a partition between the Ex zones, therefore it must be protected against mechanical damage.
- The aluminum content of the die-cast aluminum alloy case exceeds the limit, which requires the device must be protected against any possible sources of spark or ignition resulted by impact or friction effects in an Ex environment.
- The metal housing of the device must be connected to the EP (equipotential) network!

4. INSTALLATION

To enable the replacement of the instrument during the operation is uninterrupted, the use of closing armature is recommended. A simple ballcock valve will be suitable for lower pressures, but for higher ones (above 6 bar) a three-way blow-off needle-valve is suggested.
The device can be installed in-, or out-doors. Select the mounting position so that there is enough space for installation, programming and reading of the display. Do not expose the device to direct sunlight when using outdoors! If you do so, direct solar radiation might cause the permissible operating temperature of the device is exceeded. This is to be particularly avoided in case if the device is used in any explosion-hazardous area!
Select the operating position, so that splashed and condensed water can be drained off. Stationary liquid on sealing surfaces must be avoided! If the device has cable outlet, the outgoing cable must be routed downwards.

Installation position: individually specified.

4.1 INSTALLATION INSTRUCTION

The measured medium – depending on its type and properties, might be hazardous to the installer. Therefore, the wear of appropriate protective clothing, gloves, and goggles is recommended.

For the sake of noise suppression, the differential transmitter housing is grounded. If the grounding of the process is correct, no further grounding of the device is required, otherwise the instrument should be grounded.

Install the device only in depressurized and disconnected state!

The higher pressure must be connected with input “H”, the lower pressure must be connected with input “L”.

Do not install the device where there is any risk of explosion. Do not open or configure the device in explosive area under normal operating conditions! For this reason, it is recommended that the display and operating module is positioned at the same time as the mechanical installation.

An important feature of the **NIPRESS DD-200** family, that the individual functions can be set with the help of three miniatures, or by the magnetic switches located under the metal cap. The later has the advantage that the device can be configured with the magnetic switches without opening the chambers. **Right after configuration, the metal cap has to be reinstated and tightened again, by hand!**

Ensure that moisture cannot enter the device! The seals and sealing surfaces must not get dirty, as (depending on the type and location of the application) foulings might cause a reduced degree of protection and conclusively might even lead to device failure or an irreparable damage of the device.

Positioning the display:

The display and the operating module can be rotated, to guarantee easy readability even in unusual mounting positions. The limiter is located on the module, and allows the part to be rotated by 315°.

Tightening torques:

½" NPT: kb. 70 Nm.

The specified tightening torques must not be exceeded!

Installation steps for NPT process connection:

Use suitable seal (e. g. a PTFE-strip)! Screw the device into the correct thread by hand, and tighten it with a wrench!

5. WIRING

In order to electrically connect the device with the connecting terminals, the cover must be removed.
Use a shielded and twisted multicore cable for the electrical connection.
Electrically connect the device with connecting terminals, then reinstate the cover by hand and make sure that the housing is tightly closed again.
For devices with flameproof housing, a M20x1.5 cable gland HSK-M-Ex-d / Metr. is prescribed; which is already pre-mounted.
Technical data of Ex d cable gland:

- cable diameter: Ø10 – Ø 14 mm;
- width across flats: 24 mm;
- continuous operating temperature: -60 °C … +105 °C (-76 °F … +221 °F);
- certificate: Ex II 2G Ex db IIC Gb.

The DD-200 device family can be ordered with die-cast aluminum housing. The wiring can be connected from the windowless side, while the unit can be parameterized using the display and push buttons from the other side where there is a window.

For devices with cable gland, make sure that the external diameter of the cable used is within the allowed clamping range! Once connected the wires, tighten the gland screw firmly until the sealing is proper!

The bending radiuses of the cables have to comply with the following:
Cable without ventilation tube:
- static installation: 8-fold cable diameter,
- dynamic application: 12-fold cable diameter.

Cable with ventilation tube:
- static installation: 10-fold cable diameter,
- dynamic application: 20-fold cable diameter.

Wiring diagram

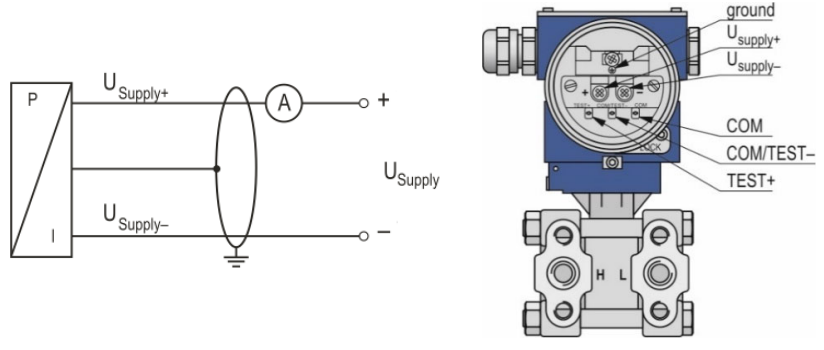

Pin configuration

Wire cross section max. 2.5 mm²	
Power supply +	$U_{supply+}$
Power supply –	$U_{supply-}$
COM	Test connection points [1]
COM/TEST-	
TEST+	
Shield	GND

[1]By connecting an ammeter between TEST+ and COM/TEST points, the output signal (mA) can be checked without disconnecting the supply voltage.

5.1 HART® COMMUNICATION

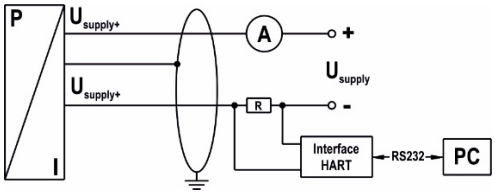

The device can be configured using the keys, magnetic switches or by a HART® compatible device. In order to ensure the operation is flawless, the following requirements must be taken into account:

Maximum cable length between measuring device and supply:

where L_{max} maximum length of cable in [m], R_v resistance of cable together with load resistance in [Ω], and C_v capacity of cable in [pF/m].

$$L_{max} = \frac{65 \cdot 10^6}{R_v \cdot C_v} - \frac{40 \cdot 10^3}{C_v}$$

Resistance (R):

where U is Power Supply [V DC]. The resistance must be at least 240 Ω.

$$R = \frac{U - 12}{0{,}024}\ \Omega$$

5.2 EXAMPLES OF ARRANGEMENTS

4 – 20 mA, 2-wire pressure transmitter

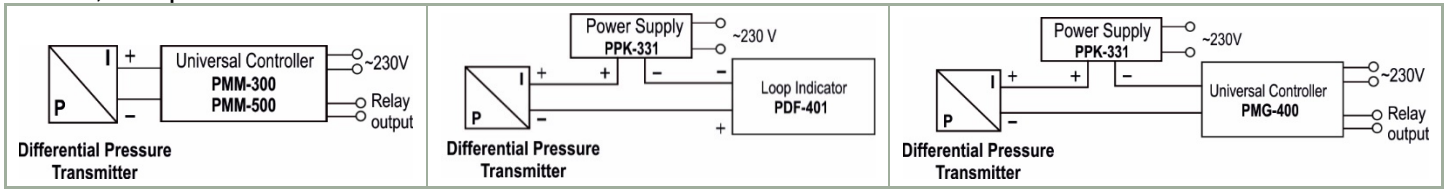

2-wire, Ex ia pressure transmitter

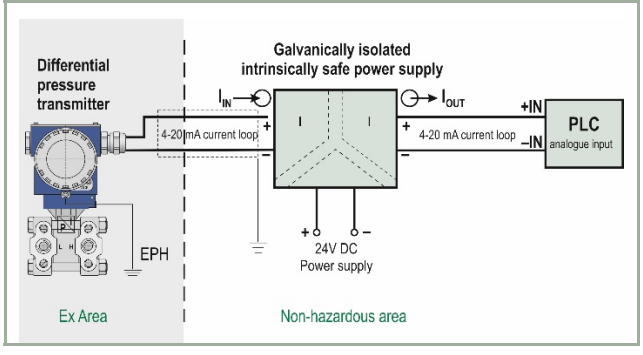

6. PROGRAMMING

The measured values are shown and the configuration of the individual parameters can be performed by the display in a menu. The individual functions can be set by three miniature push buttons, or by the magnetic switches located under the metal cap. **The configuration of the device using the magnetic switches is particularly advantageous, as doesn't require the removal of the cover.** Use a suitable bar magnet or a stronger magnetic screwdriver for this purpose, that fits into the socket. If required, a special screwdriver is available, with an end designed as a screwdriver and the other is as a bar magnet. Furthermore, a bar graph is shown in the display, indicating the current pressure input as percentage of the specified pressure range. The menu system is a closed one, which can be customized also, allowing you to scroll both forward and backward until the desired setting item. All settings are permanently stored in a Flash EPROM and can be retrieved even after disconnecting the device from the supply voltage.

6.1 STRUCTURE OF THE MENUSYSTEM

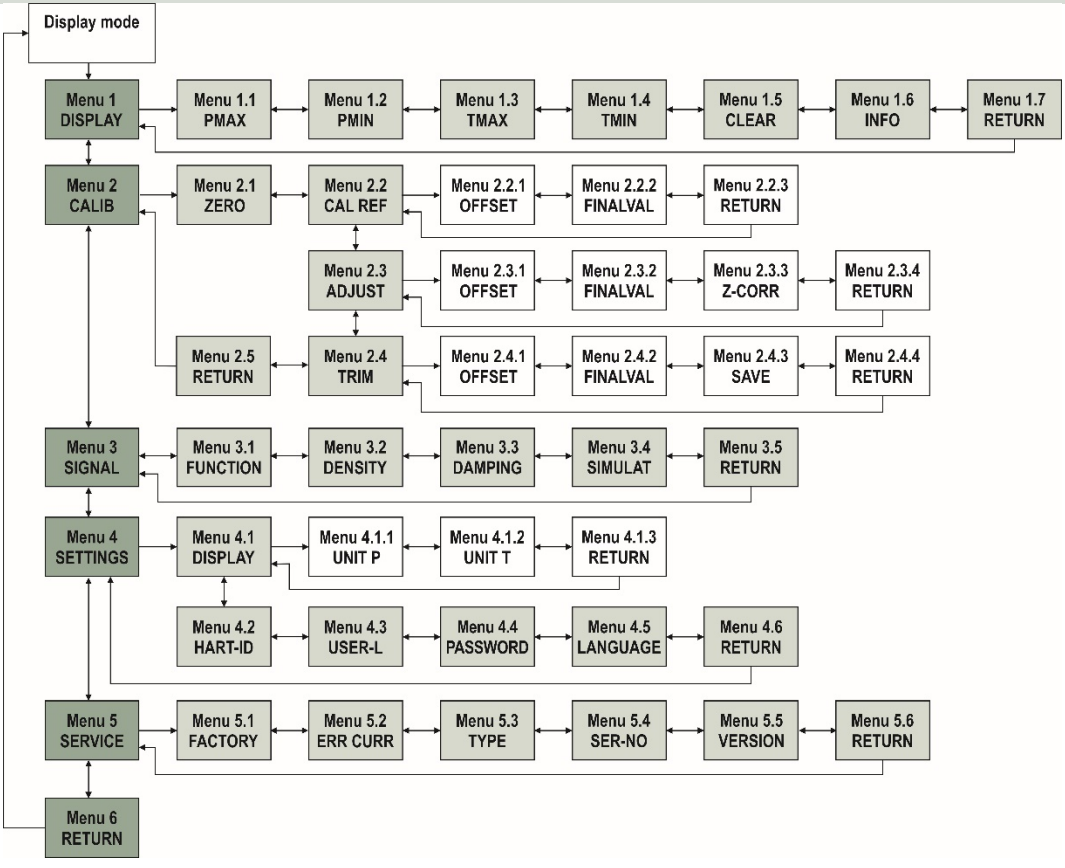

6.2 DESCRIPTION OF THE MENUSYSTEM

The parameters can be set using three miniature keys, or the magnetic switches located under the metal cap.
The functions of these keys are as follows:
▲ button: move forward in the menu system or increase the displayed value
▼ button: navigate backward in the menu system or decrease the displayed value
OK button: to be used to confirm selected menu items and set values.
Execution of configuration:

1. Select the desired menu item using the ▲ - or ▼ - keys.
2. Hit OK key to activate the selected menu item.
3. Set the desired value or select one of the offered settings using the ▲ - or ▼ -keys.
4. Hit the OK-button to store/confirm the set value/selected setting and exit the menu.

Set value:
If a parameter is configured by providing a value, the value is to configured by digits. This means, that after a menu item (e. g. "2.3.1 OFFSET") is configured by pressing the OK button, the first digit of the value to be set will start to blink. Navigate up or down until the desired digit using the ▼ - or ▲ -button and confirm the selection by pressing the OK-key. After that, the next digit will start to blink. Configure it in the same way. In the menu items "2.3.1 OFFSET" and "2.3.2 FINALVAL", the decimal point will then start to blink and it is also possible to change its position using the ▼ - or ▲ - keys.
Finally, the total value, set by digits, could be stored - if applicable- by pressing the OK key. If the value is out of range, an error message (e. g. Error 03) will be displayed and the set value will not be stored.
If you intend to set a negative value, the first digit has to be configured with the ▼ -button.

Menu list	Description
1 DISPLAY	**Display parameter**
1.1 P_{max}	**Maximum pressure display (high pressure)** The maximum pressure that occurred during the measurement is shown on the display.
1.2 P_{min}	**Minimum pressure display (low pressure)** The minimum pressure that occurred during the measurement is shown on the display.
1.3 T_{max}	**Maximum temperature display (high temperature)** The maximum temperature that occurred during the measurement is shown on the display.
1.4 T_{min}	**Minimum temperature display (low temperature)** The minimum temperature that occurred during the measurement is shown on the display.
1.5 CLEAR	**Delete the values 1.1-1.4 (P_{max}, P_{min}, T_{max}, T_{min})**
1.6 INFO	**Configuration of the display** **Applicable values per digits:** "1": 1st line: measured pressure; 2nd set pressure unit "2": 1st line: Output signal; 2nd line: mA "3": 1st line: measured temperature; 2nd line: °C "4": 1st line: measured pressure; 2nd line: Change between pressure unit / output signal in mA "5": 1st line: measured pressure; 2nd line: Change between pressure unit / temperature in °C "6": 1st line: measured pressure; 2nd line: Change between pressure unit / output signal in mA / temperature in °C
1.7 RETURN	**Return to menu 1 DISPLAY**

Menu list	Description
2 CALIB	**Configuration of measuring range, display and output signal**
2.1 ZERO	**Zeroing the display** The message “CONFIRM” appears on the display when selecting the subsidiary menu item with the OK button. By pressing and holding the OK button for at least 2 seconds the zeroing is performed, and the message “CONFIRM” disappears from the display.
2.2 CAL REF	**Adjusts the analogue output with pressure reference**
2.2.1 OFFSET	**Adjusts the starting value for the output signal** After the reference pressure has been applied and accepted, selecting the subsidiary menu item with the OK button causes the message "CONFIRM" to appear on the display. By pressing and holding the OK button for at least 2 seconds the applied pressure is specified as the starting value for the output signal (4 mA), and the message "CONFIRM" disappears from the display. The displayed value remains unchanged.
2.2.2 FINALVAL	**Adjusts the end value for the output signal** After the reference pressure has been applied and accepted, selecting the subsidiary menu item with the OK button causes the message "CONFIRM" to appear on the display. By pressing and holding the OK button for at least 2 seconds the applied pressure is specified as the end value for the output signal (20 mA), and the message "CONFIRM" disappears from the display. The displayed value remains unchanged.
2.2.3 RETURN	**Return to menu 2.2 CAL REF.**
2.3 ADJUST	**Sets the measuring range and the zero point**
2.3.1 OFFSET	**Sets the starting value of the measuring range** The ▲ and ▼ buttons allow you to define a starting value for the measuring range. The permitted input range is between 0 – 90% of the original measuring range (turn down max. 1:10). 4 mA is output when the value that has been entered is reached.
2.3.2 FINALVAL	**Sets the end value of the measuring range** The ▲ and ▼ buttons allow you to define an end value for the measuring range. The permitted input range is between 10 – 100% of the original measuring range (turn down max. 1:10). The output will be exactly 20 mA when the terminal value is reached.
2.3.3 Z-CORR	**Zero-point correction of the display and output signal** The message "CONFIRM" appears on the display when selecting the subsidiary menu item with the OK button. By pressing and holding the OK button for at least 2 seconds the applied pressure is set as the starting value for the output signal (4 mA), and the display is zeroed. The message "CONFIRM" disappears from the display.
2.3.4 RETURN	**Return to menu 2.3 ADJUST**
2.4 TRIM	**Return to menu 2 CALIB**
2.4.1 OFFSET	**Set Zero-point** The message "CONFIRM" appears on the display when selecting the subsidiary menu item with the OK button. By pressing and holding the OK button for at least 2 seconds the applied pressure value is specified as the starting value for the output signal (4 mA). The message "CONFIRM" disappears from the display.
2.4.2 FINALVAL	**Set end value** The message "CONFIRM" appears on the display when selecting the subsidiary menu item with the OK button. By pressing and holding the OK button for at least 2 seconds the applied pressure value is specified as the ending value for the output signal (20 mA). The message "CONFIRM" disappears from the display.
2.4.3 SAVE	**Save Settings** The message "CONFIRM" appears on the display when selecting the subsidiary menu item with the OK button. By pressing and holding the OK button for at least 2 seconds the applied values are saved and the message "CONFIRM" disappears from the display. To save, both functions (2.4.1 and 2.4.2) must be performed.

Menu list	Description
2.4.4 RETURN	**Return to menu “2.4 TRIM”.**
2.5 RETURN	**Return to menu “2 CALIB”**
3 SIGNAL	**Signal parameters**
3.1 FUNCTION	**Function selection** "LINEAR" (linear function) “2SQR” $y = \sqrt{x}$ “2SQR3POW” $y = \sqrt{x^3}$ “2SQR5POW” $y = \sqrt{x^5}$ } cut off 2%
3.2 DENSITY	**Input of the density** Definable range: 100 — 9999 kg/ m³ Conversion is only applicable to the units [mFH], [cmFH] and [mmFH].
3.3 DAMP	**Configuration of the damping** Definable range: 0 — 100 s
3.4 SIMULAT	**Simulation of the output signal** Definable range: any, for example: 3.7 — 22 mA.
3.5 RETURN	**Return to menu 3 SIGNAL**
4 SETTINGS	**Basic settings**
4.1 DISPLAY	**Configuration of the display unit**
4.1.1 UNIT P	**Configuration of the unit for pressure Units:** bar, mbar, g/cm², kg/cm², Pa, kPa, Torr, atm, mH2O, ftH2O, MPa, mFH*, cmFH*, mmFH*, mmH2O, mmHg, psi The conversion of all pressure-related parameters is performed automatically. *Input of the density is required. (see 3.2)
4.1.2 UNIT T	**Configuration of the unit for temperature** Units: °C and °F
4.1.3 RETURN	**Return to menu 4.1 DISPLAY**
4.2 HART-ID	**HART-ID (only to be set with HART® devices in multi-drop mode)** Set the desired ID no. (between "0" and "15") and confirm the setting by the OK button. The configuration of this value is only required if you want to operate the device in multi-drop mode (connection of multiple, HART® compatible devices). If the ID no. is set to "0", the multi-drop mode is deactivated, and the measurement transducer operates in analogue mode.
4.3 USER-L	**Configuration of the user's security level** For security reasons it is necessary to enter the password before configuring the security level. Confirm this by the **OK** button. The default password is factory-preset to “0000”. Security levels: "0": the whole menu system is enabled "1": the following menu items are enabled: 1 DISPLAY, 3 SIGNAL, 4.3 USER-L "2": the following menu items are enabled: 1 DISPLAY, 4.3 USER-L

Menu list	Description
4.4 PASSWORD	**Configuration of the password** For security reasons it is necessary to enter the previous password to start the configuration. Confirm the value by the OK key. (The password is factory-preset to "0000".) Then set the new password and confirm it with the **OK** key. If you forgot your password, you may request for the master password, which is provided by the manufacturer, NIVELCO.
4.5 LANGUAGE	**Select DE for German or EN for English language**
4.6 RETURN	**Return to menu 4 SETTINGS**
5 SERVICE	**Service**
5.1 FACTORY	**Reset to factory settings**
5.2 ERR CURR	**Definition of the fault current** Definable values: 21.6 mA or 3.8 mA; the selected fault current value indicates the malfunction of the electronics.
5.3 TYPE	**Displays the device type**
5.4 SER-NO	**Displays the set serial number**
5.5 VERS	**Displays the program version (firmware)**
5.6 RETURN	**Return to menu 5 SERVICE**
6 RETURN	**Return to DISPLAY MODE**

ERROR MESSAGES

PASSED PARAMETER TOO SMALL	Entered parameter value is too small.
PASSED PARAMETER TOO LARGE	Entered parameter value is too large.
LOOP CURRENT NOT ACTIVE	Loop current is not active (HART ID > 0, device works in Multidrop mode).
APPLIED PROCESS TOO LOW	Applied process pressure is too low.
APPLIED PROCESS TOO HIGH	Applied process pressure is too high.
LOWER RANGE VALUE TOO HIGH	Lower range value (OFFSET) is too high.
LOWER RANGE VALUE TOO LOW	Lower range value (OFFSET) is too low.
UPPER RANGE VALUE TOO HIGH	Upper range value (FINALVAL) is too high.
UPPER RANGE VALUE TOO LOW	Upper range value (FINALVAL) is too low.
SPAN TOO SMALL	Span too small.
DEVICE MALFUNCT	Internal failure (HW) please send the device to NIVELCO for repair!

7. TROUBLESHOOTING

Fault	Possible causes	Fault detection / remedy
No output signal:	Improper connection.	Check the connections!
	Broken conductor/wire.	Check all wires using a cable tester!
	Defective measuring device (signal input).	Check the ampere meter (and its fuse) and the analogue input of the signal processing unit!
Analog output signal too low:	Load resistance too high.	Check the value of the load resistance!
	Supply voltage too low.	Check the power supply and power / current on the transducer / transmitter!
	Energy supply failure.	Inspect the power supply and the applied supply voltage at the device.
Slight shift of the output signal:	The diaphragm of the sensor is severely contaminated.	Cleaning with non-aggressive cleaning solutions, soft brush or sponge.
	The diaphragm of the sensor is calcified or crusted.	It is recommended to clean carefully to ensure all the dirt is completely removed.
Large shift of the output signal:	The diaphragm of the sensor is damaged (caused by overpressure or a mechanical impact).	Check the diaphragm of the sensor, if it is damaged then send the device back to the manufacturer!
Measured value (display and analogue output) deviates from the nominal value:	High pressure / pressure peaks.	The device must be returned to the manufacturer for recalibration or replacement of the pressure port.
	Mechanical damage of the diaphragm.	
Constant output signal at 4 mA:	Wrong ID number.	Make sure that the preset value under menu item “ID” is “0000”!

8. MAINTENANCE AND REPAIR

The instrument does not require regular maintenance. The repair should only be carried out at NIVELCO's premises.
When disconnecting the device, it must always be done in depressurized and disconnected state! Drain the medium before disconnecting the device.
If necessary, clean the diaphragm carefully with non-aggressive cleaning solution, soft paint-brush or sponge. Improper cleaning may cause the irreparable damage of the diaphragm. For this reason, never use sharp objects or pressurized air for cleaning the diaphragm.
Before returning your device for repair, it has to be cleaned carefully, neutralize/decontaminate the parts wet from the medium might contain harmful substances. Our official form (Returned Equipment Handling Form) must be enclosed after downloaded from our homepage www.nivelco.com. You should dispatch the device with a declaration of decontamination. In the declaration, you have to provide a statement that the decontamination process is completed, and the device is clean and free from harmful material and there is no hazardous substance on it.

9. STORAGE CONDITIONS

Storage temperature:

Without display:	-40 °C ... +85 °C (-40 °F … +185 °F)
With display:	-20 °C … +65 °C (-22 °F … +149 °F)

NIVELCO reserves the right to change technical data without notice!