FlatRail eXtreme

FlatRail eXtreme linear translation stages are designed to run in extreme environmental conditions such as Vacuum, and Ultra High Vacuum and radiation exposure.
The low profile design, offered in two sizes, provides high stiffness with several standard available travel ranges. This essential and reliable design matches high load capacity with sub-micron minimum incremental motion and high repeatability.
Two micro switches and hard stops, a manual knob allows to move the stage manually while the motor is off. Optional double carrier improves load and movement capacity (eg. for multi axes assemblies). These stages can be equipped with linear encoder systems either incremental or absolute.

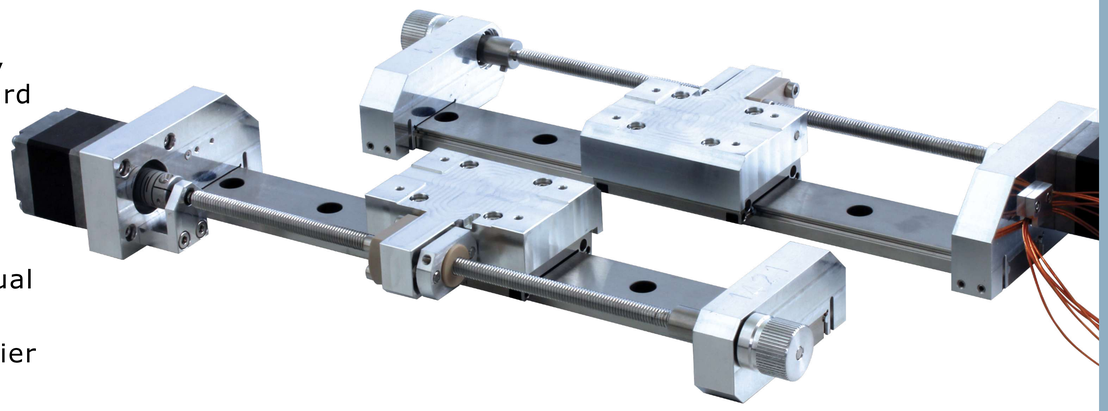

FlatRail eXtreme
Motorized linear stages

- low profile
- UHV, RAD Hard and Cryo
- lubricant-free drive
- lead-crew with preloaded nut
- stroke from 15 to 450
- closed loop option
- double carrier option

FRX-S-1

FlatRail Small size with single carrier

Stroke	B	C	N
25	116	28	2
65	156	48	3
105	196	68	4
145	236	88	5
185	276	108	6
225	316	128	7
265	356	148	8

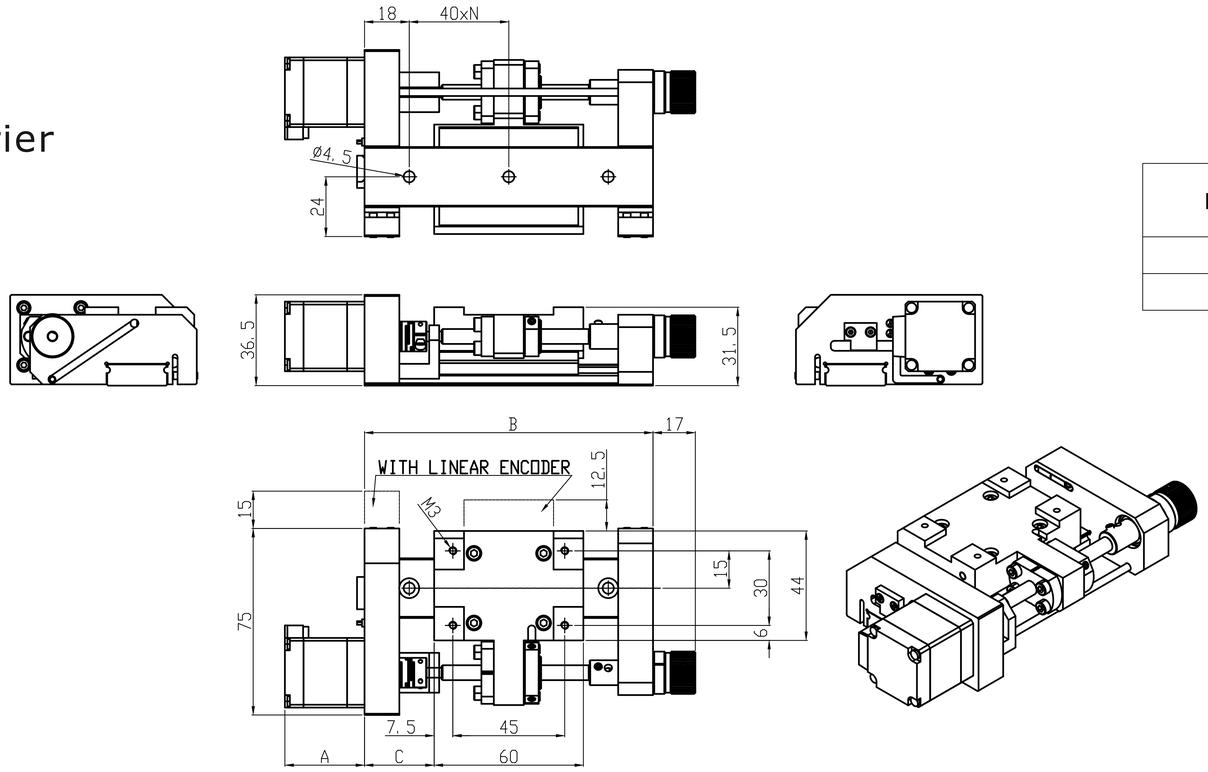

Motor type	A
V	32
HV or UHV	38

Via Redipuglia 8 - 20008 Bareggio (MI) - Italy. phone +39 02 90363318 www.vacuumfab.it info@vacuumfab.it

FRX-S-2

FlatRail Small size with double carrier

Stroke	B	C	N
65	236	48	6
105	276	68	6
145	316	88	7
185	356	108	8

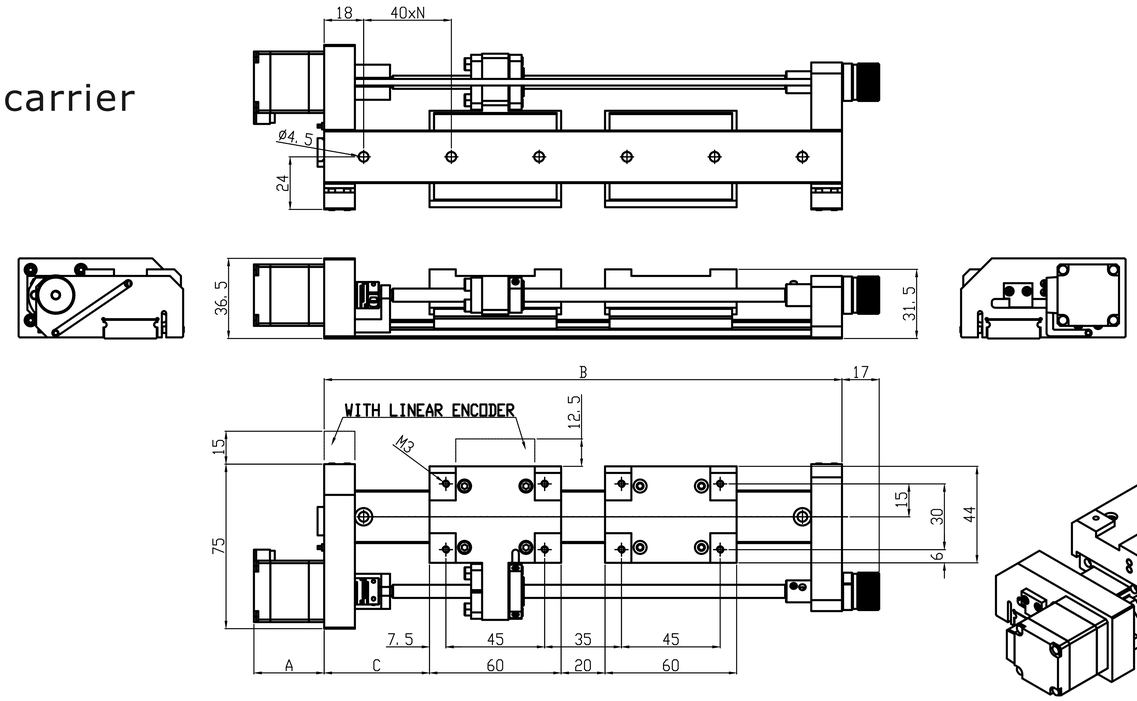

Motor type	A
V	32
HV or UHV	38

FRX-M-1

FlatRail Medium size with single carrier

Stroke	B	C	D	N
25	138	31	29	2
50	164	44	22	3
90	204	64	22	4
130	244	84	22	5
170	284	104	22	6
210	324	124	22	7
250	364	144	22	8
290	404	164	22	9
330	444	184	22	10
370	484	204	22	11
410	524	224	22	12

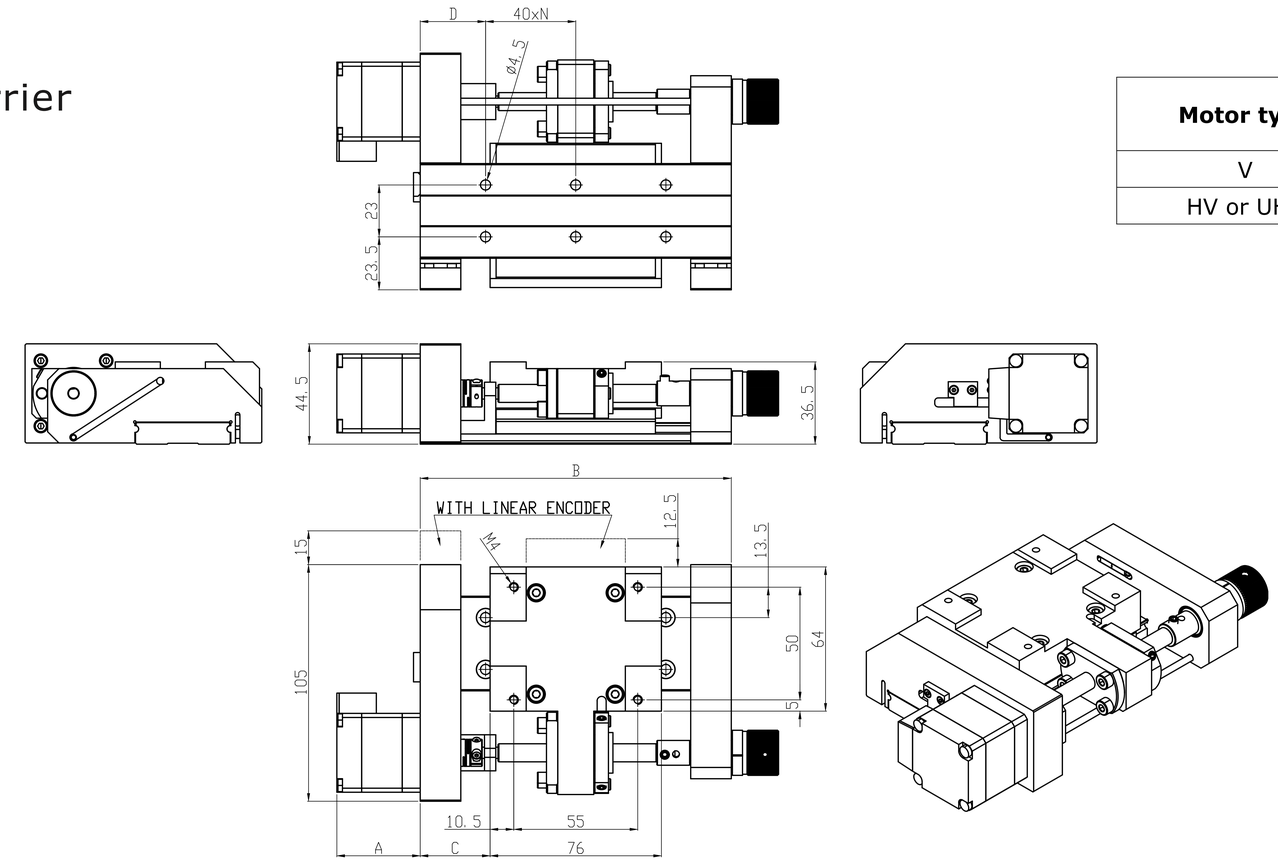

Motor type	A
V	32
HV or UHV	38

Via Redipuglia 8 - 20008 Bareggio (MI) - Italy. phone +39 02 90363318 www.vacuumfab.it info@vacuumfab.it

FRX-M-2

FlatRail Medium size with double carrier

Stroke	B	C	N
170	364	104	8
210	404	124	9
250	444	144	10
290	484	164	11
330	524	184	12

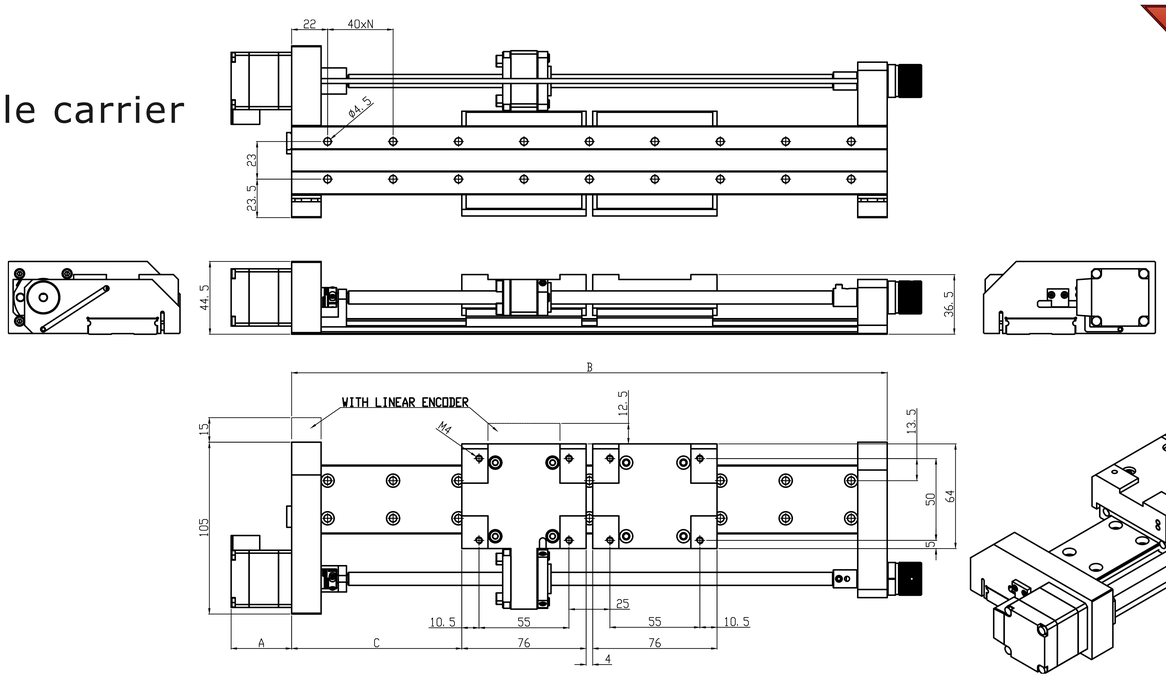

Motor type	A
V	37
HV or UHV	54

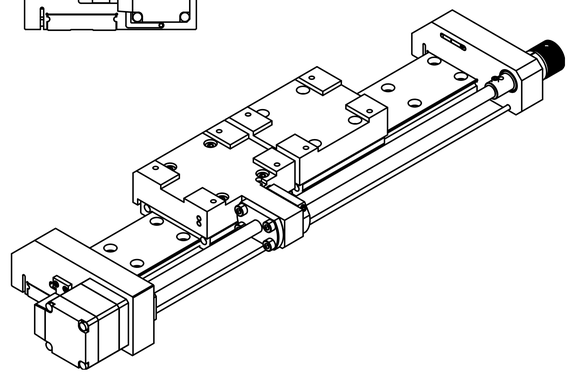

FlatRail series
Ordering Information

Flat Rail	Size	Carriers	Stroke	Motor
FR	S	1	25/65/105/145/185/225/265	V HV or UHV
		2	65/105/145/185	
	M	1	25/50/90/130/170/210/250/290/330/370/410	V HV or UHV
		2	170/210/250/290/330	

e.g.:
FR-S-2-145-HV *= Flat Rail Small size, double carrier, 145mm stroke with HV motor;*
FR-M-1-50-UHV-XYZ *= Flat rail Medium size, single carrier, 50mm stroke, UHV motor, XYZ configuration*

FRX-S-xyz

FlatRail Small size
xyz configuration

Stroke	A	B
25	129	187
65	149	227
105	169	267
145	189	307
185	209	347
225	229	387
265	249	427

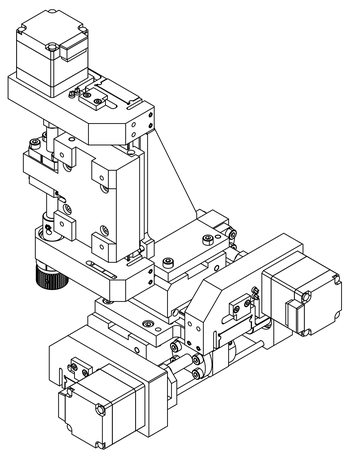

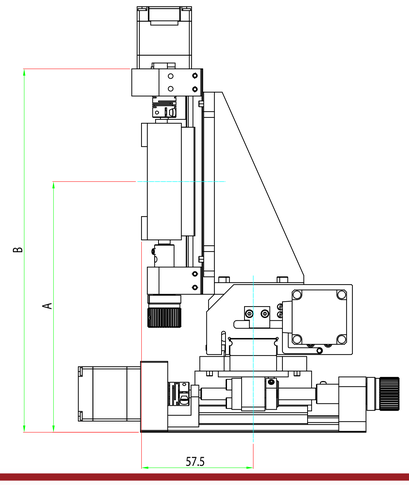

FRX-M-xyz

FlatRail Medium size
xyz configuration

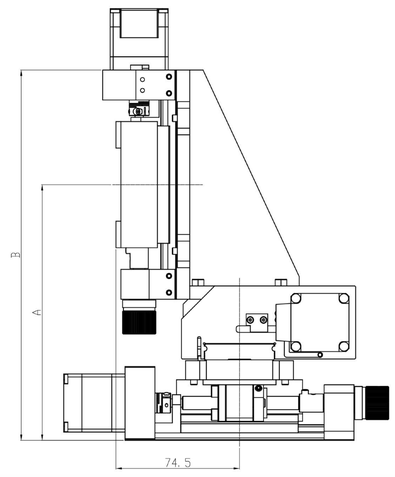

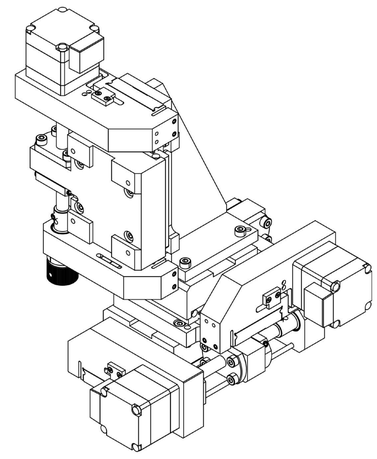

Stroke	A	B
25	154	223
50	167	249
90	187	289
130	207	329
170	227	369
210	247	409
250	267	449
290	287	489
330	307	529
370	327	569
410	347	609

Via Redipuglia 8 - 20008 Bareggio (MI) - Italy. phone +39 02 90363318 www.vacuumfab.it info@vacuumfab.it

Questionnaire

Fill in this questionnaire and mail it to ufficiovendite@vacuumfab.it to get our consultancy for the positioning system design, free of charges:

CUSTOMER'S REFERENCE

Name, surname: Institute/company:
Phone Number: Email:

WEIGHT/SPECIMEN INFORMATION

Dimensions (mm): lenght width height
Shape: (description or better attach drawing)
Weight (g):
Center of gravity coordinates from the center of the carrier (mm): X Y Z
Notes:

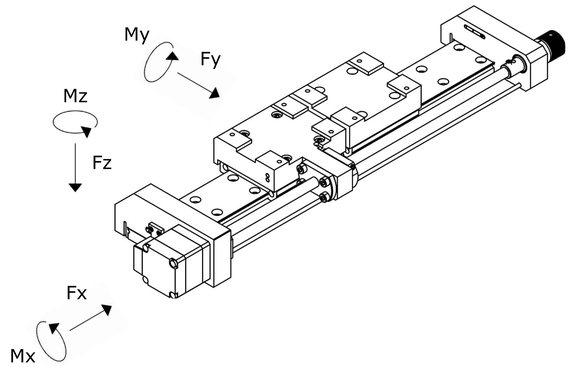

POSITIONING REQUIREMENT

Travel range required (mm):
Positioning resolution required (µm):
Repeatability required (µm): ☐ uni-directional ☐ bi-directional
Applied force (N): Fx Fy Fz
Applied Moment (Nm): Mx My Mz
Speed required (mm/s):
Acceleration required (mm/s²):
Duty Cycle:
Other degrees of freedom required: please specify and possibly add a sketch and a description f the application

WIRING REQUIREMENT

Cable lenght in air from the mechanics to the controller (m):

CONTROLLER REQUIREMENT

Motion control type: ☐ point to point ☐ linear interpolation ☐ contouring
Positioning application type: ☐ high resolution ☐ high repeatability
Computer connection port: ☐ Ethernet ☐ USB ☐ other (specify)
Software compatibility: ☐ DLL ☐ LabVIEW ☐ EPICS ☐ TANGO

Notes:

Date and signature:

Via Redipuglia 8 - 20008 Bareggio (MI) - Italy. phone +39 02 90363318 www.vacuumfab.it info@vacuumfab.it