RodRail eXtreme Series

RodRail linear stage for High Load in Cryogenic environments

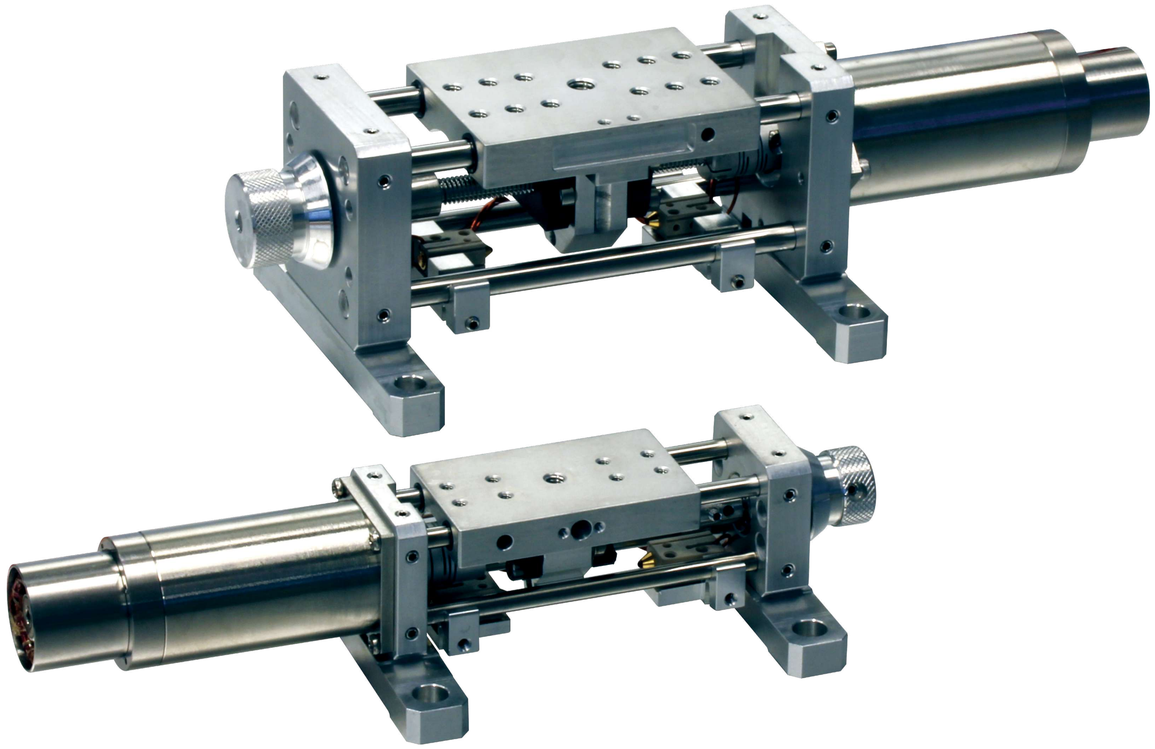

RodRail eXtreme

Motorized linear stages

- UHV, RAD Hard and Cryo
- lubricant-free drive and bearings
- lead-crew with preloaded nut
- adjustable end of run switches
- stroke from 15 to 450
- Phytron VSS stepper motor
- closed loop option with resolver
- test and measurement in LN2

RodRail eXtreme linear translation stages are designed to run in extreme environmental conditions such as Ultra High Vacuum, radiation exposure or even cryogenic temperatures. The cage design, offered in two sizes, provides high stiffness and light weight in a narrow profile shape with several standard available lengths. This essential and reliable design matches high load capacity with sub-micron minimum incremental motion and high repeatability. Two micro switches and hard stops are freely positionable along the stroke to limit the travel range according to the application requirements. A manual knob with scale allows to move the stage manually while the motor is off. Optional double carrier improves load and movement capacity (eg. for multi axes assemblies).Cryo stages are measured in LN2. UHVS series comes standard with RGA measurement.

Via Redipuglia 8 - 20008 Bareggio (MI) - Italy. phone +39 02 90363318 www.vacuumfab.it info@vacuumfab.it

RR-Micro

RodRail eXtreme Micro series

Stroke	A	B	C
25	192	111	100
50	217	136	125
75	242	161	150
100	267	186	175
125	292	211	200
150	317	236	225
175	342	261	250
200	367	286	275
225	392	311	300
250	417	336	325
275	442	361	350
300	467	386	375
325	492	411	400
350	517	436	425
375	542	461	450
400	567	486	475
425	592	511	500
450	617	536	525

Stage code matrix

	size	carrier N.	stroke (mm)	environment	resolver CLoop
RRX	Micro	1 or 2	from 25 to 450	HV >10^-7 mbar	Res
	Nano	...	...	UHV > 10^-9 mbar	...
		...	...	UHVS <10^-9 mbar	...
				UHVC > 10^-9mbar >77°K	...

- **eg. RRX-Micro-1-200-HV = RodRail micro with 200mm stroke one carrier, for HV 10^-7 mbar**
- **eg. RRX-Nano-2—150-UHVC = RodRail nano with 150mm stroke two carriers for double load capacity, for use in cryogenic temperature and vacuum**
- **NOTE: the effective stroke is = 150mm - 62mm - x (distance set between carriers)**

MAIN SPECIFICATIONS

- **1 mm pitch lead-screw**
- **preloaded nut**
- **200 step/revolution**
- **1 um repeatability in vacuum**
- **2 freely adjustable ends of run**
- **10 N load capacity per carrier**
- **10 mm s/max speed**
- **double carrier for higher load**
- **XY and XYZ mounting option**

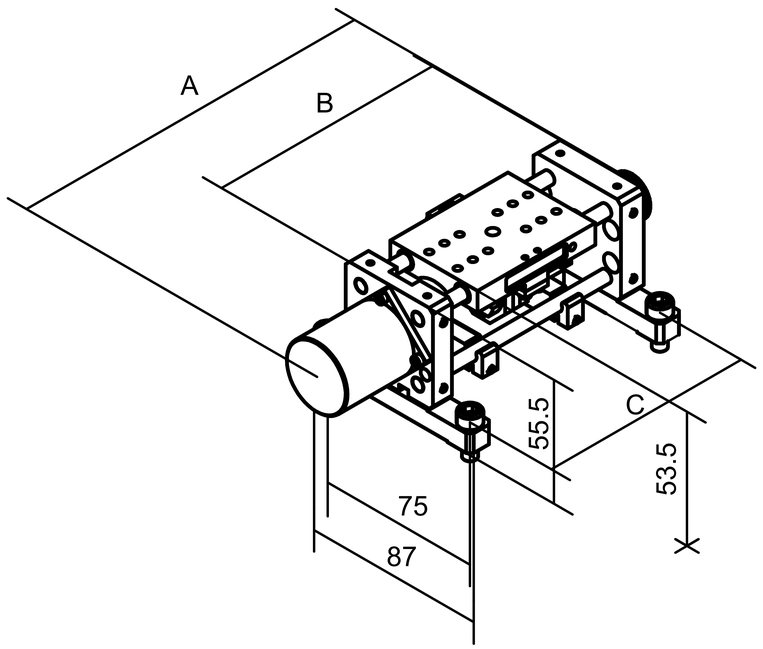

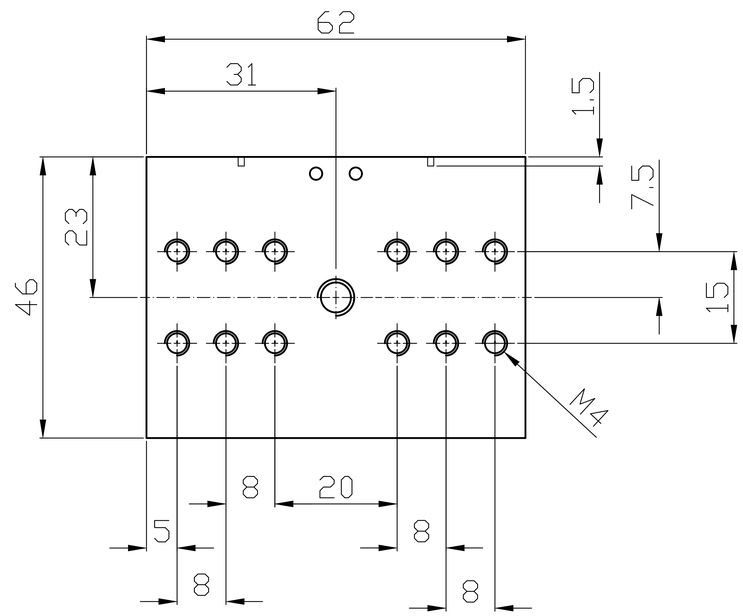

Via Redipuglia 8 - 20008 Bareggio (MI) - Italy. phone +39 02 90363318 www.vacuumfab.it info@vacuumfab.it

RR-Nano

RodRail eXtreme Nano series

Stroke	A	B	C
15	192	83	75
40	217	108	100
65	242	133	125
90	267	158	150
115	292	183	175
140	317	208	200
165	342	233	225
190	367	258	250
215	392	283	275
240	417	308	300
265	442	333	325
290	467	358	350
315	492	383	375
340	517	408	400
365	542	433	425
390	567	458	450
415	592	483	475
440	617	508	500

Stage code matrix

	size	carrier N.	stroke (mm)	environment	resolver CLoop
RRX	Micro	1 or 2	from 25 to 450	HV >10^-7 mbar	Res
	Nano	...	...	UHV > 10^-9 mbar	...
		...	...	UHVS <10^-9 mbar	...
				UHVC > 10^-9mbar >77°K	...

- **eg. RRX-Micro-1-200-HV = RodRail micro with 200mm stroke one carrier, for HV 10^-7 mbar**
- **eg. RRX-Nano-2—150-UHVC = RodRail nano with 150mm stroke two carriers for double load capacity, for use in cryogenic temperature and vacuum**
- **NOTE: the effective stroke is = 150mm - 50 mm - x (distance set between carriers)**

MAIN SPECIFICATIONS

- **0.7 mm pitch lead-screw**
- **preloaded nut**
- **200 step/revolution**
- **1 um repeatability in vacuum**
- **2 freely adjustable ends of run**
- **5 N load capacity per carrier**
- **10 mm s/max speed**
- **double carrier for higher load**
- **XY and XYZ mounting option**

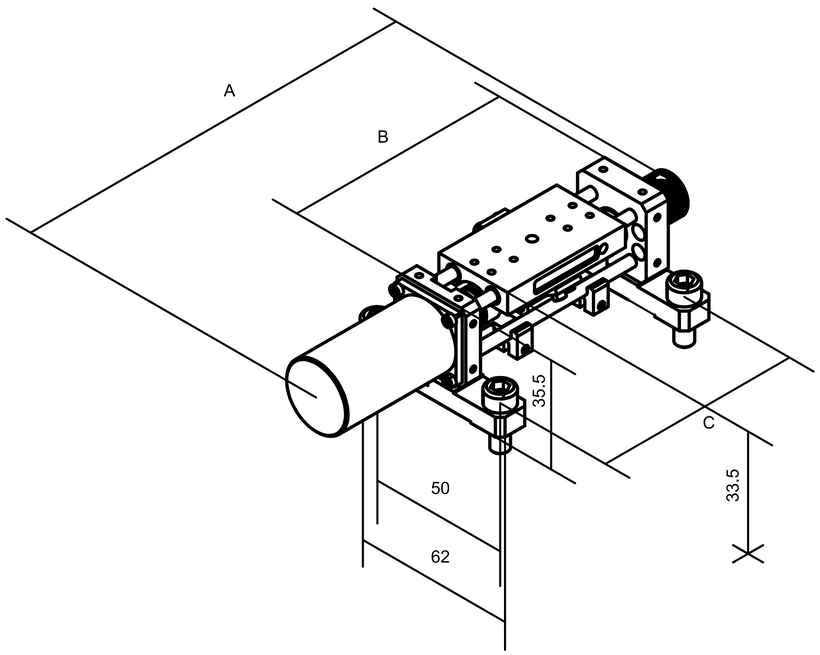

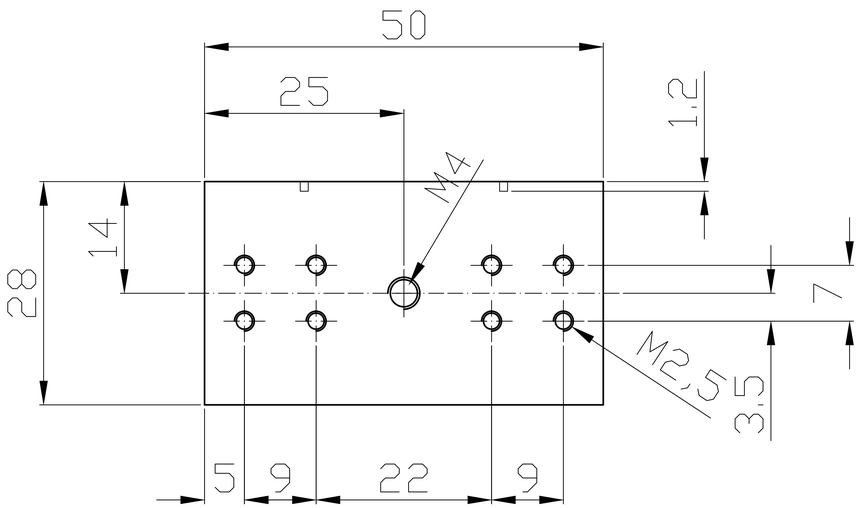

Via Redipuglia 8 - 20008 Bareggio (MI) - Italy. phone +39 02 90363318 www.vacuumfab.it info@vacuumfab.it

Questionnaire

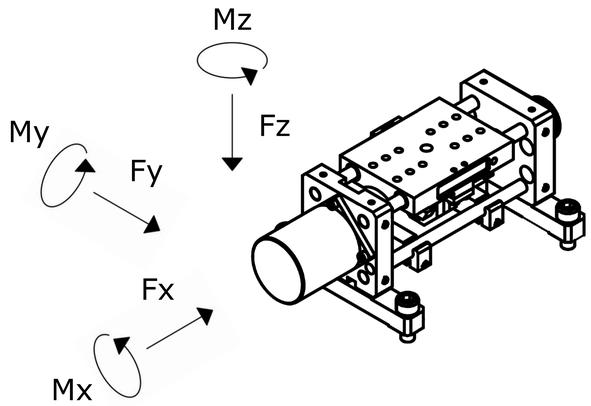

Fill in this questionnaire and mail it to ufficiovendite@vacuumfab.it to get our consultancy for the positioning system design, free of charges:

CUSTOMER'S REFERENCE

Name, surname: Institute/company:
Phone Number: Email:

WEIGHT/SPECIMEN INFORMATION

Dimensions (mm): lenght width height
Shape: (description or better attach drawing)
Weight (g):
Center of gravity coordinates from the center of the carrier (mm): X Y Z

Notes:

POSITIONING REQUIREMENT

Travel range required (mm):
Positioning resolution required (µm):
Repeatability required (µm): ☐ uni-directional ☐ bi-directional
Applied force (N): Fx Fy Fz
Applied Moment (Nm): Mx My Mz
Speed required (mm/s):
Acceleration required (mm/s²):
Duty Cycle:
Other degrees of freedom required: please specify and possibly add a sketch and a description f the application

WIRING REQUIREMENT

Cable lenght in air from the mechanics to the controller (m):

CONTROLLER REQUIREMENT

Motion control type: ☐ point to point ☐ linear interpolation ☐ contouring
Positioning application type: ☐ high resolution ☐ high repeatability
Computer connection port: ☐ Ethernet ☐ USB ☐ other (specify)
Software compatibility: ☐ DLL ☐ LabVIEW ☐ EPICS ☐ TANGO

Notes:

Date and signature:

Via Redipuglia 8 - 20008 Bareggio (MI) - Italy. phone +39 02 90363318 www.vacuumfab.it info@vacuumfab.it