NOVAL
HOME AUTOMATION

English

CREATING MOVEMENT

Designed and made in France

CONTENT

P04 ABOUT NOVAL

P06 SUN PROTECTION

P08 Sliding shutter
P14 Sliding folding shutter
P18 Folding shutter
P22 Folding sunshade
P28 Tilting sunshade
P32 Bioclimatic pergola

P42 MOTORISED WINDOWS

P44 Sliding window
P48 Minimalist sliding window
P52 Louver motorization

P54 INTERIOR FITTINGS

P56 Vertically-moving screen
P58 Screen from the ceiling
P59 Worktop screen
P62 Telescopic table leg

P67 SPECIFIC INSTALLATIONS

P84 OEM

Cover design: Matthieu Plante
Opposite: Noval

NOVAL

ABOUT NOVAL

NOVAL is active in the design and manufacturing of innovative products in the Mechatronics field. NOVAL relies upon the abilities of our Electronic and Mechanic design offices as well as our production unit to offer clients a comprehensive solution, from study to prototype to series production of the product.

Combines a range of products dedicated to the **outdoor advertising and mobility market** including scrolling poster displays, LED lighting solutions, renewable energy power solutions and remote management systems for deployed scrollers and bike share stations.

Brings together solutions designed for **homes and buildings** such as motor systems for swimming pools, sliding windows, as well as access and control systems and a wide range of mechatronic solutions for home interiors, buildings and leisure.

Regroups **products for Yachting** such as sliding sunroofs, swim ladders, TV-lift and companionways. NOVAL also designs custom solutions for prestigious customers.

Credit: DR

STUDIES

MECHANIC DESIGN

- 3D design (SolidWorks)
- Excellent cinematic skills
- Wide-ranging knowledge of technological processes

ELECTRONIC DESIGN

- Motor drive and control (CC, Brushless, etc.)
- Radio communication, GSM, GPRS
- LED technology integration
- Autonomous energy management

SOFTWARE STUDIES

Embedded software (C++, Assembler, Java, Python, etc.)

- System: Linux, Apache, MySal
- Tools: Eclipse, SVN, CVS
- Communication protocols

PROTOTYPING

- Machining
- 3D printer
- Qualification tests

PURCHASING

SOURCING

- International sourcing (global network of 150 partners)
- Purchasing negotiation
- Volume consolidation

SUPPLY MANAGEMENT

- Management of more than 3000 references
- Acceptance and control

PRODUCTION

MANUFACTURING

- Methods
- Production management
- Quality control
- Electronic board manufacturing (subsidiary AAE)
- 2500m² assembly plant divided into autonomous production units

LOGISTICS

- International logistics
- Optimisation of packaging and flows

Credit: Matthieu Plante

SUN PROTECTION

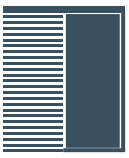

P08 SLIDING SHUTTER

P14 SLIDING FOLDING SHUTTER

P18 FOLDING SHUTTER

P22 FOLDING SUNSHADE

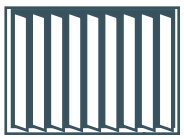

P28 TILTING SUNSHADE

P32 BIOCLIMATIC PERGOLA

Credit:Matthieu Plante

SLIDING SHUTTER

Motorised rail system

Motorised rail for sliding shutter, custom-built and ready to fit.

Credit:Matthieu Plante

INTRODUCTION

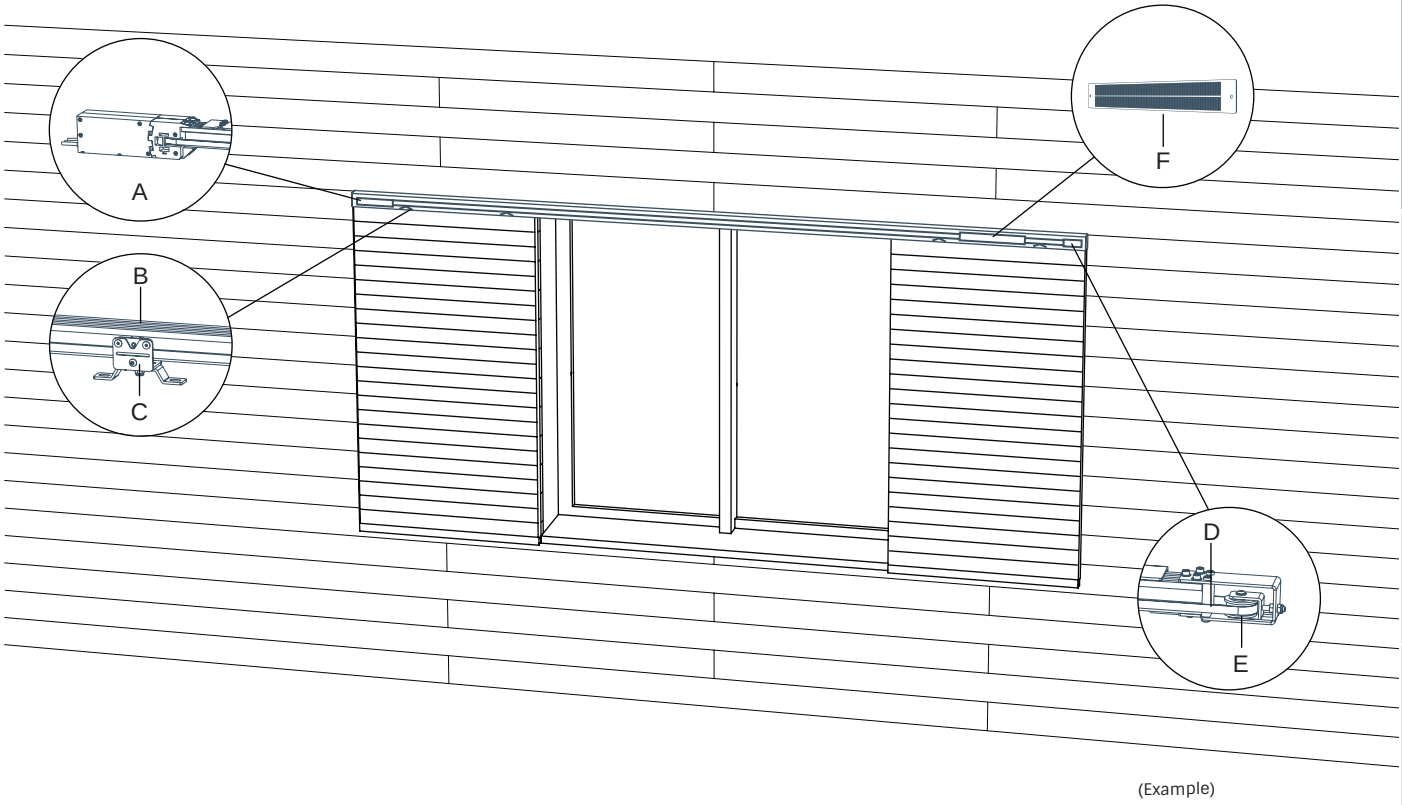

(Example)

A 12V motor unit
B Aluminium slide rail
C Drive carriage with fastening hoop on leaf
D Drive belt
E Guide pulley
F Solar panel

BENEFITS

- Comfort and ease of use
- Increased energy efficiency of the building
- Management of sunlight heat input
- Compatible with all types of shutters (wood, alu, PVC)
- Integrated motorisation of the slide rail

SPECIFICATIONS

- Up to 80kg per leaf
- Can be adapted to different shutter widths
- Anti-pinch safety device
- Acceleration and slowing phase
- Simple operation by radio-control or wired switch
- Compatible with centralised building management systems, building management systems and home automation systems
- Electrical locking as an option
- Optional solar power supply

Delivered ready to fit!

Custom-built!

Efficient!

SLIDING SHUTTER

DIMENSIONS

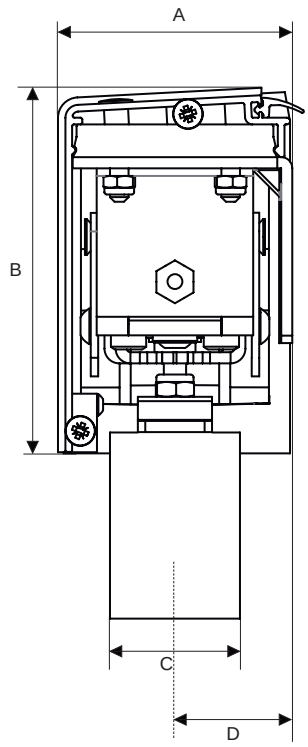

Overall dimensions of motorised rail	
A: Cover width	63.1mm
B: Cover height	98.3mm
C: Shutter width	20 to 35mm
D: Distance from shutter axis to the wall	32mm

Overall dimensions of motorised rail and leaf	
E: Cover width for 1 leaf	1.2 to 6m
F: Shutter width for 1 leaf	600 to 3000mm
E: Cover width for 2 leaves	2.4 to 6m
H: Shutter height	300mm max.
I: Shutter width for 2 leaves	600 to 1500mm

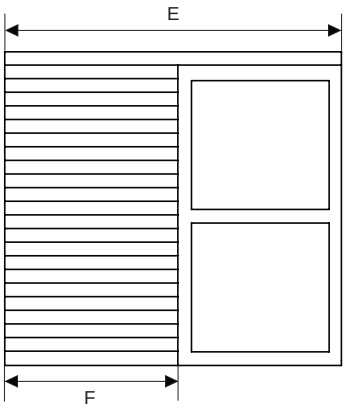

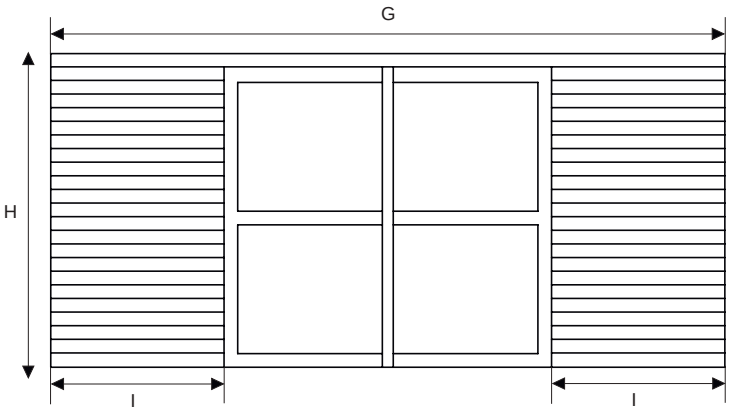

CONFIGURATIONS

1 leaf	
2 leaves	
1 leaf with electric lock	
2 leaves with electric lock	

Manual rail solutions also available

ELECTRICAL CONNECTION

CONTROL AND POWER SUPPLY

Operation by radio control

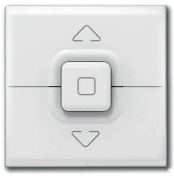

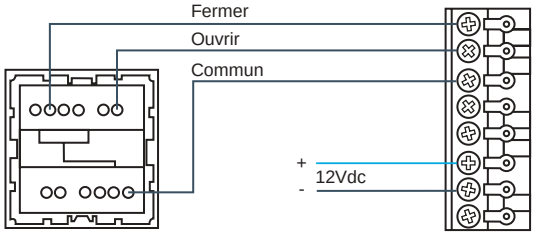

Operation by wired control

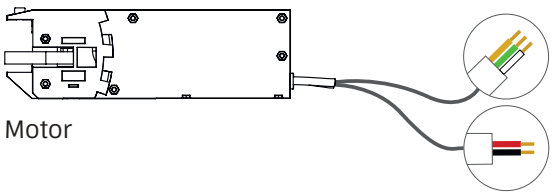

Motor

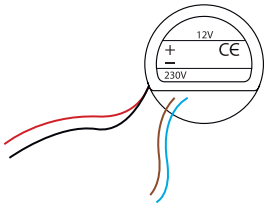

Flush-fitted built-in power supply unit
230V-50Hz

CENTRALISED/HOME AUTOMATION MANAGEMENT INTEGRATION

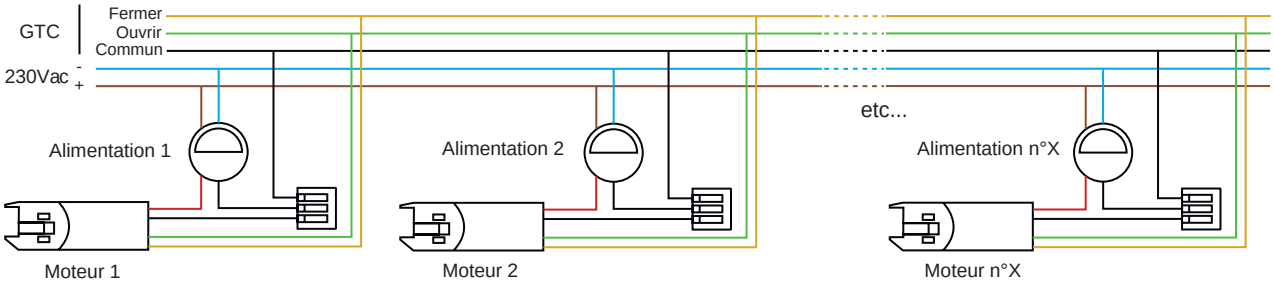

FITTING TYPES

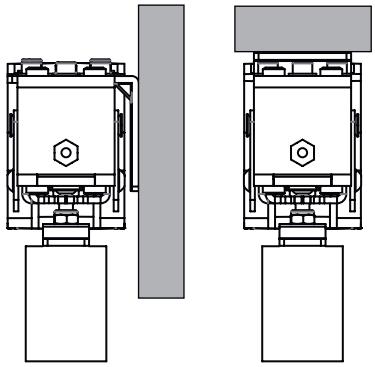

surface mounting

mounting under lintel

COVERS

COLOURS (aluminium profile + caps)

The colour of standard profiles and caps can be chosen from 3 finishes (other colours available on request):

RAL9005 RAL9010 RAL7016

OFFSET MOTORISATION

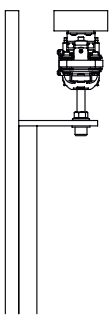

Offset motorisation enables better integration in the facade by preserving the continuity between panels.

ACHIEVEMENTS

Left page: Departmental archives of Seine-Saint-Denis in Bobigny (French department 93). Architect: Chartier d'Alix Architectes. Mounting under lintel of 31 motorised leaves and a manual leaf with integration concealed behind the facade.

Above: Agricultural secondary school in Ste-Gemme-La-Plaine (French department 85). The 150 sliding shutters for the boarding school, clad with wooden weatherboarding, are operated simultaneously in groups using a centralised control from the supervisors' office.

Opposite: 46 Rue de la Pompe in Paris (75016)
Architect: HARDEL + LE BIHAN. 81 apartments with motorised rails for sliding shutters on stone facade.

Our sliding shutter has also been adapted and modified for specific architectural projects such as the General Council of Haute Garonne and the head office of La Poste. For more information about these installations, **see p73**

SLIDING FOLDING SHUTTER

Motorised rail system

Motorised rail for sliding folding shutter custom-built and ready to fit.

INTRODUCTION

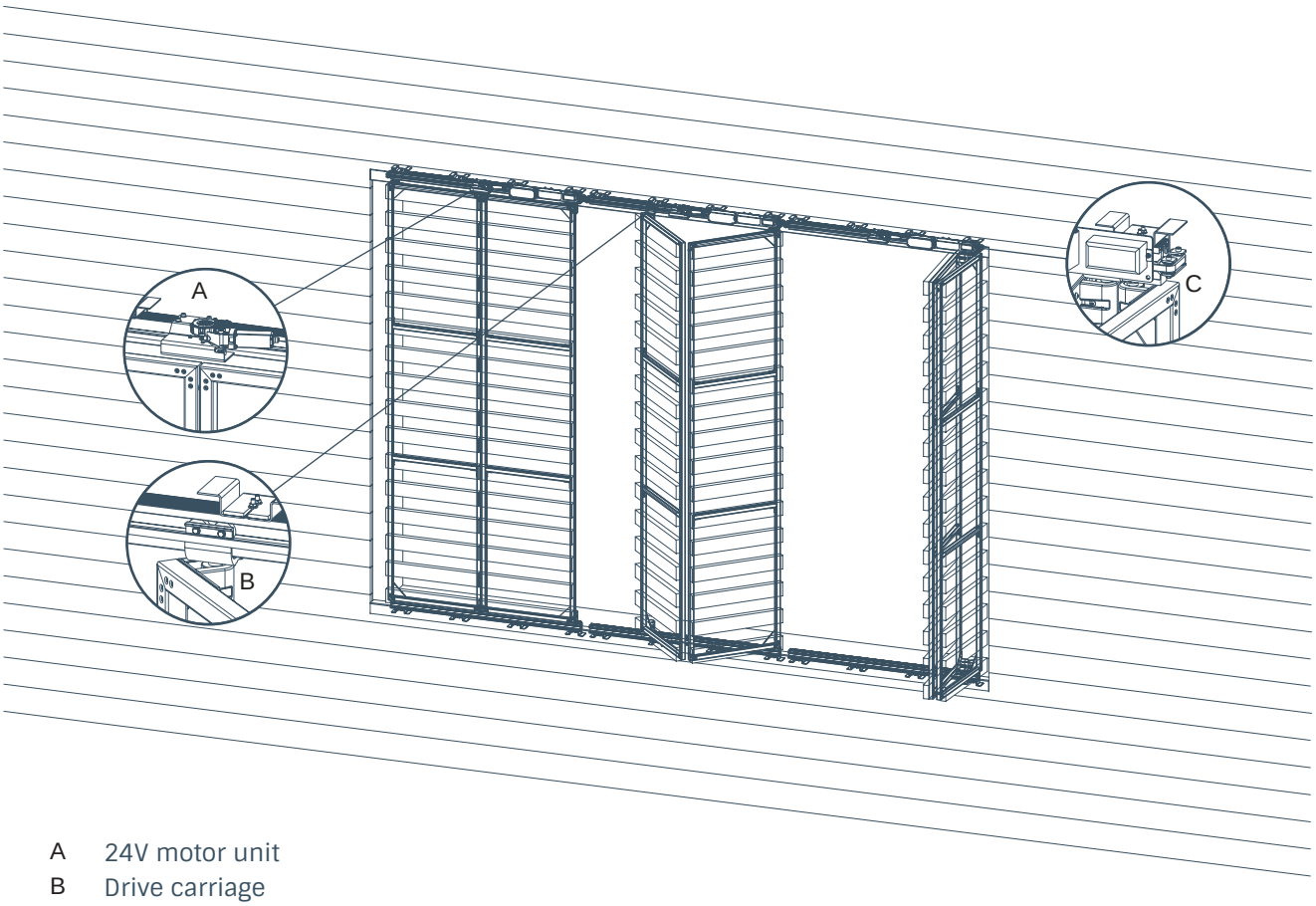

A 24V motor unit
B Drive carriage
C Guide pulley

(Example)

BENEFITS

- Comfort and ease of use
- Compatible with all types of shutters (wood, alu, PVC)
- Integrated motorisation of the slide rail
- Anti-intrusion: automatic resistance to attempts to force open the shutters
- Reduced space required in all positions

SPECIFICATIONS

- Up to 80kg for example
- Can be adapted to different shutter widths
- Anti-pinch safety device
- Acceleration and slowing phase
- Simple operation by radio-control or wired switch
- Compatible with On-or-off systems, centralised building management systems, building management systems and home automation systems

Delivered ready to fit!

Custom-built!

Anti-intrusion!

SLIDING FOLDING SHUTTER

DIMENSIONS

Overall dimensions	
W: Overall width	90 < W < 1600mm
H: Overall height	800 < W < 3000mm
Surface (W x H)	W x H < 4.5m²

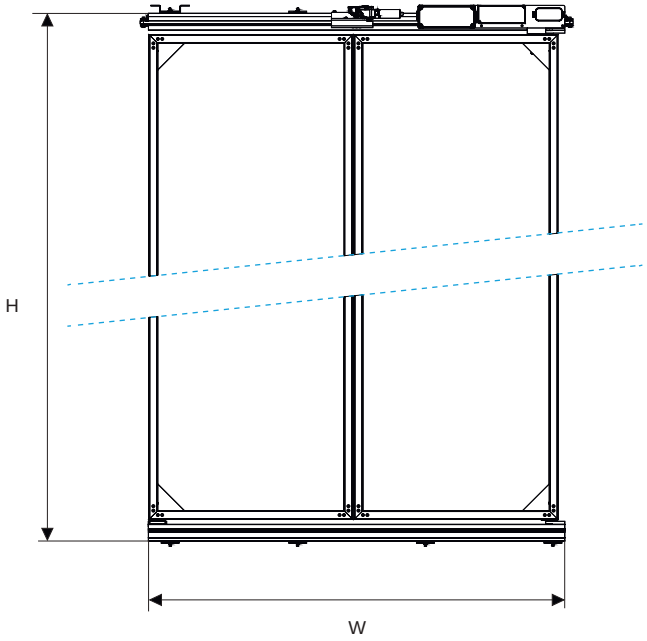

SHUTTER

The motor drive can be delivered on its own or with a frame ready for the installation of panels.
The customer provides the panels.

EXAMPLES OF PANELS

Painted aluminium sheet

Perforated aluminium sheet

Wooden panel

WEIGHT OF PANELS

Max. 35kg per leaf if 2 leaves

Max.17kg per leaf if 4 leaves

SPECIFICATIONS OF THE FRAME FOR PANEL FASTENING

Peripheral aluminium frame, dimensions 30x30mm, thickness 2mm.

Can be fastened on front face, outside or inside faces except corners (60mm).

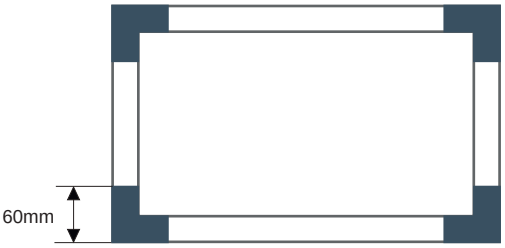

CONFIGURATIONS

CONFIGURATION TYPES

2 leaves

4 leaves

4 leaves

ELECTRICAL CONNECTION

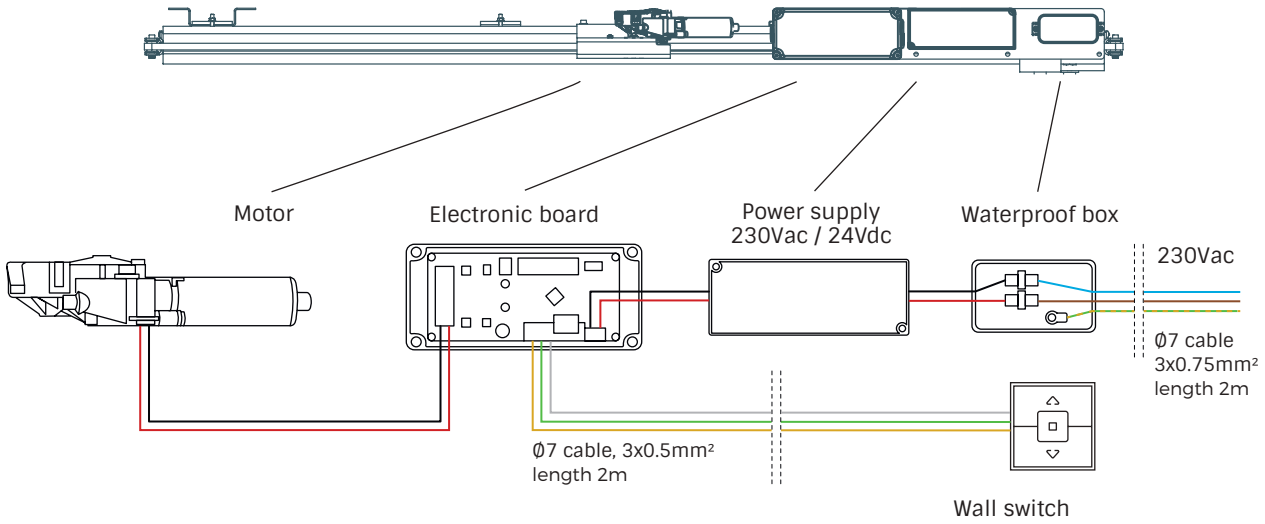

OPERATION

- On-or-off contact for operation by wired switch, centralised management system, home automation
- Radio control also possible by connecting a radio receiver
- Cable length: 2m
- Cable: diameter 5mm / 3 x 0.5mm²

POWER SUPPLY

- Power supply 230VAC – 50Hz
- Cable length: 2m
- Cable: diameter 7mm / 3 x 0.75mm²

FITTING TYPES

MOUNTING TYPES

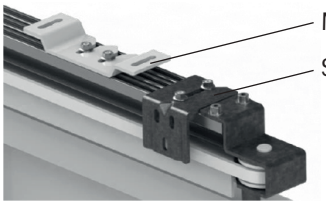

LACQUERING

SHUTTER COLOUR OPTIONS

- Thermo-lacquering is a standard option.
- Choice of shade from standard RAL range.
- Choice of finish (gloss, satin or matt)

HINGE COLOUR OPTIONS

Hinges are available in 3 colours:

- RAL9005 Satin finish
- RAL9016 Satin finish
- RAL7016 Satin finish

FOLDING SHUTTER

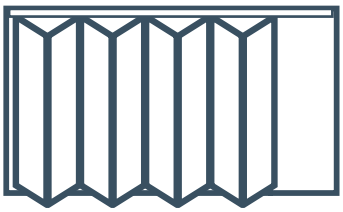

Frame for folding shutters, custom-built and ready to fit.

INTRODUCTION

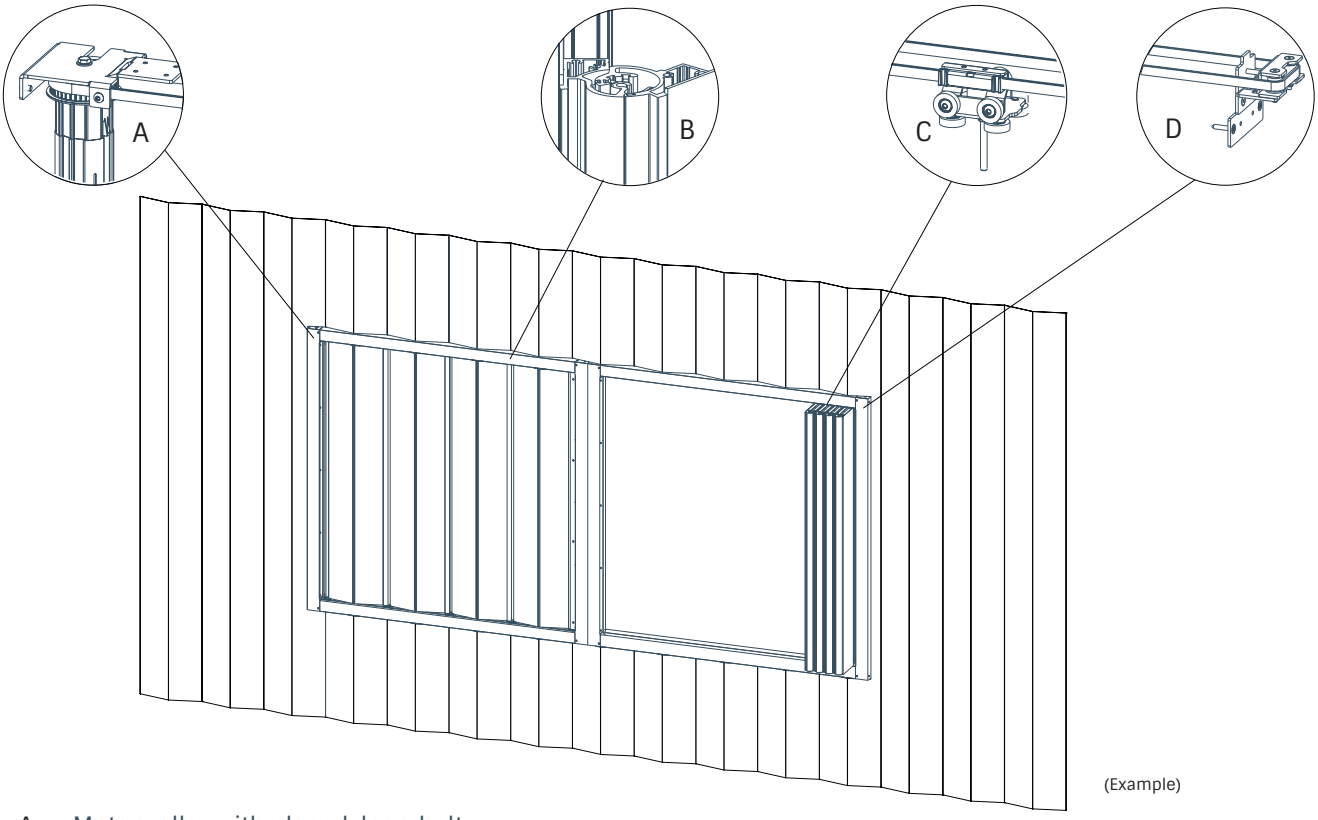

(Example)

A Motor roller with closed-loop belt
B Hinge
C Sliding carriage
D Guide pulley

CONFIGURATIONS

Lateral opening

• System with 2, 4, 6, 8, 10, 12, 14 or 16 lateral leaves

Central opening

• System with 4, 8, 12 or 16 symmetrical leaves

BENEFITS

• Comfort and ease of use
• Brightens up the facade
• Concealed hinges
• Anti-intrusion: automatic resistance to attempts to force open the shutters
• Discreet motorisation built into the frame

SPECIFICATIONS

• Up to 20kg per leaf
• Can be adapted to different shutter widths
• Frame compatible with several types of panel (aluminium, wood, unrolled metal, etc.)
• Operated by push button, radio remote control or centralised management system
• Multiple possible configurations

Delivered ready to fit!

Custom-built!

Anti-intrusion!

FOLDING SHUTTER

DIMENSIONS

Overall dimensions	
W: Overall width	600 mm < W < 4000 mm
H: Overall height	920 mm < H < 3000 mm
Surface (W x H)	W x H < 8m²

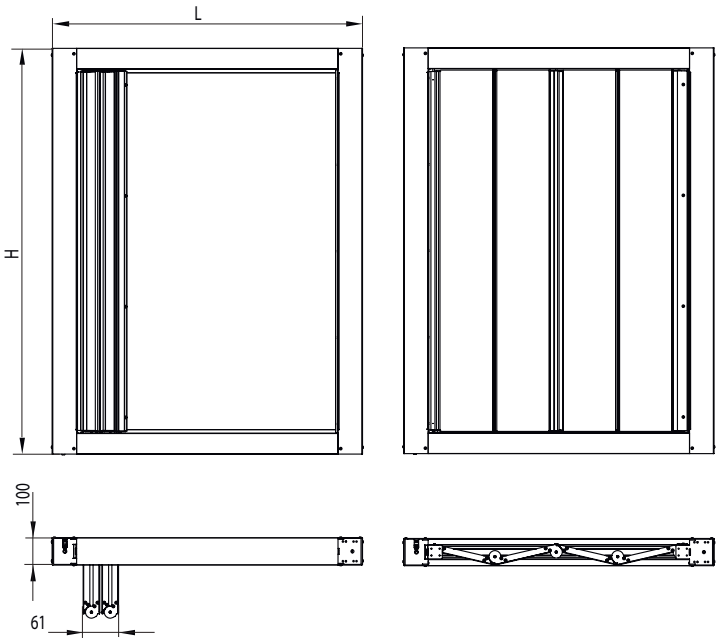

SHUTTER

The panels can be supplied and fitted either by ourselves or by the customer.

EXAMPLES OF PANELS

Painted aluminium sheet

Perforated aluminium sheet

Wooden panel

WEIGHT OF PANELS

Max 20kg per leaf

SPECIFICATIONS OF THE FRAME FOR PANEL FASTENING

Leaf frame formed by 2 aluminium profiles acting as a hinge, and 2 sheets connecting these 2 profiles.

Can be fastened on the front face or inside face of the hinge profiles

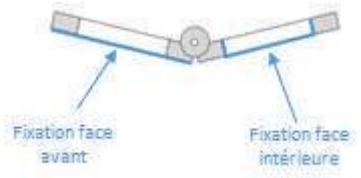

LACQUERING

FOLDING SHUTTER COLOUR OPTIONS

- Thermo-lacquering is a standard option.
- Choice of shade from standard RAL range.
- Choice of finish (gloss, satin or matt)
- Please ask us about other finishes and colours.

MOTORISATION CONTROL

OPERATION

- No access to moving parts from inside and outside: Wired or radio control motor
- Parts can be accessed from inside and outside: Wired control motor

POWER SUPPLY

- Power supply 230VAC – 50Hz
- Cable exit on left, right or rear of the system
- Cable length: 2.5m
- Cable diameter: 7mm

CONTROL

- Cabling of wired control motor

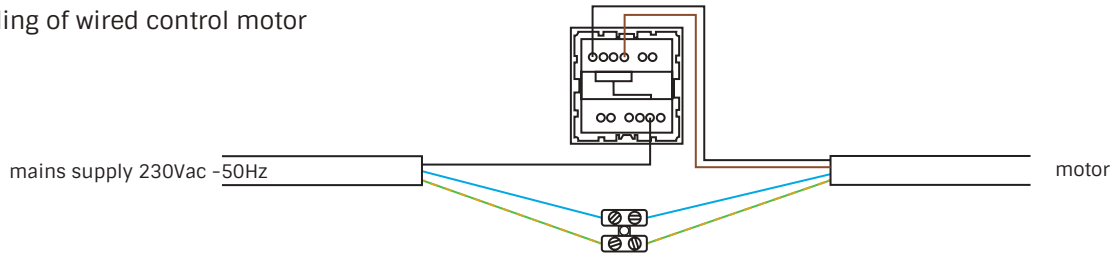

- Cabling of radio control motor

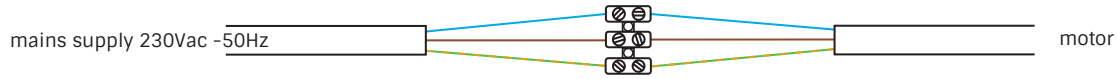

CONTROL OPTIONS

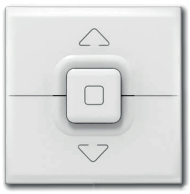

Switch for wired control

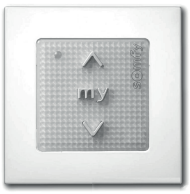

Switch for radio control

A variety of models of switches and remote controls are available. Please ask for more information.

MOUNTING AND FASTENINGS

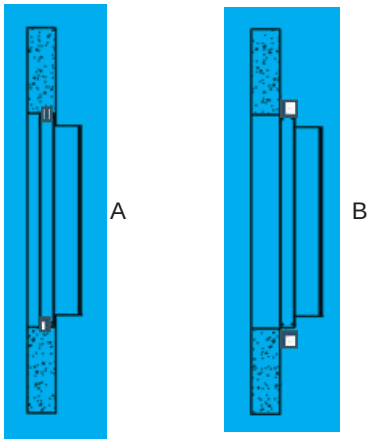

A: MOUNTING IN REVEAL

The fastening holes must be made in the top and bottom rails of the system.

B: SURFACE MOUNTING

Fitted using fastening brackets (not supplied) appropriate to the surface.

Credit:Mathieu Plante

FOLDING SUNSHADE

Frame for folding sunshades, custom-built and ready to fit.

Credit:Noval

INTRODUCTION

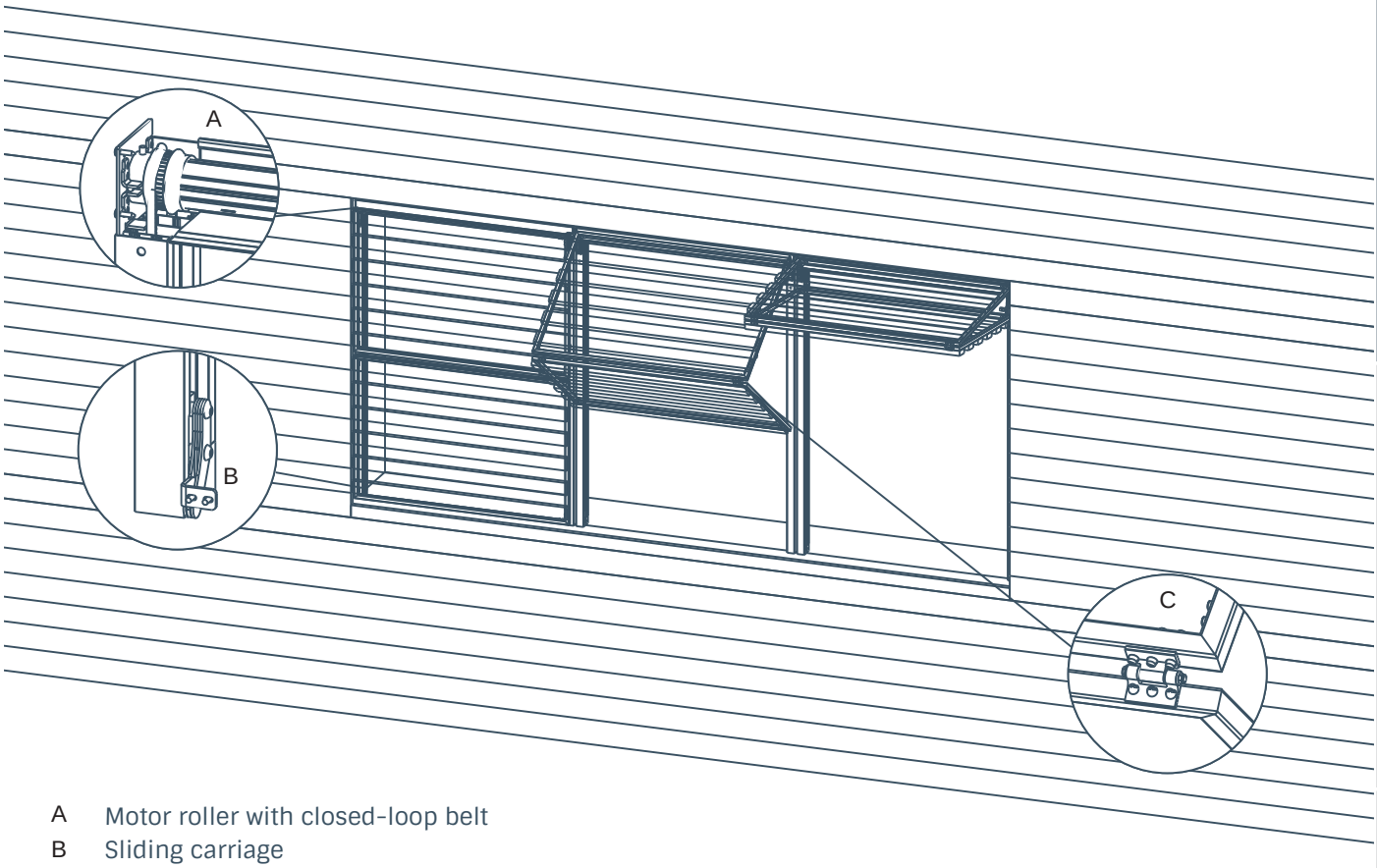

A Motor roller with closed-loop belt
B Sliding carriage
C Hinge and panels

(Example)

MANAGEMENT OF HEAT INPUT FROM SUNLIGHT

In summer, in the raised position, the sunshade blocks direct rays from the sun, thereby avoiding significant heat input, while retaining an unobstructed view outside and high natural light levels.

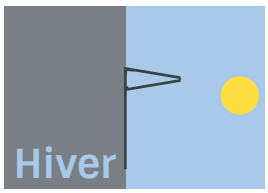

In winter, in the raised position, the sunshade maximises natural sunlight inside the building, optimises heat input and retains an unobstructed view outside.

BENEFITS

- Helps manage the building's heat input from sunlight
- Brightens up the facade
- Creates a uniform facade appearance in closed position
- Discreet integrated motorisation

SPECIFICATIONS

- Frames compatible with several types of panels (aluminium, wood, unrolled metal, etc.)
- Operated by push button, radio remote control or centralised management system

Delivered ready to fit!

Custom-built!

Efficient!

FOLDING SUNSHADE

DIMENSIONS

Overall dimensions		
/	Standard version	XL version
Width	880mm ≤ W ≤ 3000mm	1100mm ≤ W ≤ 4000mm
Height	800mm ≤ H ≤ 3000mm	1000mm ≤ H ≤ 4000mm
Surface area	W x H ≤ 4,5m²	W x H ≤ 12m²

Dimensions of the opening	
Wopen	L-110mm
Hopen	H-350mm

Dimensions of opening frames	
Wframe	W - 20mm
Hframe	(H - 130)/2

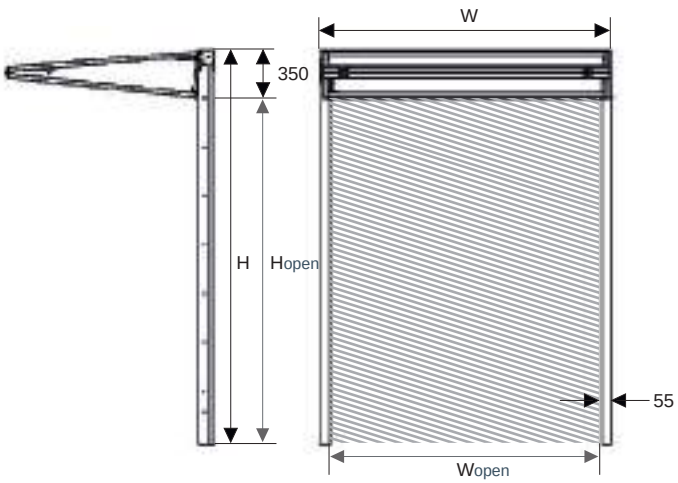

PANELS

The customer supplies and fits the panels.

EXAMPLES OF PANELS

Solid aluminium sheet

Perforated aluminium sheet

Wooden panel

WEIGHT OF PANELS

Maximum weight standard version	Maximum weight XL version
70kg	140kg

SPECIFICATIONS OF THE FRAME FOR PANEL FASTENING

Peripheral aluminium frame, dimensions 30x30mm for the standard version and 40x40mm for the XL version. Can be fastened on front face, outside or inside faces except corners (60mm).

Panels cannot be fastened to the areas indicated in blue.

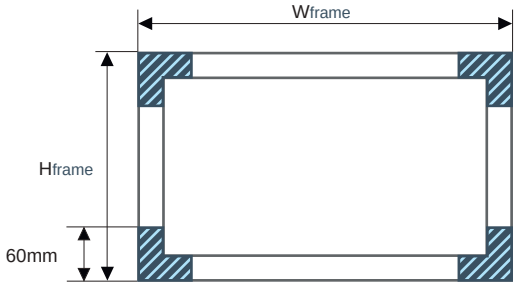

SHUTTER COLOUR OPTIONS

- Thermo-lacquering is a standard option.
- Choice of shade from standard RAL range.
- Choice of finish (gloss, satin or matt).
- Please ask us about other finishes and colours.

HINGE COLOUR OPTIONS

The colour of upper and intermediate hinges is chosen from these colours:

- RAL9005 Satin finish
- RAL9016 Satin finish
- RAL7016 Satin finish

MOTORISATION CONTROL

OPERATION

- No access to moving parts from inside and outside: Wired or radio control motor
- Parts can be accessed from inside and outside: Wired control motor

POWER SUPPLY

- Power supply 230VAC – 50Hz
- Cable exit on left, right or rear of the system
- Cable length: 2.5m
- Cable diameter: 7mm

CONTROL

- Cabling of wired control motor

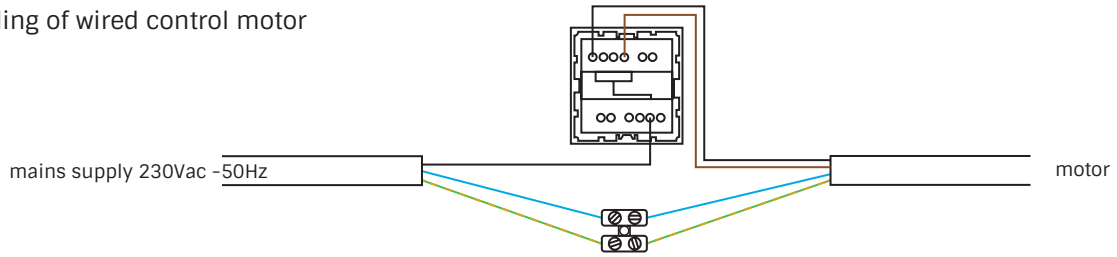

- Cabling of radio control motor

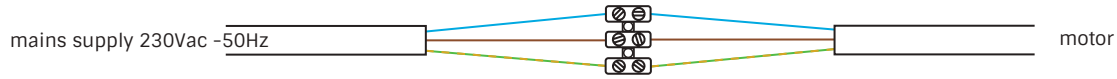

CONTROL OPTIONS

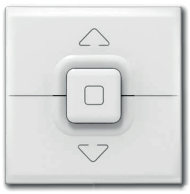

Switch for wired control

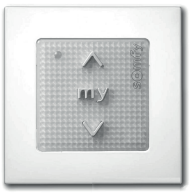

Switch for radio control

A variety of models of switches and remote controls are available. Please ask for more information.

MOUNTING AND FASTENINGS

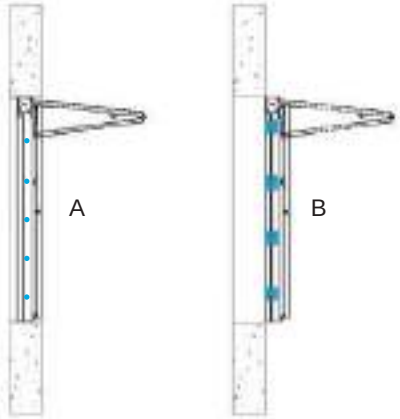

A: MOUNTING IN REVEAL

The fastening holes must be made in the uprights of the system.

B: SURFACE MOUNTING

Fitted using fastening brackets (not supplied) appropriate to the surface.

FOLDING
SUNSHADE

ACHIEVEMENTS

Left page: Rowing base of the Saint Cassien lake.

Above: Food shop in Paris Gambetta

Opposite: Local shop of the Vintrou's mairie.

Our sunshade has also been adapted and modified for specific architectural projects such as 10 Grenelle building and schools in Montévrain.
For more information about these installations, **see p76**

TILTING SUNSHADE

Motorisation mechanism for tilting sunshades custom-built and ready to fit.

Photo credits: Matthieu Plante

INTRODUCTION

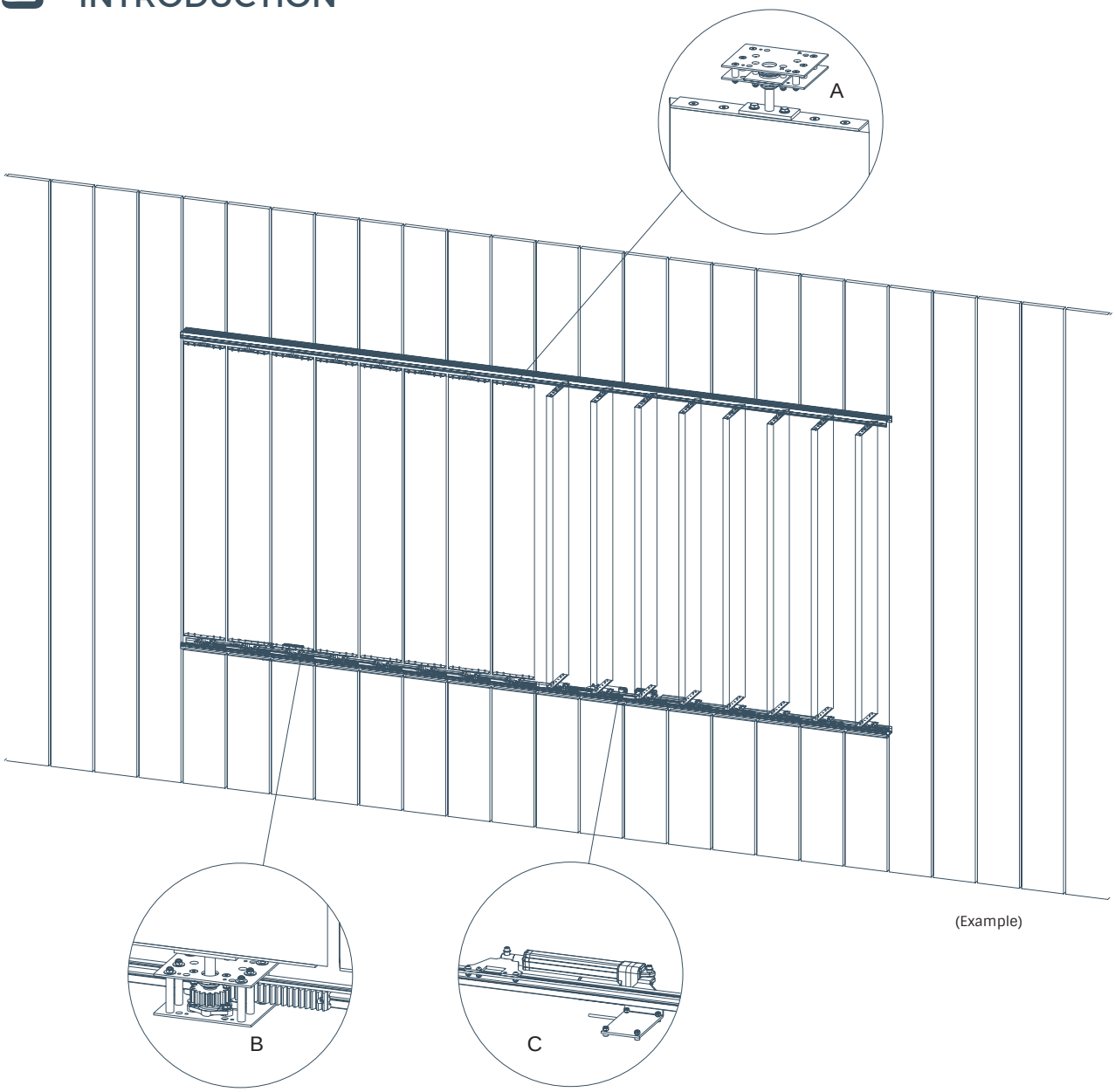

A Upper assembly for rotation and suspension of blades
B Lower assembly for rotation of blades and rack drive
C Electric actuator

BENEFITS

- Helps manage the building's heat input from sunlight
- Brightens up the facade
- Creates a uniform facade appearance in closed position
- Discreet integrated motorisation

SPECIFICATIONS

- Frames compatible with several types of panels (aluminium, wood, unrolled metal, etc.)
- Operated by push button, radio remote control or centralised management system

Delivered ready to fit!

Custom-built!

Efficient!

TILTING SUNSHADE

DIMENSIONS

Overall dimensions	
W: width	1.5m < W < 6m
H: height	H < 4m
w: blade width	250mm < w < 700mm
Number of blades	20 max.

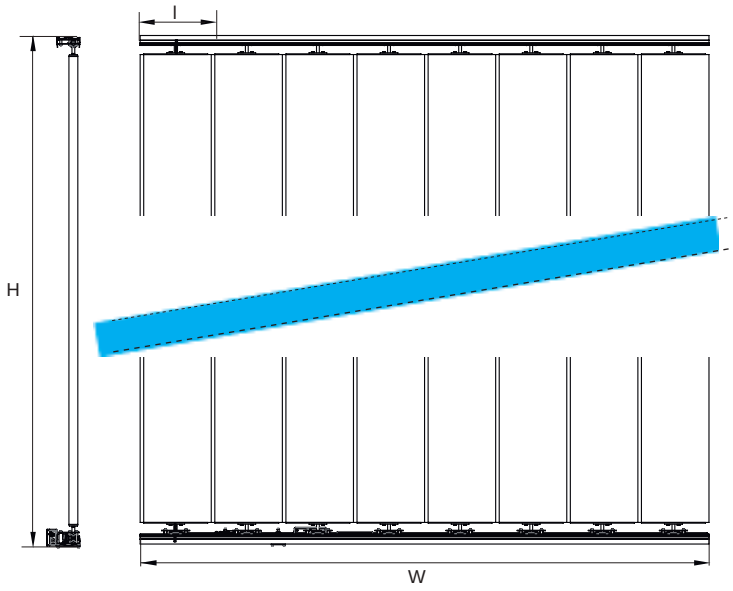

SLATS

The motor drive can be delivered on its own or with a frame ready for the installation of panels.
The customer provides the panels.

EXAMPLES OF PANELS

Painted aluminium sheet

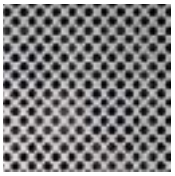

Perforated aluminium sheet

Wooden panel

SPECIFICATIONS OF THE FRAME FOR PANEL FASTENING

Peripheral aluminium frame, dimensions 30x30mm, thickness 2mm. Can be fastened on front face, outside or inside faces except corners (60mm).

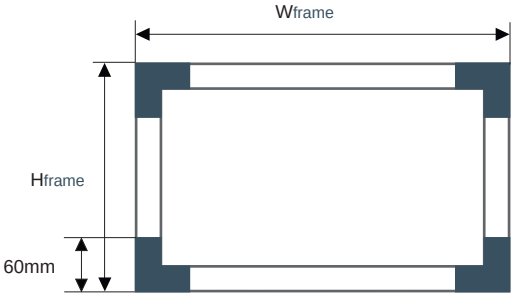

Panels cannot be fastened to the areas indicated in blue.

SHUTTER COLOUR OPTIONS

- Thermo-lacquering is a standard option.
- Choice of shade from standard RAL range.
- Choice of finish (gloss, satin or matt).
- Please ask us about other finishes and colours.

ELECTRICAL CONNECTION

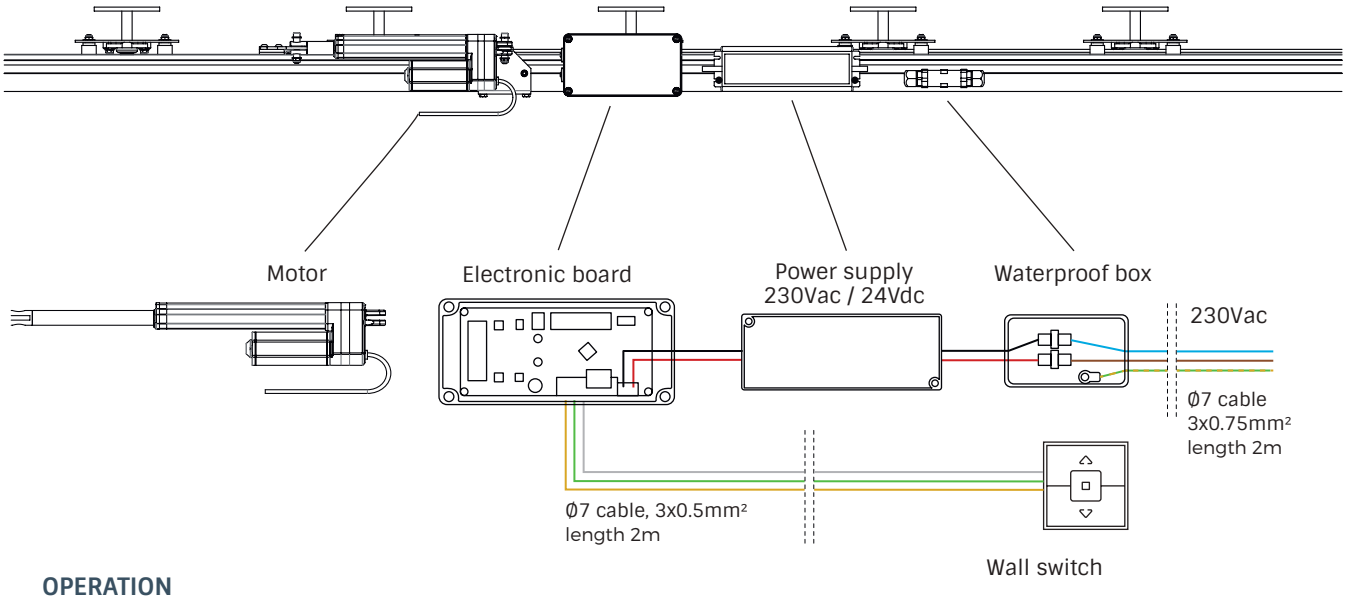

OPERATION

- On-or-off contact for operation by wired switch, centralised management system, home automation
- Radio control also possible by connecting a radio receiver
- Cable length: 2m
- Cable: diameter 5mm / 3 x 0.5mm²

POWER SUPPLY

- Power supply 230VAC – 50Hz
- Cable length: 2m
- Cable: diameter 7mm / 3 x 0.75mm²

CONTROL OPTIONS

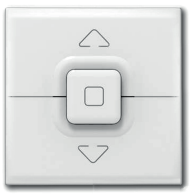

Switch for wired control

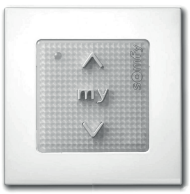

Switch for radio control

A variety of models of switches and remote controls are available. Please ask for more information.

FITTING TYPES

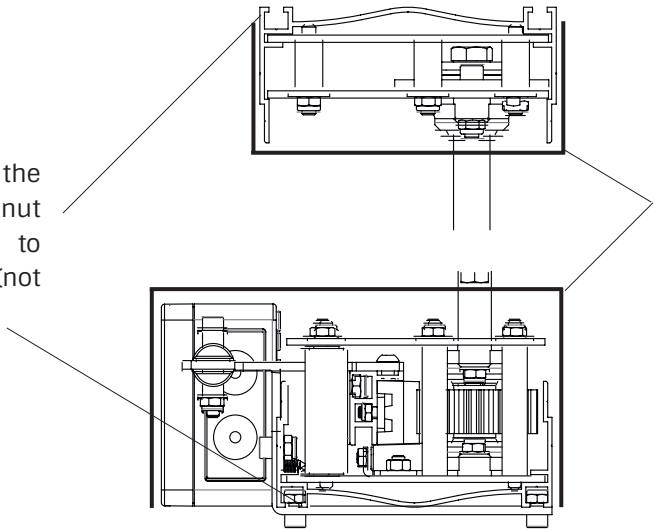

Grooves for the bracket fastening nut or plate specific to each installation (not supplied).

Finishing sheets to be fitted by the facade specialist.

BIOCLIMATIC PERGOLA

Control unit

This solution optimises the comfort and security of bioclimatic pergolas with tilting blades.

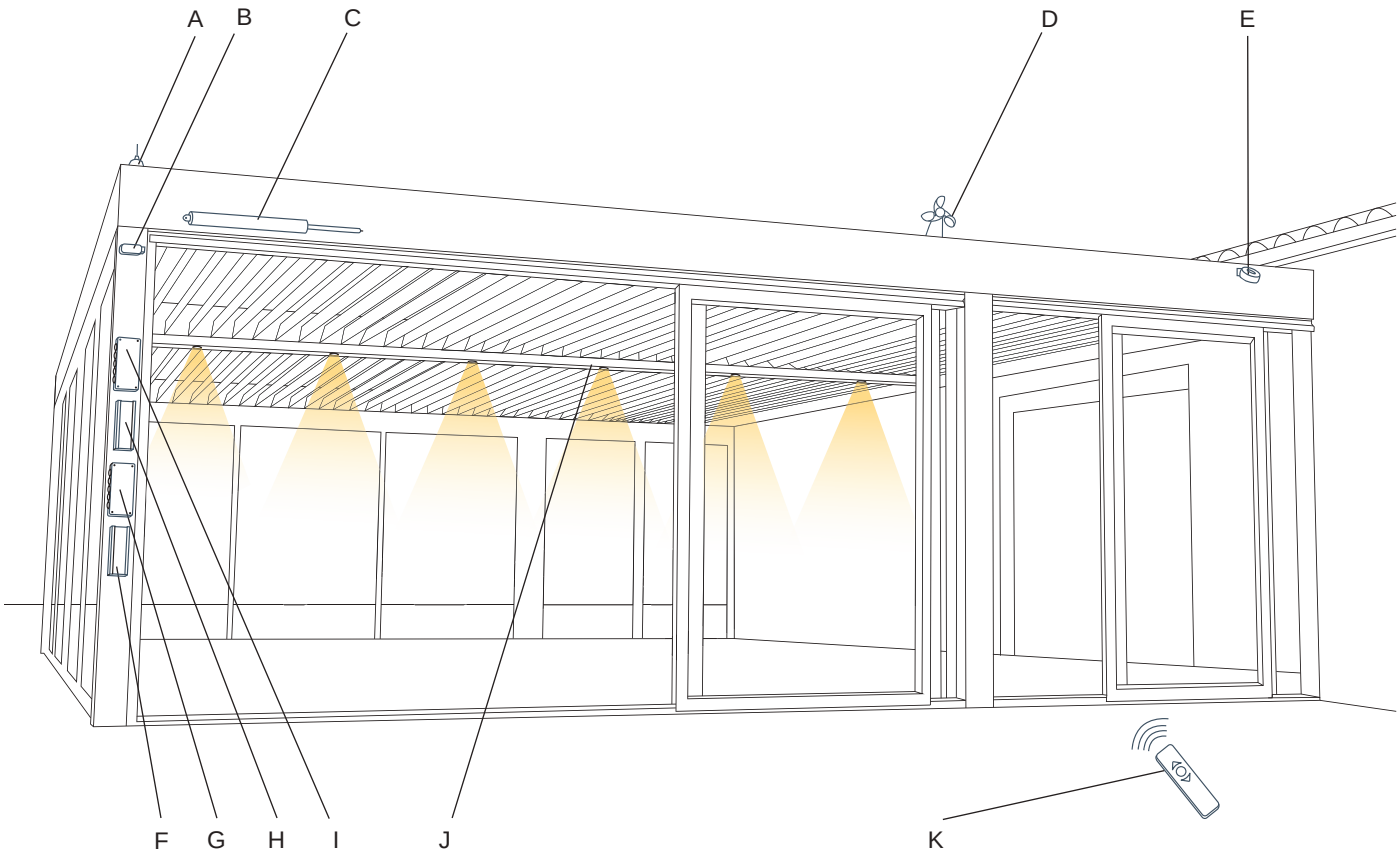

A Radio aerial
B Temperature sensor
C Electric actuator
D Anemometer
E Rain sensor
F Power supply to motor management unit
G Motor management unit
H Power supply to lighting management unit
I LED lighting management unit
J LED lighting
K Radio remote control

BIOCLIMATIC OPERATION

Manual mode

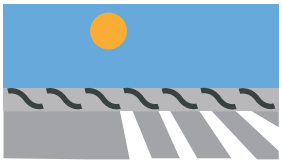

In sunshine:
The user tilts the blades using the remote control to adjust light or shade and heat input from sunlight.

Automatic mode

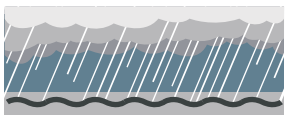

In rain:
The blades close automatically to protect the covered space.

In wind:
The blades are positioned automatically to reduce pressure stresses.

In frost:
The blades half-open automatically to protect the seals.

In snow:
Choice of response made at installation to protect the pergola or the covered space in the event of snow.

SPECIFICATIONS

Control unit
- Control of 1 to 3 actuators
- Lighting control, white and/or RGB LED
- Control of accessories (heating, etc.).

Radio control
- Unit and sensors compatible with all SOMFY® RTS control points

Compatibility
- With centralised building management systems, building management systems, radio and Home Automation systems

OUR RANGE OF CONTROL UNITS

100W COMPACT BOX

This is an all-in-one product to control up to three actuators and LED lighting with power supply built into a single sealed box.

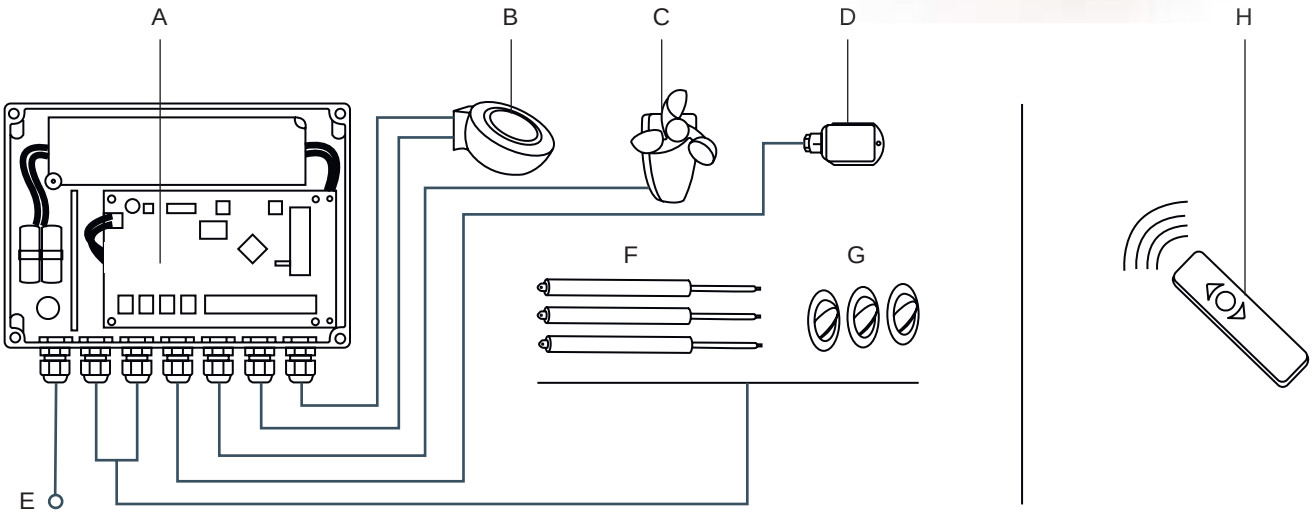

- A Box with internal power supply, max. 100W
- B Rain sensor (optional)
- C Wired or RTS anemometer (optional)
- D Temperature sensor (optional)
- E Mains supply 110-230VAC 50/60Hz
- F Actuator output
- G LED output
- H Radio remote control (optional)

Reference	Power supply	Outputs	Wired inputs	Radio compatibility	Operating temperature	Protection	Dimensions (W x l x H)
NL1000	100-240Vac 100W max.	3x motors12/24Vdc 3A max. 1xLed 12/24Vdc 4A max.	1x Anemometer 1x Temperature sensor 1x Rain sensor 4x Dry contact controls	RTS	-20° to +60°	IP65	255x205x62mm

MODULO BOX

This product is designed for optimum integration (e.g. inside the pergola post) and highly modular constructions (extension of actuators and lighting).

EXAMPLES OF MOUNTING

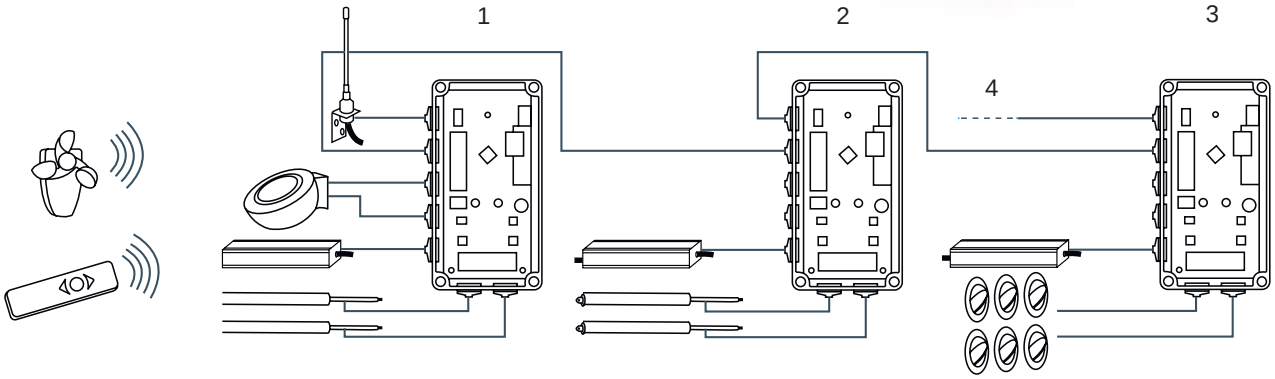

1 Modulo box with 2 actuators
2 Extension actuators (optional)
3 Extension lighting (optional)
4 Additional extensions possible

MODULO 1 ACTUATOR

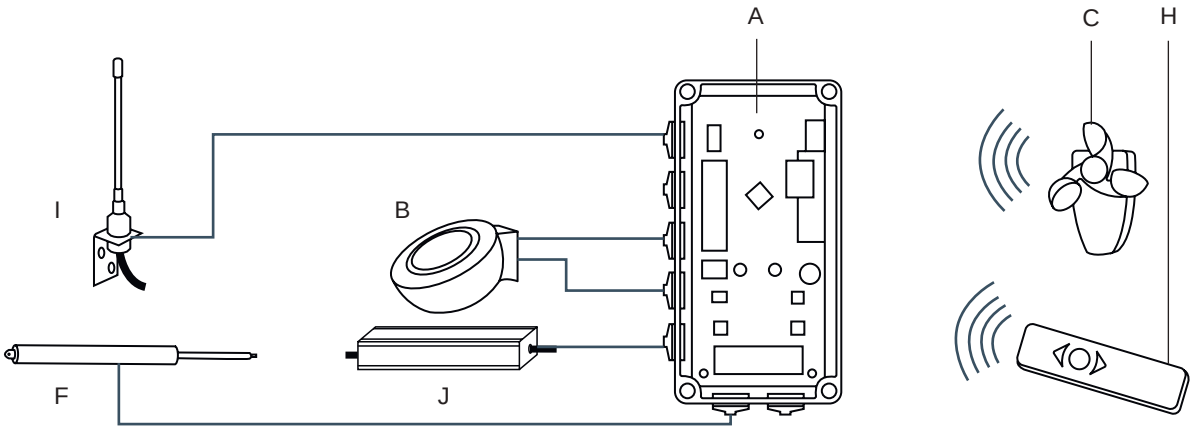

A MODULO Box
B Rain sensor (optional)
C RTS anemometer (optional)
F Actuator output
H Radio remote control (optional)
I External aerial (optional)
J External power supply (optional)

Reference	Power supply	Outputs	Wired inputs	Extension port	Radio compatibility	Operating temperature	Protection	Dimensions (W x l x H)
NL2260-1M	12-24Vdc 100W max.	1x motor 12/24Vdc 6A max.	1x Rain sensor	OUT	RTS	-20° to +60°	IP65	99x185x57mm

MODULO 2 ACTUATORS (available in extension) version)

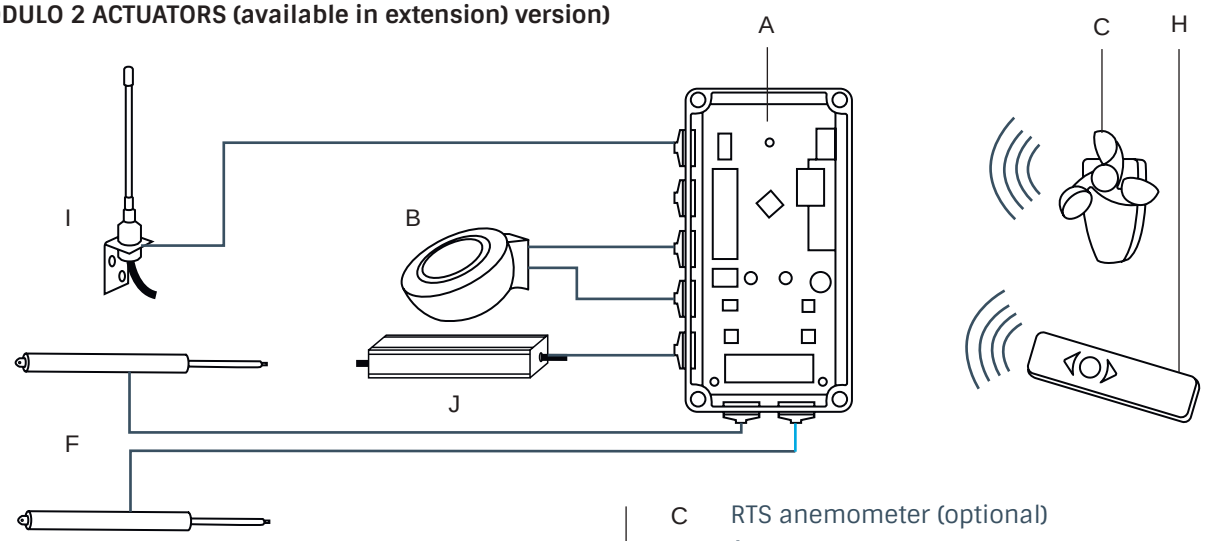

A MODULO Box
B Rain sensor (optional)

C RTS anemometer (optional)
F Actuator outputs
H Radio remote control (optional)
I External aerial (optional)
J External power supply (optional)

Reference	Power supply	Outputs	Wired inputs	Extension port	Radio compatibility	Operating temperature	Protection	Dimensions (W x l x H)
NL2260-2M	12-24Vdc 288W max.	2x motors12/24Vdc 6A max.	1x Rain sensor 4x Dry contact controls	OUT	RTS	-20° to +60°	IP65	99x185x57mm
NL2260-EXT2M	12-24Vdc 288W max.	2x motors12/24Vdc 6A max.	4x Dry contact controls	IN/OUT	RTS	-20° to +60°	IP65	99x185x57mm

MODULO 1 ACTUATOR + 1 LED

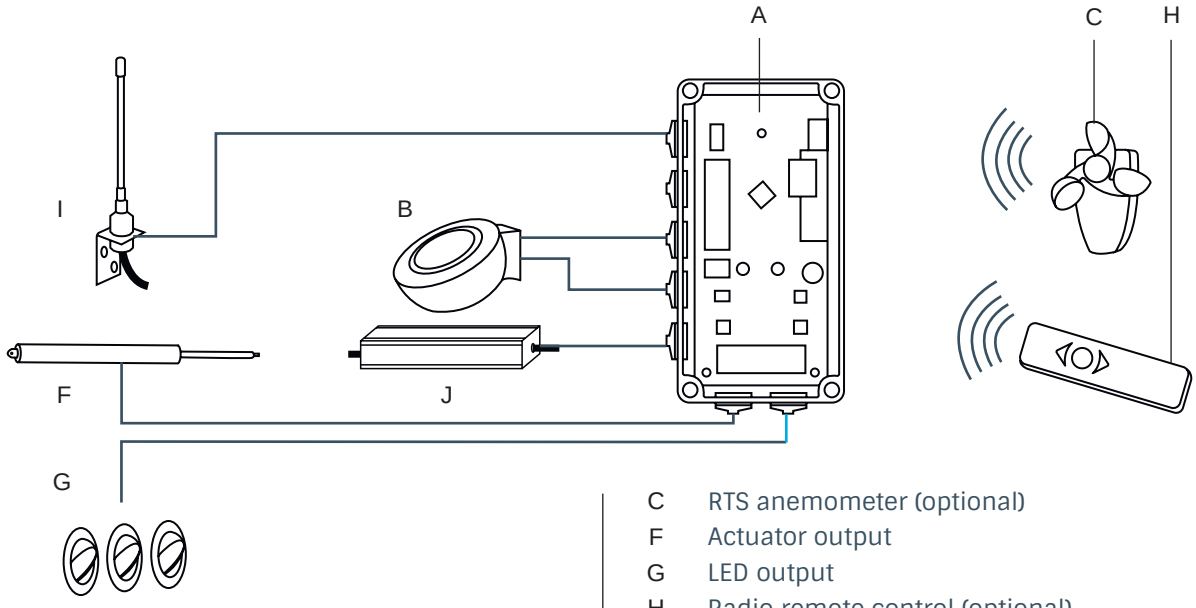

A MODULO Box
B Rain sensor (optional)

C RTS anemometer (optional)
F Actuator output
G LED output
H Radio remote control (optional)
I External aerial (optional)
J External power supply (optional)

Reference	Power supply	Outputs	Wired inputs	Extension port	Radio compatibility	Operating temperature	Protection	Dimensions (W x l x H)
NL2260-1M1L	12-24Vdc 240W max.	1x motor 12/24Vdc 6A max. 1x LED 12/24Vdc 4A max.	1x Rain sensor 4x Dry controls	OUT	RTS	-20° to +60°	IP65	99x185x57mm

MODULO LED (available in extension version)

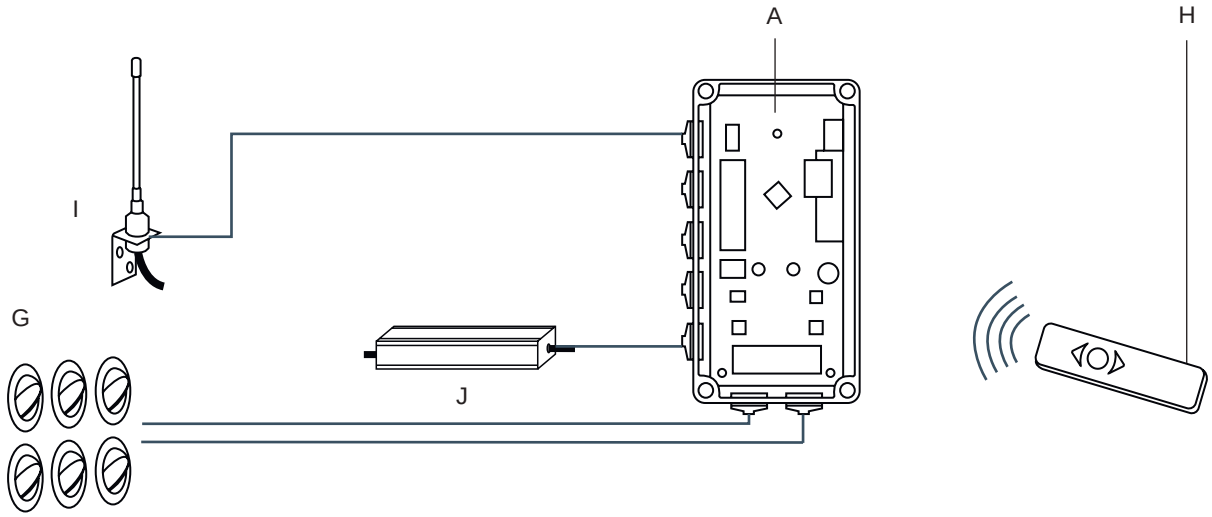

A MODULO Box
G LED outputs
H Radio remote control (optional)
I External aerial (optional)
J External power supply (optional)

Reference	Power supply	Outputs	Extension port	Radio compatibility	Operating temperature	Protection	Dimensions (W x l x H)
NL1486-LED	12-24Vdc 384W max.	4x LED White 12/24Vdc – 4 Amax. Or 1x LED White 12/24 Vdc – 4 Amax. 1x LED RGB 12/24 Vdc – 4 Amax. per colour	OUT	RTS	-20° to +60°	IP65	99x185x57mm
NL1486-EXTLED	12-24Vdc 384W max.	4x LED White 12/24Vdc – 4 Amax. Or 1x LED White 12/24 Vdc – 4 Amax. 1x LED RGB 12/24 Vdc – 4 Amax. per colour	IN/OUT	RTS	-20° to +60°	IP65	99x185x57mm

OPTIONAL ACCESSORIES

POWER SUPPLIES

A variety of power supply models are available, in 12Vdc or 24Vdc, from 60 W to 320 W Please ask for more information.

CONTROLS

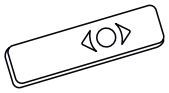

Radio control point (individual or multichannel, wall-mounted or remote control) available. Please ask for more information.

TEMPERATURE, RAIN AND WIND SENSORS

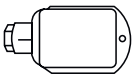

A variety of models of anemometers, rain sensors and temperature sensors are available, as wired or radio units. Please ask for more information.

AERIALS

Remote aerials are available. Please ask for more information.

CABLING ACCESSORIES

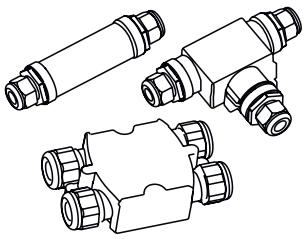

IP67 cabling accessories are available for optimal installation. Please ask for more information.

ACHIEVEMENTS

Credit: Profils systemes ® Wallis&Outdoor model ®

Credit:Distral ® Distra'sun model ® Premium

Credit:Solisysteme ® Élégance et Arlequin pergola model

Thousands of bioclimatic pergolas around the world are now equipped with our control boxes. These images show different configurations of bioclimatic pergolas, but particularly demonstrate how discreet our equipment is.

Credit:Teerawut Masawat

MOTORISED WINDOWS

P46 SLIDING WINDOW

P48 MINIMALIST SLIDING WINDOW

P52 LOUVER MOTORIZATION

SLIDING WINDOW

Motor unit

Motor drive unit for sliding window, ready to fit, new or overhauled.

INTRODUCTION

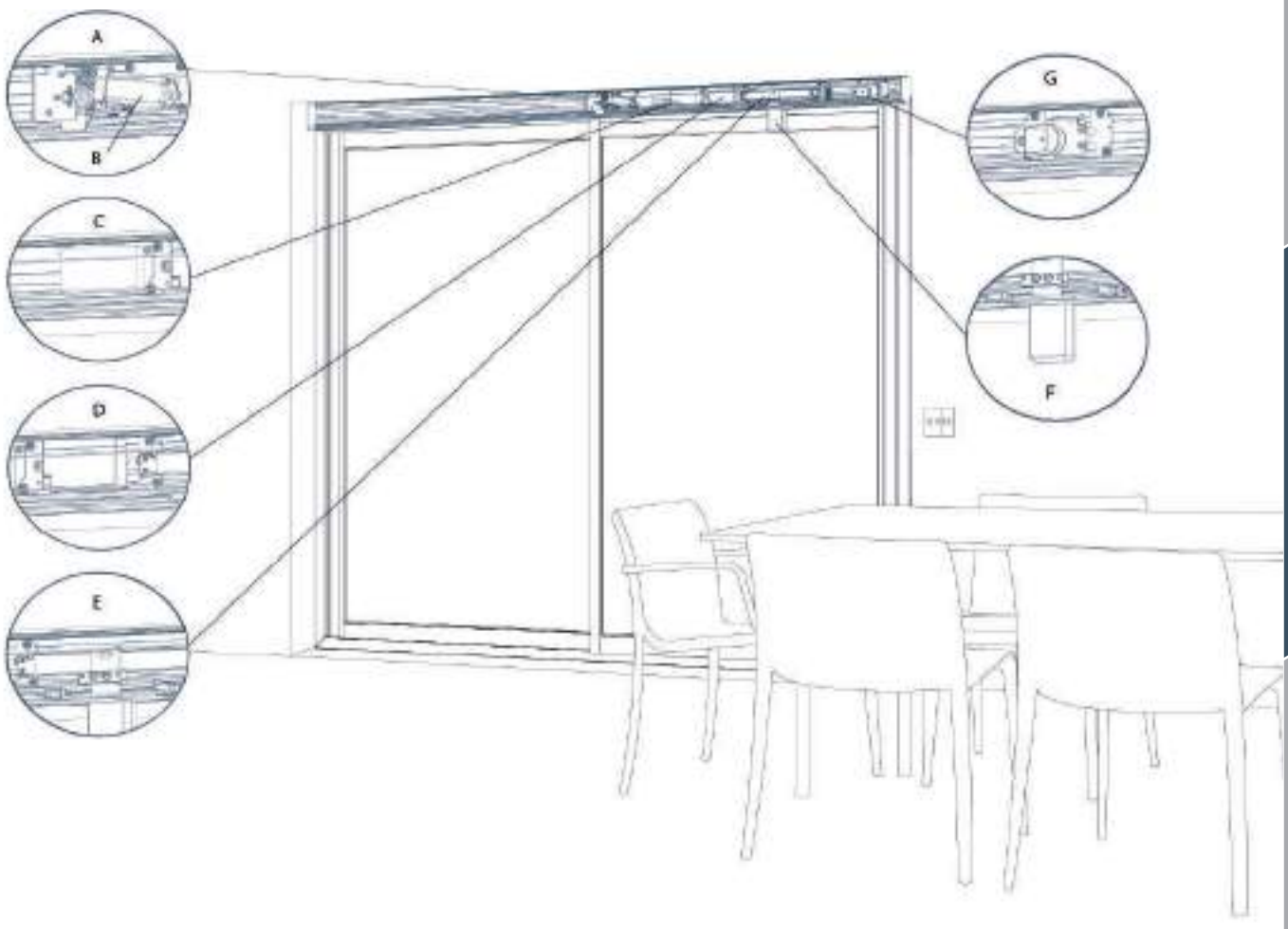

(Example)

A 24V motor
B Drive belt
C Control electronics
D Battery (optional)
E Electrical supply
F Adjustable drive tab
G Guide pulley

BENEFITS

- Surface mounting
- Comfort and ease of use
- Increased energy efficiency of the building
- Simple design and discreet installation
- Rapid, silent movements (150mm/s)

SPECIFICATIONS

- Can be adapted to different window widths
- Anti-pinch safety device
- Acceleration and slowing phase
- Simple operation by radio-control or wired switch
- Compatible with centralised building management systems, building management systems and home automation systems
- Can be adapted to windows 1.3m to 4.8m wide
- 230VAC supply voltage
- Radio technology RTS control
- Maximum weight 150kg for standard and optionally up to 400kg

SLIDING WINDOW

DIMENSIONS

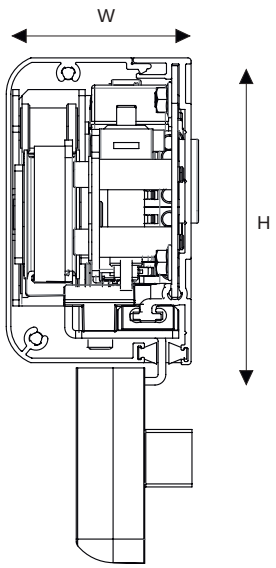

Overall dimensions	
W	60.2mm
H	101mm

CONFIGURATIONS

4 sizes available to fit frame lengths:

Size S Frame from 1.30m to 1.80m Max. movement range of 800mm	
Size M Frame from 1.80m to 2.80m Max. movement range of 1300mm	
Size L Frame from 2.80m to 3.80m Max. movement range of 2300mm	
Size XL Frame from 3.80m to 4.80m Max. movement range of 3300mm	
Size made-to-measure Frame and movement range	

NUMBER OF LEAVES

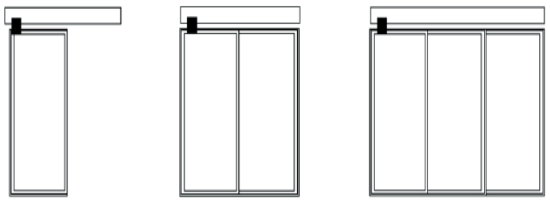

1 panel wall leaf | 2 leaves | 3 leaves

In 3-leaf configuration, the program slows down the system to drive the 2nd leaf.

OPENING DIRECTION

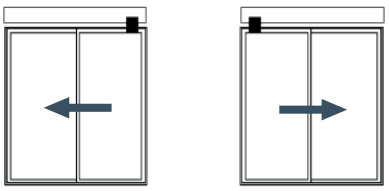

Right to left (seen from inside) | Left to right (seen from inside)

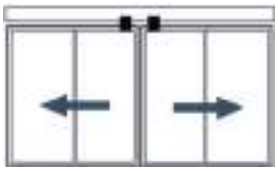

Symmetrical opening

ELECTRICAL CONNECTION

POWER SUPPLY

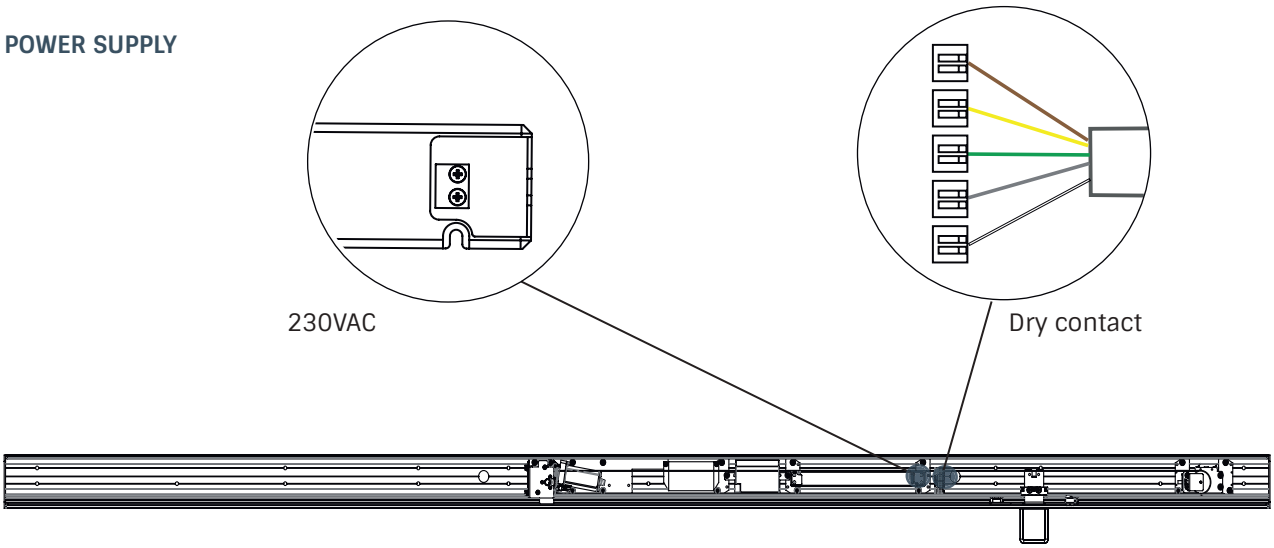

Mains cable (3 x 1.5 mm²) to be inserted into the motor drive unit through the rear panel using the cable grommet. Each wire is connected to the connectors provided.

CONTROL

For wired cabling, it is possible to use the green connector on the electronic board to connect a control device such as a wired switch, a home automation unit or an external radio receiver.

FITTING TYPES

Set of standard tabs and blocks to adapt to commercially-available slide rails.

LACQUERING

POSSIBILITIES OF COLORS OF COVER AND PASTE OF FIXING

The lacquering is to be chosen among 3 colors below (other colors on request):

RAL9005 RAL9010 RAL7016

MINIMALIST SLIDING WINDOW

Motorization kit

Integrated motorization for large size minimalist sliding window.

PRESENTATION

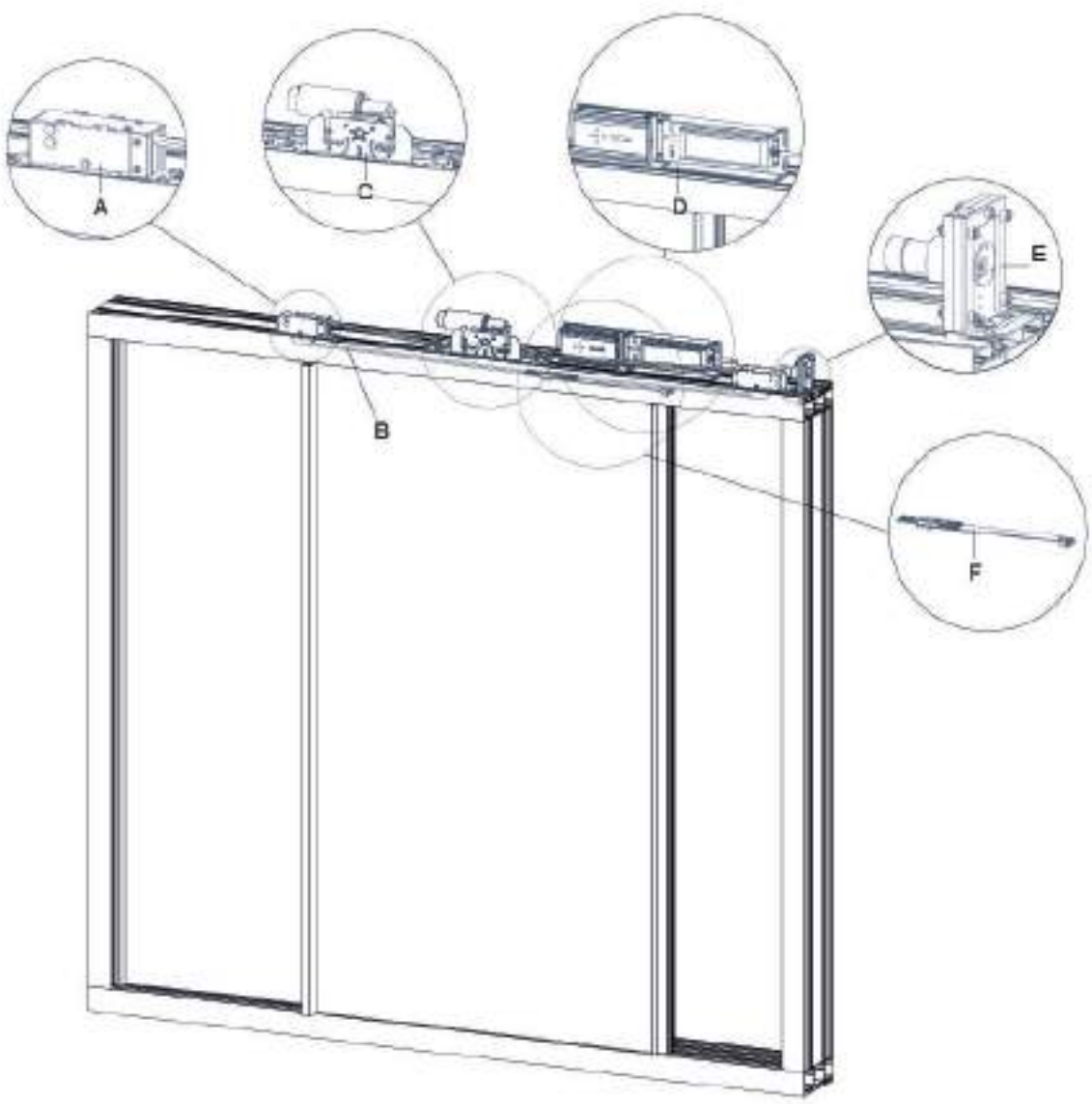

(Example)

A Return pulley block
B Belt
C Engine block
D Control unit
E Locking block
F Fixing bracket transmission system

BENEFITS

- Comfort and ease of use
- Increased energy efficiency of the building
- Simple design and discreet installation
- Multi-configuration management (corner opening, symmetrical...)
- Rapid, silent movements (150mm/s)

SPECIFICATIONS

- Maximum weight up to 1200kg
- Maximum 5 motorizable leaves
- Anti-pinch safety device
- Acceleration and slowing phase
- Simple operation by radio-control or wired switch
- Compatible with centralised building management systems, building management systems and home automation systems
- Locking block in option
- Clutch available in option
- Remote programing
- Power supply 110-230VAC

MINIMALIST SLIDING WINDOW

DIMENSIONS

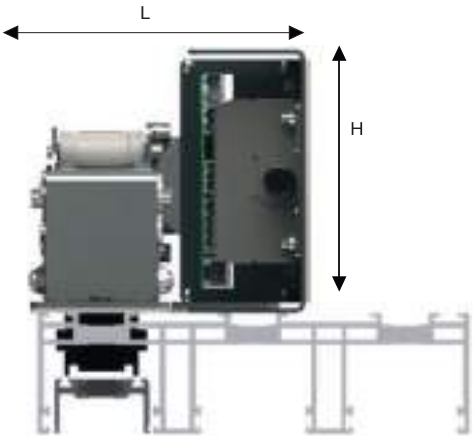

Overall dimensions	
W	123 mm
H	113 mm

CONFIGURATIONS

NUMBER OF LEAVES

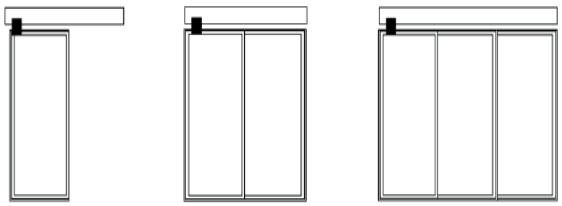

1 panel wall leaf | 2 leaves | 3 leaves

Per motorization :
Maximum weight up to 1200kg
Maximum 5 motorizable leaves up to 1000kg

OPENING DIRECTION

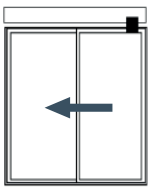

Right to left (seen from inside)

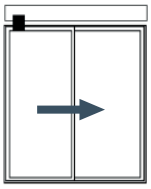

Left to right (seen from inside)

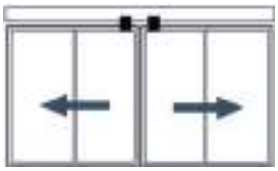

Symmetrical opening

ELECTRONIC CONTROL

A transformer 110-240VAC/24VDC is included in each motorization kit. This power supply can be use with an input voltage from 110VAC to 240VAC, in this way, our motorization is usable all around the word.

ALIMENTATION

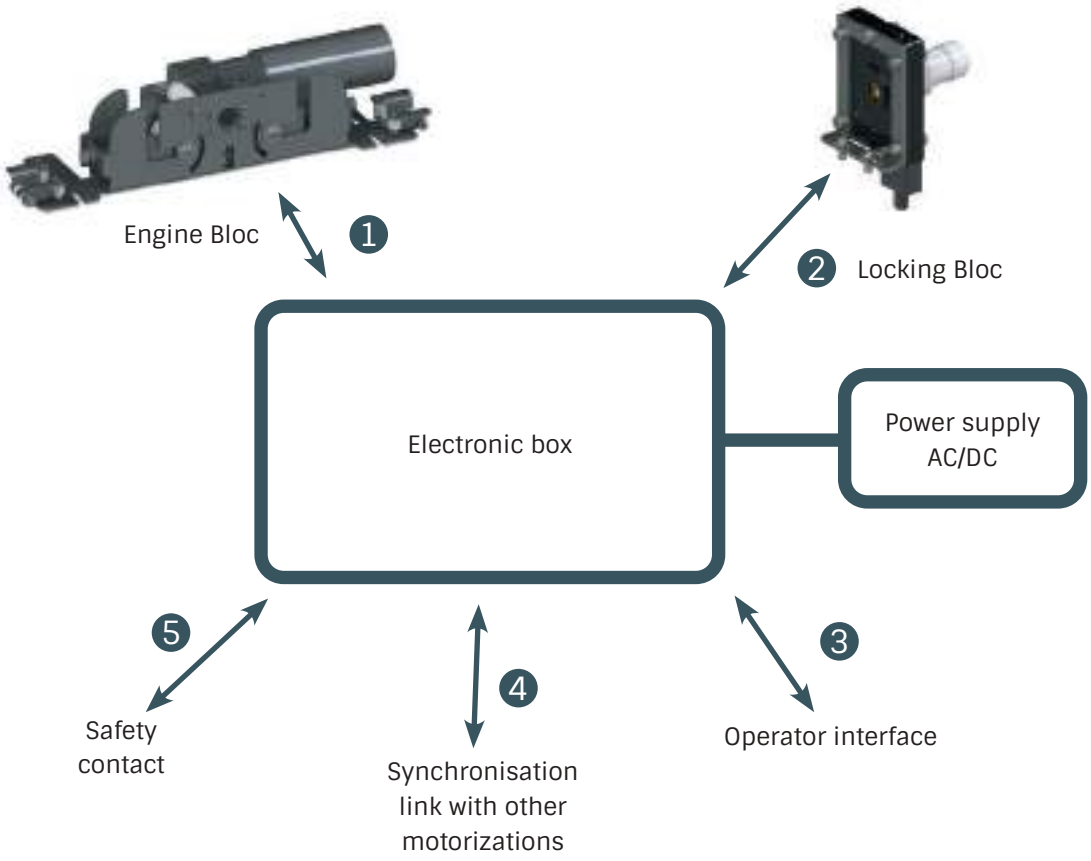

COMMAND

The control of the motorization is done by means of a «dry contacts» input.
This type of input allows universal interfacing with a large number of protocols (Radio, GTC) or with a wired switch. Interfacing with radio modules such as SOMFY, DELTADORE, STIBIL is done using adapted interfaces.

FASTENING

The fixing bracket transmission movement system is fixed in the upper sleeper of the windows. The bridling screws are still accessible by the side of the window to rapidly free the window during a maintenance intervention

LOUVER MOTORIZATION

Standard motorization compatible with many windows in the market.

PRESENTATION

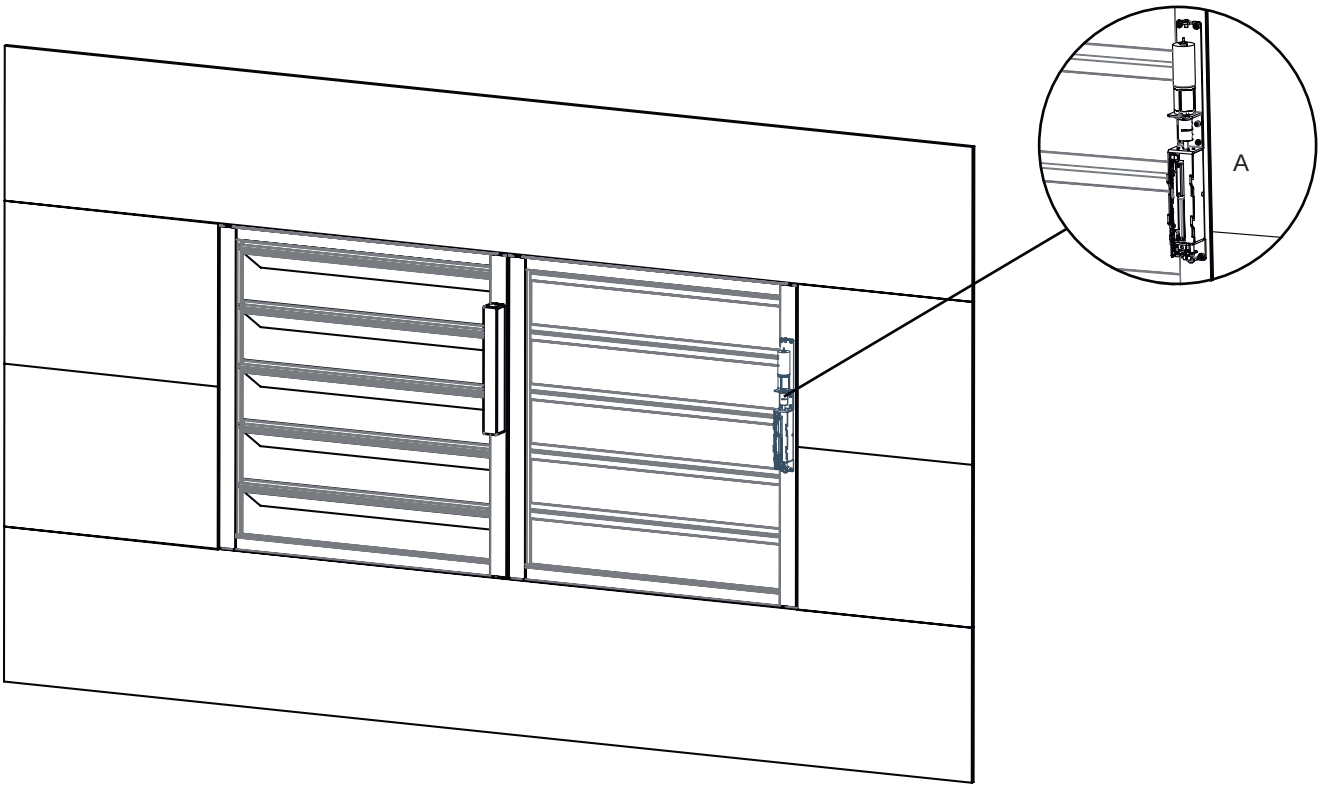

(Example)

A Engine block

IP (min)	IP44 (with cover)	Power (W)	150W
Operating temperature	-20°C / 60°C	Driving force (N)	1200 N
Type of fastener	Frame mounting	Maximum torque (N.m)	4Nm
Type of drive	Drive by cremone	Maximum opening (mm)	55mm
Kit motor size	W38,2 x H43 with cover W36 x H42 without cover	Position information return	Open / Close
Motorization length	325mm	Closing speed	< 5mm/s
Voltage (V)	24V	Control	Dry contact

BENEFITS

- Comfort and ease of use
- Free-cooling
- Modularity

SPECIFICATIONS

- Small size
- Opening adjustment
- Respect for anti-pinch speed
- Frame mounting

CreditNoval

INTERIOR FITTINGS

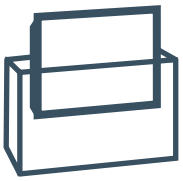

P56 SCREEN LIFTS:

p57 Vertically-moving screen
p58 Screen from the ceiling
p59 Worktop screen

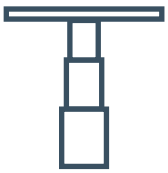

P60 TELESCOPIC TABLE LEGS

Credit:Noval

TV LIFTS

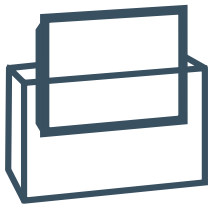

This system, built into an item of furniture, ceiling, wall or work surface, provides motorised storage of a flat screen to save space.

Credit:Noval

VERTICALLY-MOVING SCREEN LIFTS

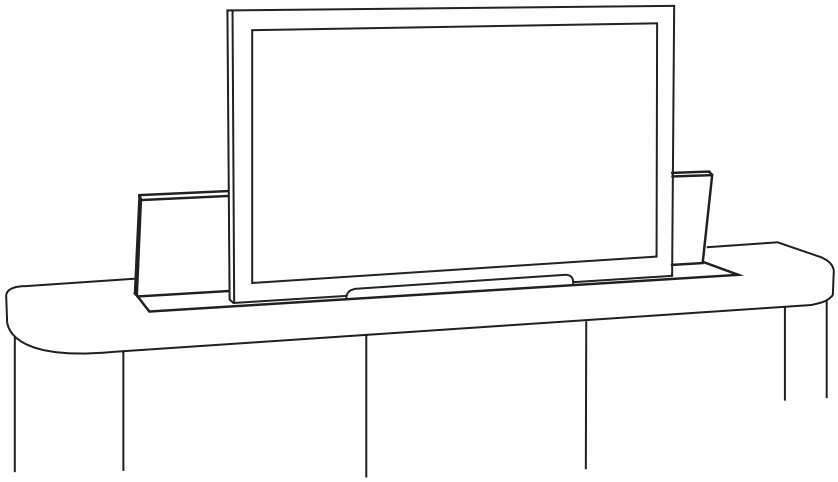

SPECIFICATIONS

- Supply voltage: 12VDC or 24VDC
- The different system components are made of RAL 9005 (black) thermo-lacquered electro-galvanised steel and 20 micron colourless anodised aluminium. Please just ask us about other colours.
- All these systems are compatible with VESA 75, VESA 100, VESA 200 mounting standards.
- Several sizes are available

DIMENSIONS

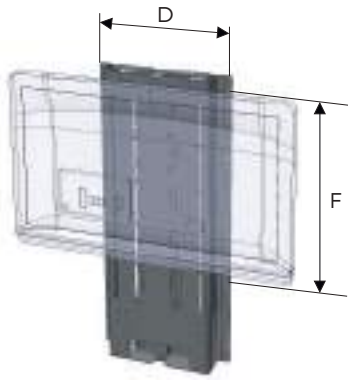

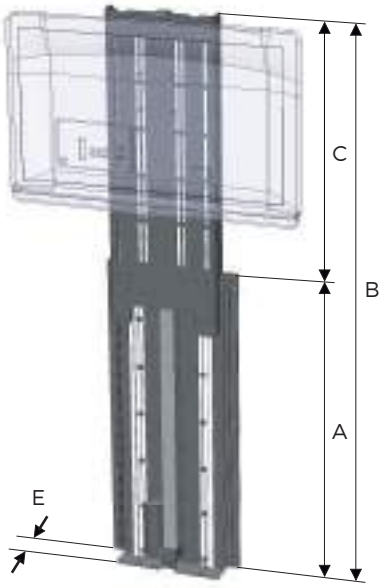

Standard dimensions								
Reference	Description	Voltage	Dimensions					
			Retracted height (A)	Extended height (B)	Range (C)	Width (D)	Thickness (E)	Max. TV height (F)
NL1260 - 12V	TV LIFT ST515 12V	12VDC	650 mm	1165 mm	515 mm	300 mm	58 mm	500 mm
NL1260 - 24V	TV LIFT ST515 24V	24VDC						
NL1177 - 12V	TV LIFT ST565 12V	12VDC	700 mm	1265 mm	565 mm			550 mm
NL1177 - 24V	TV LIFT ST565 24V	24VDC						
NL1261 - 12V	TV LIFT ST615 12V	12VDC	750 mm	1365 mm	615 mm			600 mm
NL1261 - 24V	TV LIFT ST615 24V	24VDC						
NL1413 - 12V	TV LIFT ST715 12V	12VDC	885 mm	1600 mm	715 mm			700 mm
NL1413 - 24V	TV LIFT ST715 24V	24VDC						

SCREENS LIFTS FROM THE CEILING

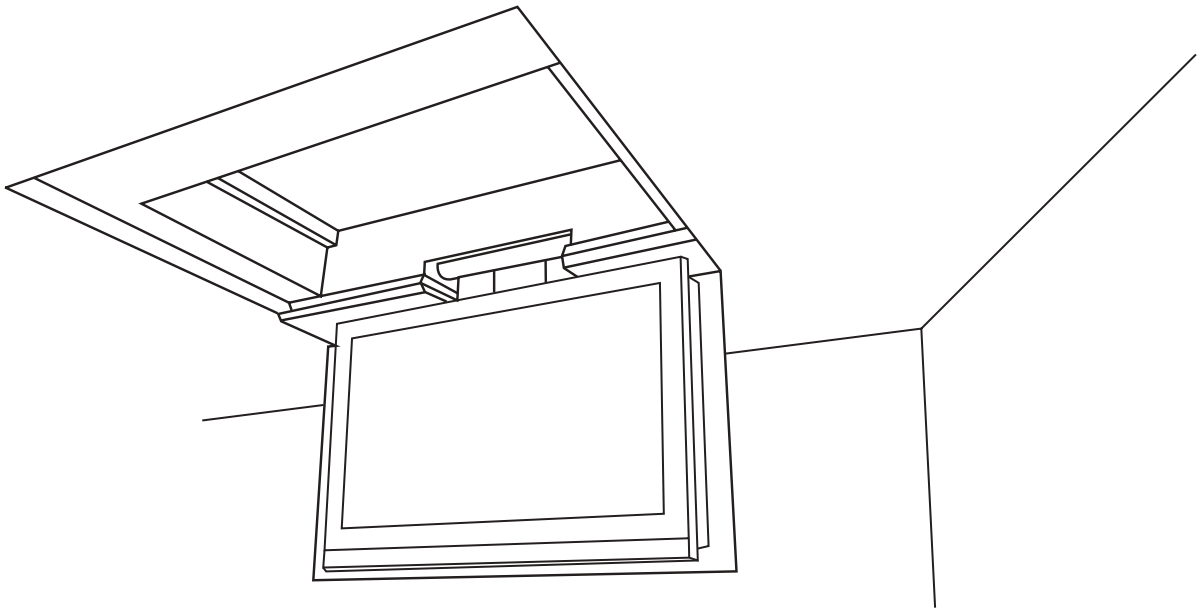

SPECIFICATIONS

- Supply voltage: 24VDC as standard.
- Rotation angle adjustable between 90º and 100º. 1 radio remote control as standard.
- Fluid movement with acceleration and deceleration phase at start and end of range.
- Automatic locking system in closed position to protect the device and screen.
- Structure made of RAL 90010 thermo-lacquered electro-galvanised steel as standard. Other colours are possible on request.
- System fitted with protection that stops movement when unexpected forces interact with the system (obstacle, etc.)

DIMENSIONS

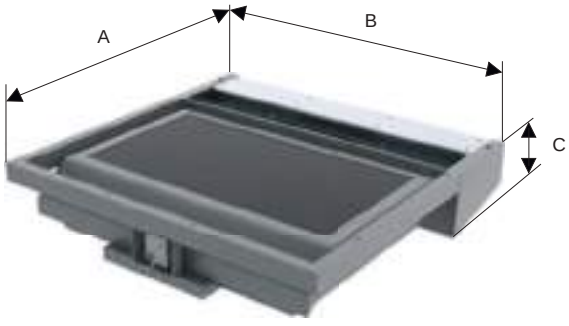

Overall dimensions	
A	896 mm
B	912mm
C	176 mm
D	810 mm

Maximum screen size	
Max. TV height	550 mm
Max. TV thickness	125mm
Max. TV width	With TV thickness < 85 mm: no restriction
	With TV thickness > 85 mm: 810 mm

SCREEN LIFTS FROM A WORKTOP

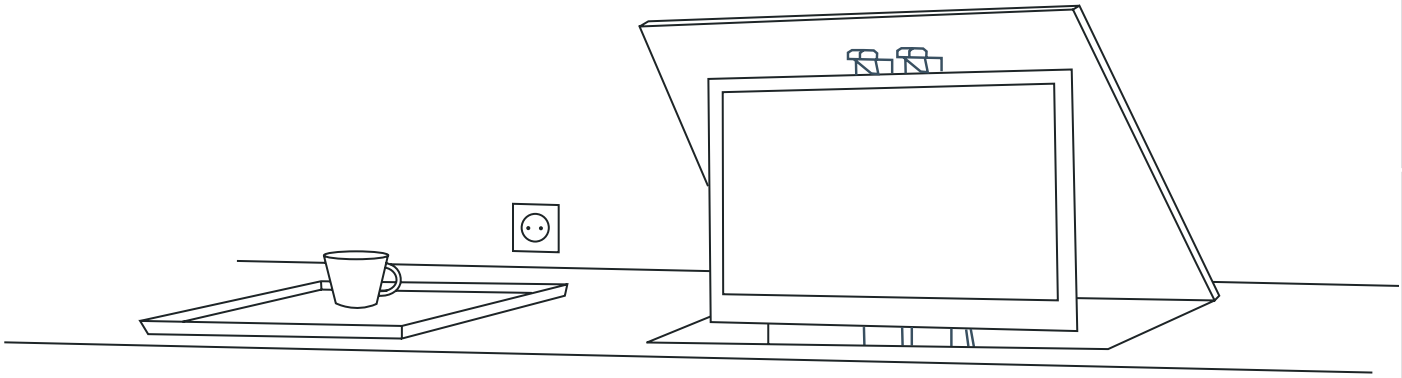

SPECIFICATIONS

- Supply voltage: 24VDC as standard, 12VDC possible on request.
- The rotation angle is 82° as standard.
- The weight of this system is 8kg.
- The components of the system are made of RAL 9005 (black) thermo-lacquered electro-galvanised steel and black Polyacetal.
- Several sizes are available.

DIMENSIONS

Model	Dimensions	TV mounting standard	Max. TV size
26 INCH model (66cm) Ref. NL0673	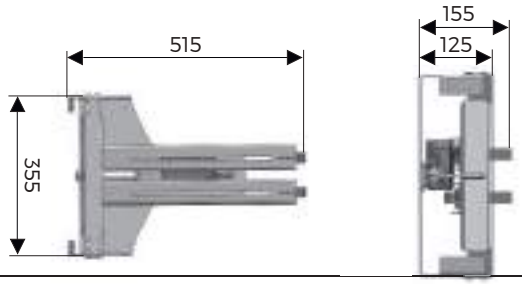	VESA 75 and 100 as standard VESA 200 as option	Height 415 mm Depth 50 mm
32 INCH model (82cm) Ref. NL0931	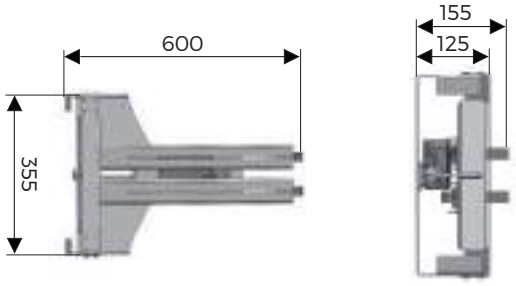	VESA 75 and 100 as standard VESA 200 as option	Height 500 mm Depth 50 mm

- Other screen sizes are available on request.

CONTROL SOLUTIONS

MOUNTING WITH 6-POINT MOM OFF MOM SWITCH NL1494

The switch enables polarity to be inverted, so a control box is not required.

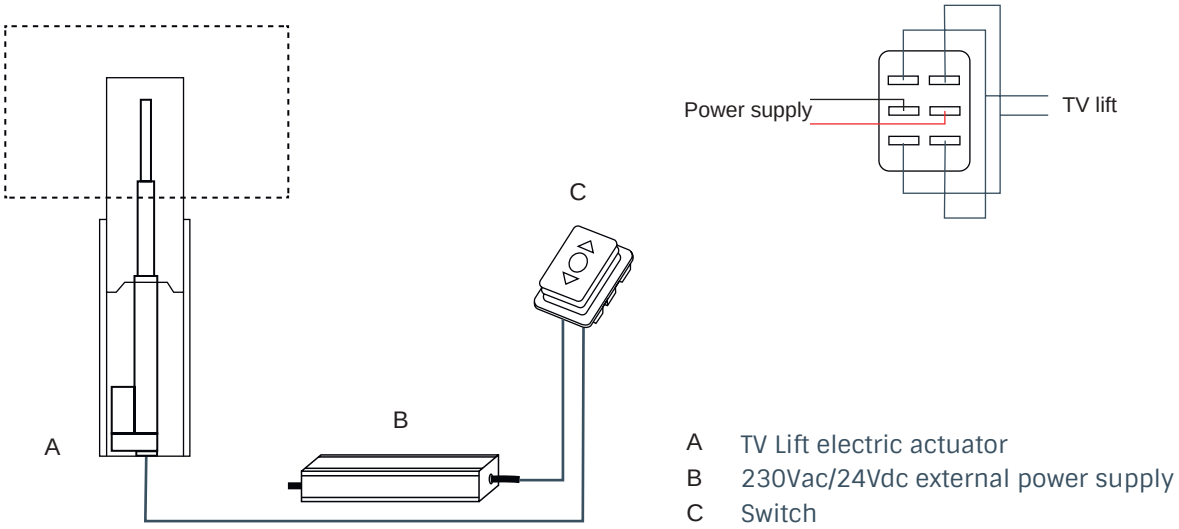

A TV Lift electric actuator
B 230Vac/24Vdc external power supply
C Switch

MOUNTING WITH CONTROL BOX

A control box allows the use of all types of wall switches and/or a remote control.

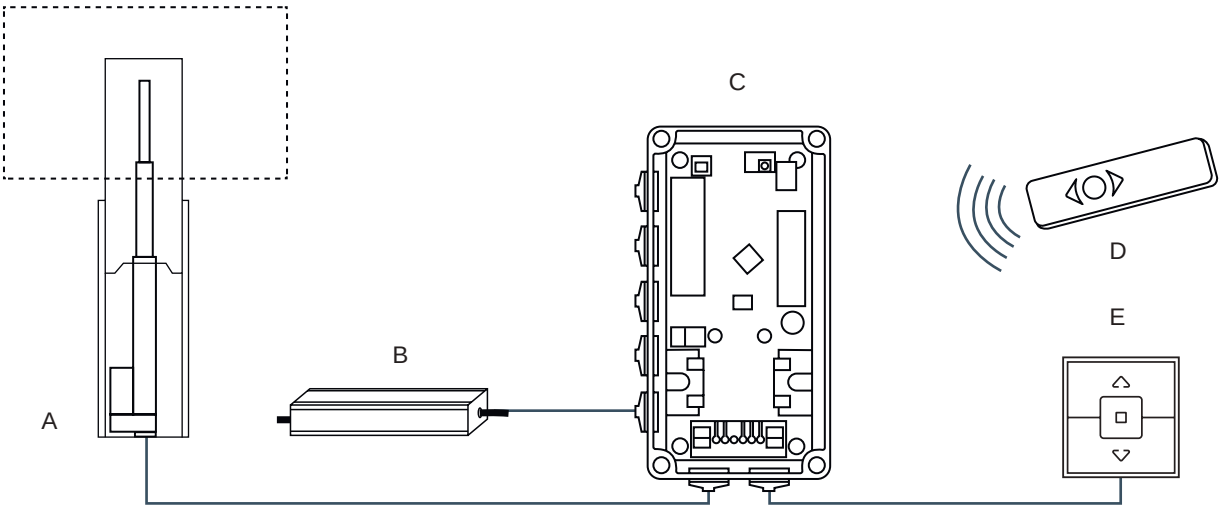

A TV Lift electric actuator
B 230Vac/24Vdc external power supply
C Control box
D Radio remote control
E Wall switch

OPTIONAL ACCESSORIES

POWER SUPPLIES

A variety of converter models are available to meet your requirements.
Please ask for more information.

REMOTE CONTROLS

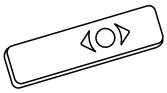

A variety of remote control models are available, both Somfy
and Noval references, produced to different home automation standards.

WALL SWITCHES

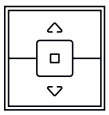

Used to operate the TV LIFT (needs a control box). A variety of models
are available, Somfy, Legrand or Noval references, wired or radio-operated.

MOM OFF MOM SWITCH

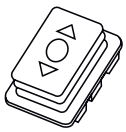

Used to operate the TV LIFT without the need for a control box.

CONTROL BOXES

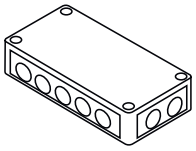

Allows the use of all types of wall switches and/or a remote control.

AERIALS

Used to improve radio range.

SHELVES / BRACKETS KIT

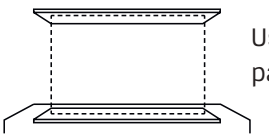

Used to fix a shelf above and/or beneath the system to fill the cut-out for the screen to pass through (only for the vertically-moving lift).

Credit:Noval

TELESCOPIC TABLE LEGS

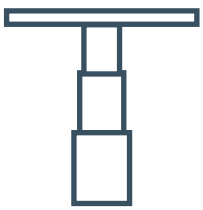

This system uses a motor drive to raise and lower a table top, both outdoors and indoors.

Credit:Noval

INTRODUCTION

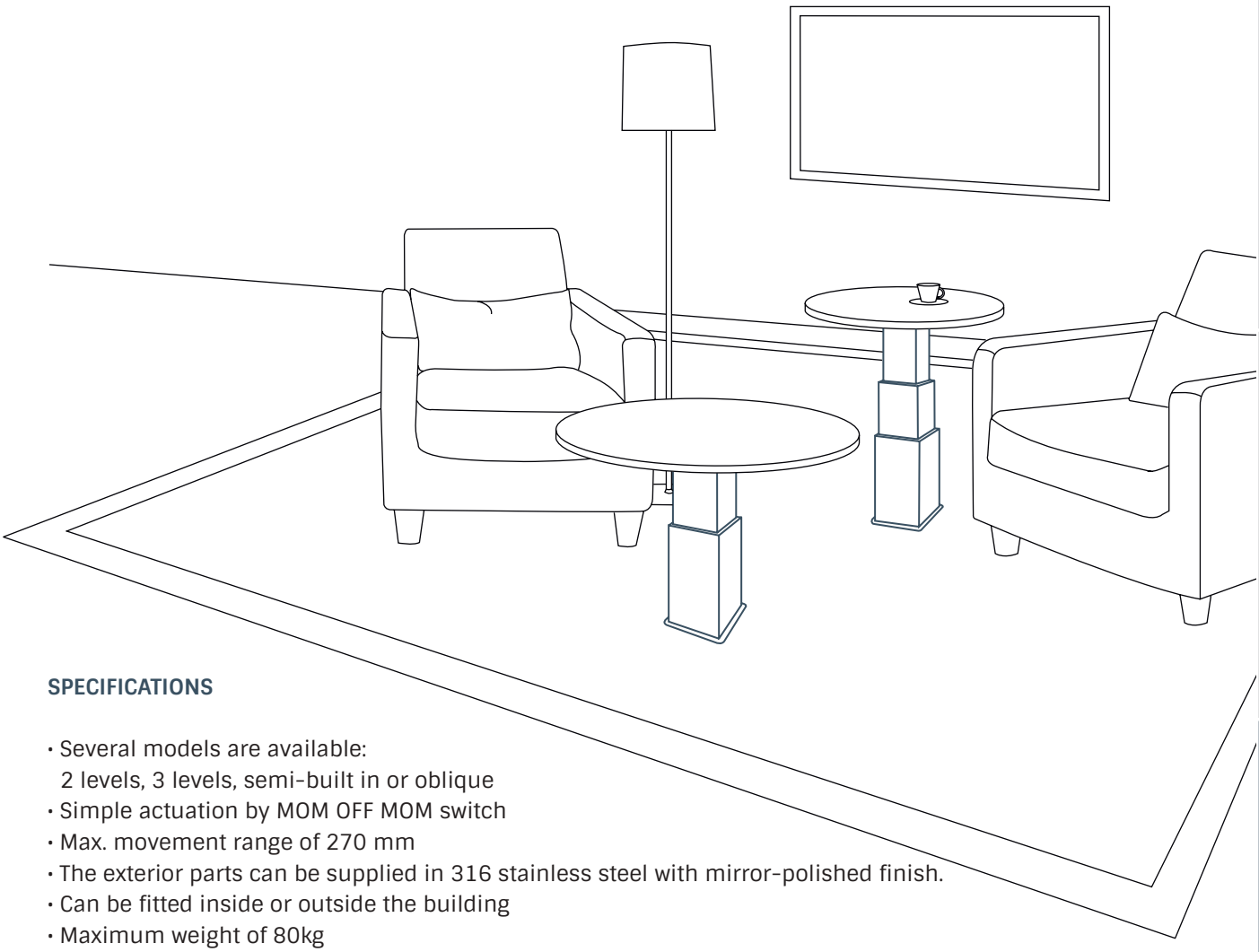

SPECIFICATIONS

- Several models are available:
  2 levels, 3 levels, semi-built in or oblique
- Simple actuation by MOM OFF MOM switch
- Max. movement range of 270 mm
- The exterior parts can be supplied in 316 stainless steel with mirror-polished finish.
- Can be fitted inside or outside the building
- Maximum weight of 80kg
- Power supply as 12 or 24Vdc or 230Vac
- Radio remote control option
- The operation of two motor drives can be synchronised

DIMENSIONS

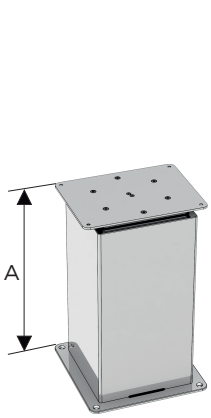

2 levels retracted

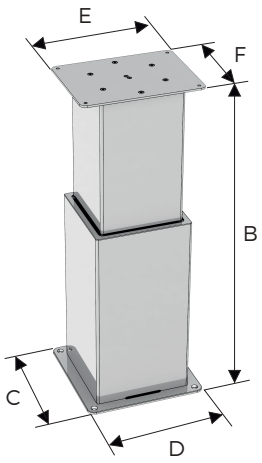

2 levels extended

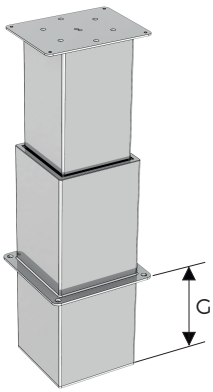

2 levels semi-built in

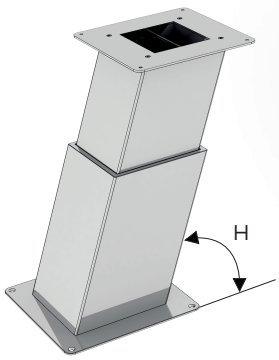

2 levels oblique

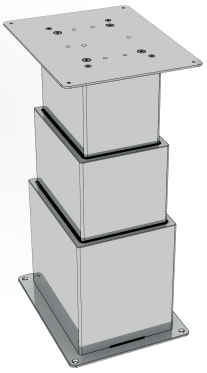

3 levels

TELESCOPIC TABLE LEGS

• Table legs can be synchronised 2 by 2, using a synchronisation box. These are listed in our references marked – SYNC.
• All the dimensions below are our standard units. Please contact us about specific sizes.

Reference	Voltage	I	Nominal speed	Dimensions						
				Retracted height (A)	Extended height (B)	Range	Lower plate (C x D)	Upper plate (E x F)	Offset (G)	Tilt (H)
2-LEVEL MODEL										
NL0885 NL0885-SYNC	12VDC	10A	12 mm/s	404 mm	674 mm	270 mm	250x250 mm	188x250 mm	-	-
NL0886 NL0886-SYNC	24VDC	5A	12 mm/s	404 mm	674 mm	270 mm	250x250 mm	188x250 mm	-	-
NL1180 NL1180-SYNC	12VDC	10A	12 mm/s	404 mm	674 mm	270 mm	400x400 mm	188x250 mm	-	-
NL1181 NL1181-SYNC	24VDC	5A	12 mm/s	404 mm	674 mm	270 mm	400x400 mm	188x250 mm	-	-
NL2050 NL2050-SYNC	12VDC	10A	12 mm/s	274 mm	414 mm	140 mm	250x250 mm	188x250 mm	-	-
NL2051 NL2051-SYNC	24VDC	5A	12 mm/s	274 mm	414 mm	140 mm	250x250 mm	188x250 mm	-	-
2 LEVELS SEMI-BUILT IN MODEL										
NL1910 NL1910-SYNC	12VDC	10A	12 mm/s	300 mm	700 mm	400 mm	250x250 mm	188x250 mm	234 mm	-
NL1911 NL1911-SYNC	24VDC	5A	12 mm/s	300 mm	700 mm	400 mm	250x250 mm	188x250 mm	234 mm	-
3-LEVEL MODEL										
NL2079 NL2079-SYNC	12VDC	10A	15 mm/s	313 mm	637 mm	324 mm	355x280 mm	355x280 mm	-	-
NL2080 NL2080-SYNC	24VDC	5A	15 mm/s	313 mm	637 mm	324 mm	355x280 mm	355x280 mm	-	-
NL2146 NL2146-SYNC	12VDC	10A	15 mm/s	340 mm	664 mm	324 mm	355x280 mm	355x280 mm	-	-
NL2147 NL2147-SYNC	24VDC	5A	15 mm/s	340 mm	664 mm	324 mm	355x280 mm	355x280 mm	-	-
NL2148 NL2148-SYNC	12VDC	10A	15 mm/s	366 mm	690 mm	324 mm	355x280 mm	355x280 mm	-	-
NL2149 NL2149-SYNC	24VDC	5A	15 mm/s	366 mm	690 mm	324 mm	355x280 mm	355x280 mm	-	-

• The legs of oblique 2-level tables are not included in this summary table. Please call us to ask about the technical specifications and to request more information.

OPTIONS

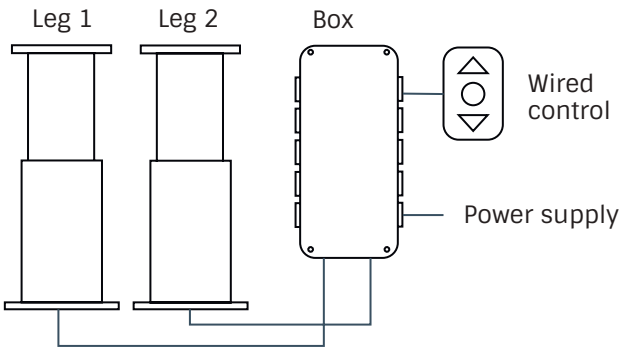

If 2 legs have to be synchronised (2 legs for 1 table), a synchronisation box must be used.

POWER SUPPLIES

A variety of converter models are available to meet your requirements.
Please ask for more information.

REMOTE CONTROLS

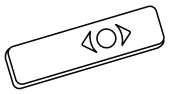

A variety of remote control models are available, both Somfy and Noval references, produced to different home automation standards.

WALL SWITCHES

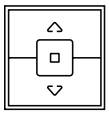

Used to operate the table-lift (requires a control box). A variety of models are available, Somfy, Legrand or Noval references, with wired or radio control.

MOM OFF MOM SWITCH

Used to operate the table-lift without the need for a control box.

CONTROL BOXES

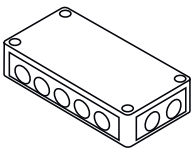

Allows the use of all types of wall switches and/or a remote control.

AERIALS

Used to improve radio range.

Credit:Matthieu Plante

SPECIAL PROJECTS

P70 VEOLIA HEAD OFFICE
(Tilting sunshade)

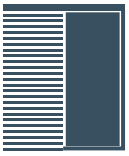

P72 PERI XV
(Motorised folding shutters)

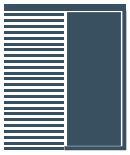

P74 HAUTE-GARONNE GENERAL COUNCIL
(Motorised sunshade curtains)

P76 10 RUE GRENELLE
(Folding sunshade with
light shelf)

P78 MONTÉVRAIN SCHOOLS
(Folding sunshade)

P80 MAISON BAYARD
(Sliding folding shutters)

NOVAL ADAPTS ITS PRODUCTS

REQUIREMENTS

NOVAL supports architects, design offices and economists through the different phases of their projects, using its creativity and all its expertise in designing and producing motorisation solutions to operate and control functional components of the building.

Based on a finalised specification or simply by presenting an identified need, we produce a system for you, making full use of our mechatronic skills while meeting your requirements and constraints, with your complete satisfaction as our sole aim.

In the preliminary phase, our engineers advise you in the choice of the most appropriate solutions for your sun protection, your windows or your interior fittings.

To draw up your documents, NOVAL provides clear and detailed information with the various drawings required, anticipating the installation phases.

NOVAL offers complete solutions, from design to full-scale manufacturing of products, at different levels of integration from a simple sub-assembly to the complete ready-to-fit solution.

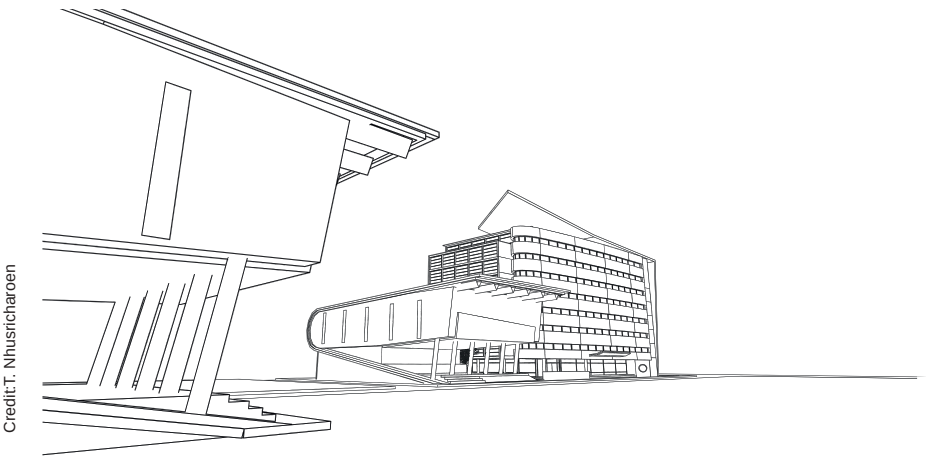

Credit:T. Nhusricharoen

TO YOUR SPECIALPROJECTS

CAPABILITIES AND EXPERTISE

All NOVAL solutions offer broad possibilities to adapt the appearance and technical properties to best fit your functional, architectural and economic requirements.

NOVAL adapts to your specific project by offering:

- Technical advice at the start of the project
- Development of new technical solutions
- Submission of a detailed proposal
- Support in the different phases of your installations
- Adaptable catalogue products
- Creation of specific products

STANDARD MARKETS

NOVAL works on different types of constructions and projects:

- Offices (appearance, cladding of the facade)
- Hotels (comfort and security)
- Local authorities (smart building, centralised control)
- Health (retirement homes, hospitals, nursing homes)
- Blocks of flats (RT2012: energy savings)
- Private houses (Accessibility, HQE home)

VEOLIA HEAD OFFICE

Tilting system for vertical tilting sunshades.

NOVAL worked on integrating motorisation into the facades, taking into account all aspects of the project (mechanical integration, operation and interfacing with the centralised building management system, addition of a locking system for maintenance and cleaning operations, sectioning the facade and reducing the number of motors needed, etc.).

Total surface area of the facade: 2340m²

AUBERVILLIERS (93)

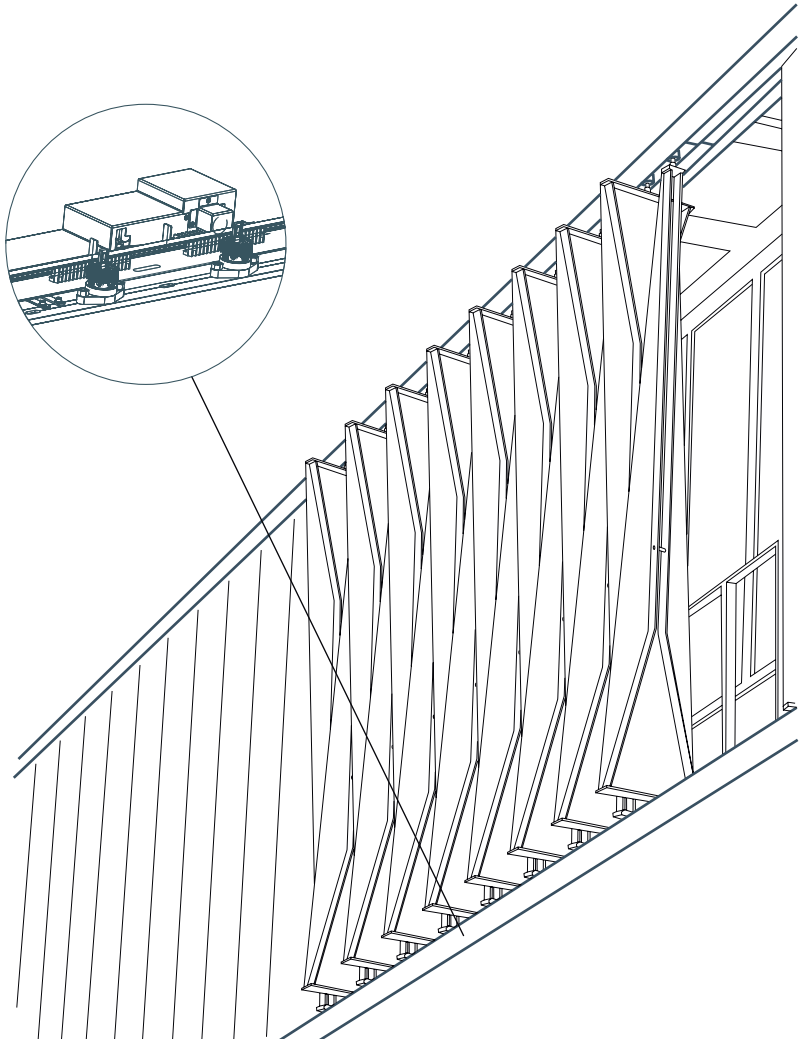

Photo credits: Matthieu Plante

TILTING SUNSHADE

Address:
VEOLIA HEAD OFFICE
30 Rue Madeleine Vionnet
93300 Aubervilliers

NOVAL	OEM: BATEG	Architect: Dietmar Feichtinger	Date: 2015
	Facade specialist: Hasmatik	Description and quantities:	1833 sunshade blades with trapezoidal “twist” shape

LA POSTE PARIS HEAD OFFICE,

Renovation and adding floors to an existing 1990 building, to house the head office of La Poste.

The building had to be brought up to standard to comply with the most demanding certifications (HQE and BREEAM). In this context the architect wished to install more than 2400 motorised folding shutters for optimum management of heat input from sunlight.

FIFTEENTH ARRONDISSEMENT

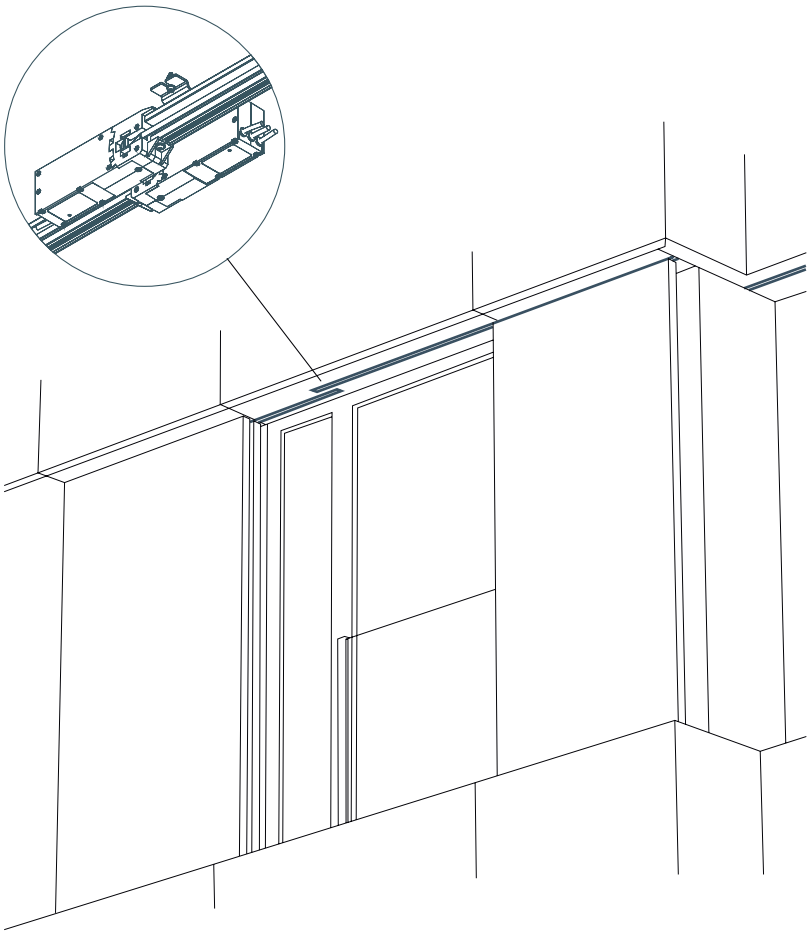

Photo credits: Matthieu Plante

SLIDING FOLDING SHUTTERS

Address:
LA POSTE HEAD OFFICE
9 rue du colonel Pierre Avia
75015 Paris

NOVAL	OEM: SICRA	Architect: Christian de Portzamparc	Date: 2014
	Facade specialist: Tosoni	Description and quantities: 2400 motorised sliding shutters	

HAUTE-GARONNE

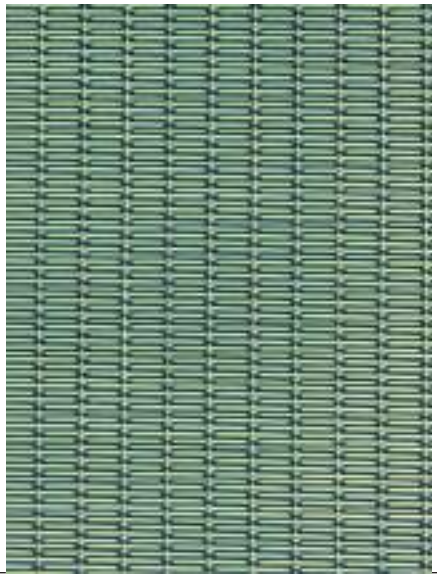

For this office building, 780 ‘silver’ and ‘gold’ woven aluminium mesh sunshade curtains were fitted in the facade.

They can be operated during the day, individually or in groups, creating an eye-catching facade.

In the evening, all the curtains are closed automatically, restoring the facade to its initial uniformity.

GENERAL COUNCIL (31)

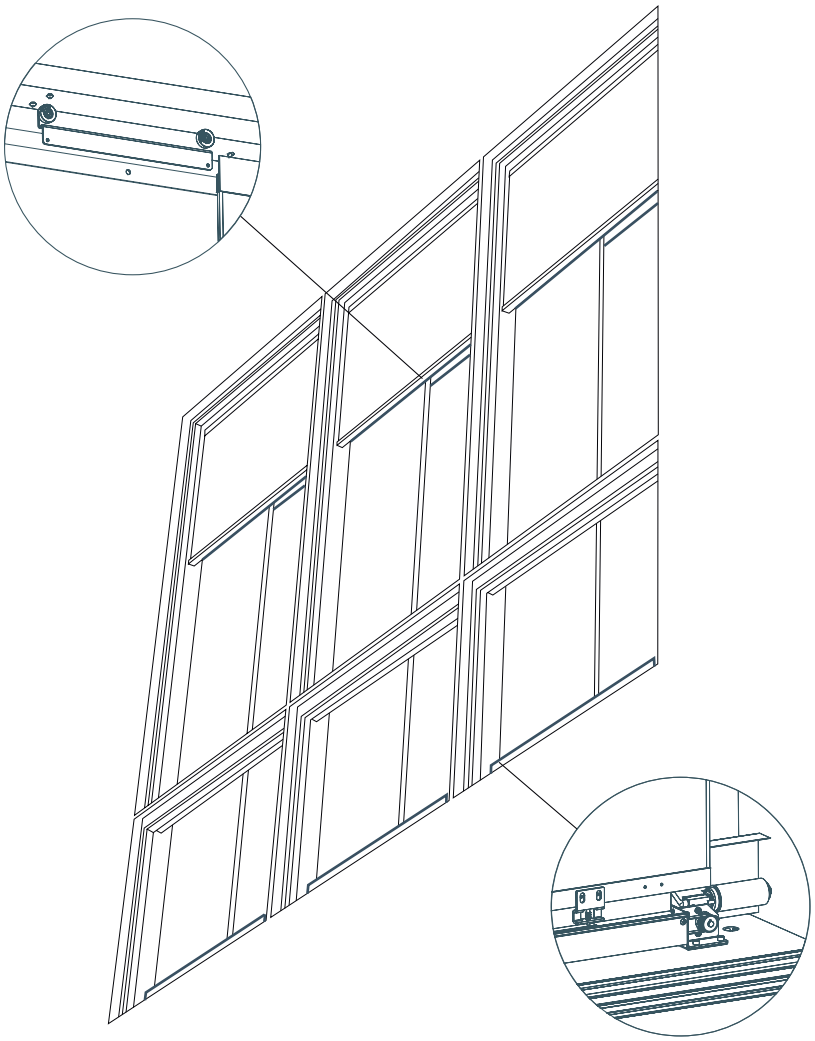

Credit:Noval

SUNSHADE CURTAINS

Address:
HAUTE-GARONNE GENERAL COUNCIL
1 Boulevard de la Marquette,
31090 Toulouse

NOVAL	OEM: Eiffage	Architect: Espagno Milani Architectes	Date: 2010
	Facade specialist: Realco	Description and quantities: 780 'silver' and 'gold' woven aluminium mesh sunshade curtains	

10 GRENELLE PARIS,

Based on the standard folding sunshade product, NOVAL added a cover that opens when the shutter is folded, specially for this office building. This cover maximises light inside the building while limiting direct heat input from sunlight.

The building's 2 facades have nearly 700 folding shutters which, together with a Centralised Technical Management system, sunlight sensors and a 'shadow management' function, help to reduce the building's energy expenditure.

FIFTEENTH ARRONDISSEMENT

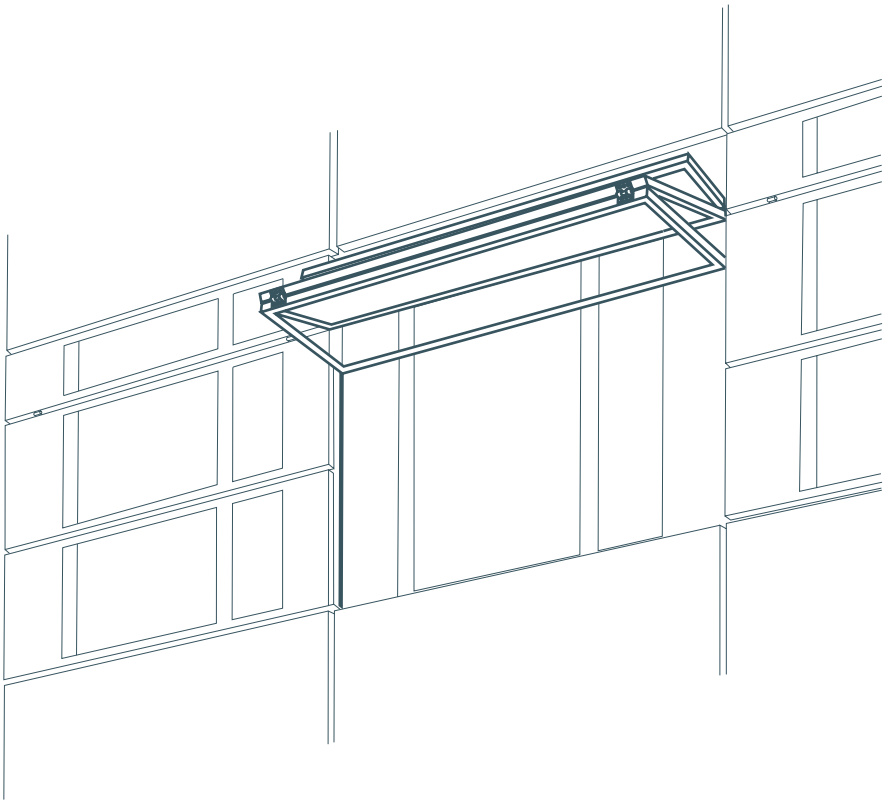

Credit:Noval

FOLDING SUNSHADE

Address:
10 Grenelle
10 boulevard de Grenelle
75015 Paris

NOVAL	OEM: Bouygues	Architect: Braun et associés	Date: 2015
	Facade specialist: Inasus	Description and quantities:	700 motorised frames with folding covers

MONTÉVRAIN SCHOOLS (77)

Integrating the folding shutter into a dense facade complex meant adapting the support frames and hinge systems. In the closed position, the outline is maintained and the building is transformed into a set of uniform cubes.

In the folded position, the view to the outside is unobstructed, while also significantly reducing heat input. This school, at the heart of a new eco-district, is one of the first passive establishments of its kind in France.

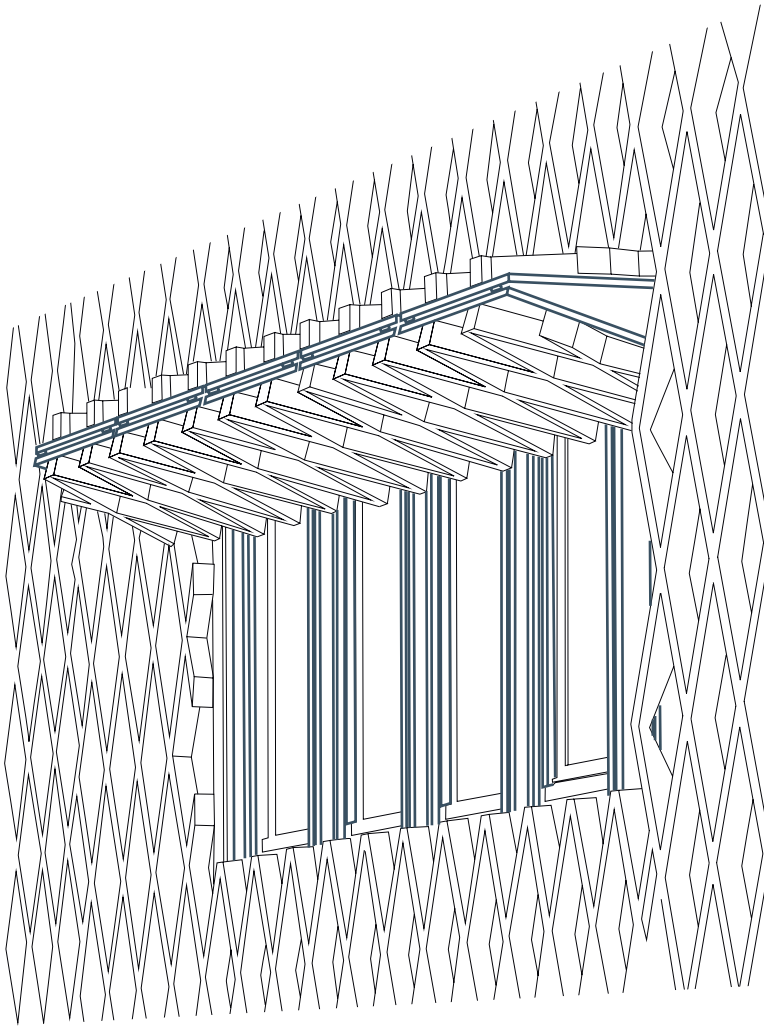

FOLDING SUNSHADE

Photo credits: Matthieu Plante

Address:
Groupe scolaire Louis de Vion
4 rue Bonne Mouche
77144 Montévrain

NOVAL	OEM: AAVP Architecture	Architect: AAVP Architecture	Date: 2015
	Facade specialist: SATOB	Description and quantities: 55 motorised heavy load folding sunshades	

MAISON BAYARD, PARIS

Integration of motorization of sliding shutters in the context of a heavy reconstruction of three interlocking buildings, including the one dating from the 1970s that housed the emblematic radio station RTL.

In this context, we had to adapt our solution to fit into this new façade with its elegant and muted atmosphere of matt perforated brass with golden shades.

EIGHTH ARRONDISSEMENT

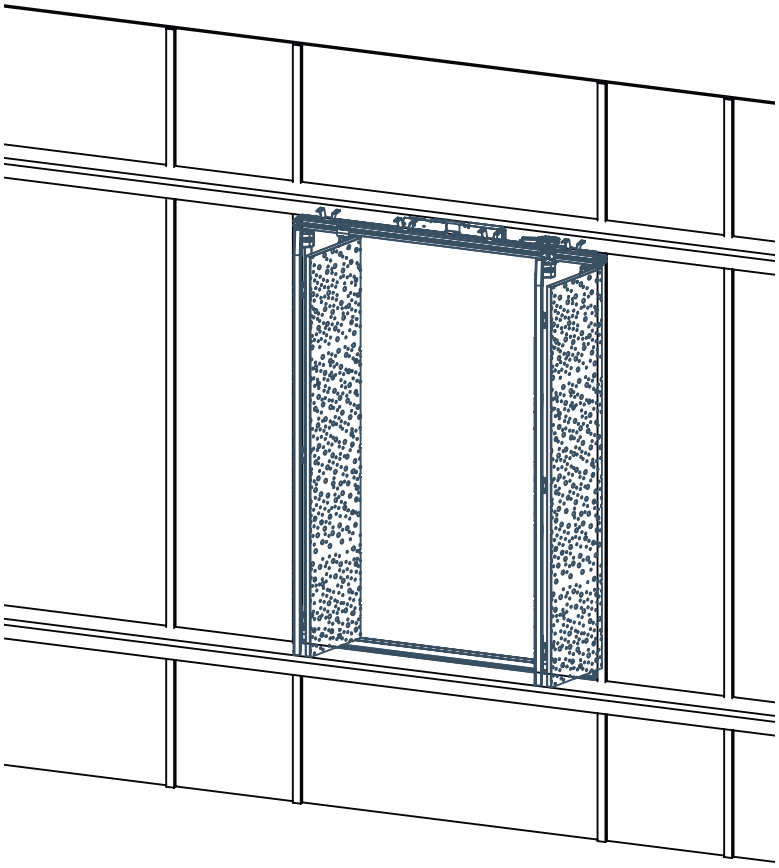

Crédits :Matthieu Plante

SLIDING FOLDING SHUTTER

		Adress:	«MAISON BAYARD» street Bayard 75 016 PARIS
NOVAL	M.O.E: AIA Management	Architect: Axel Schoenert	Date: 2021
	Facade builder: METS	Description and quantity:	37 motorization of sliding folding shutter

Credit: Noval

OEM (ORIGINAL EQUIPMENT MANUFACTURER)

P86 MOTORISATION FOR SLIDING WINDOWS
(for Vitrocsa)

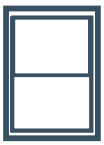

P86 MOTORISATION FOR SASH WINDOWS
(for Vitrocsa)

P87 MOTORISATION OF SWIMMING POOL COVERS
(for Abrisud)

P87 FREE COOLING MODULES
FOR HEAT PUMP
(for Equilab /G.A)

P88 LUMÉAL MOTORISED SLIDING WINDOW
(for Technal)

P88 MOTORISATION FOR JALOUSIES JX (LOUVERED BLINDS)
(for Technal)

WHAT IS AN OEM (ORIGINAL EQUIPMENT MANUFACTURER)?

An OEM manufacturer is a company that produces spare parts or systems on behalf of another company, which integrates or assembles them in its own production workshop.

Noval has been able to design and industrialise solutions integrating their various products for many prestigious customers.

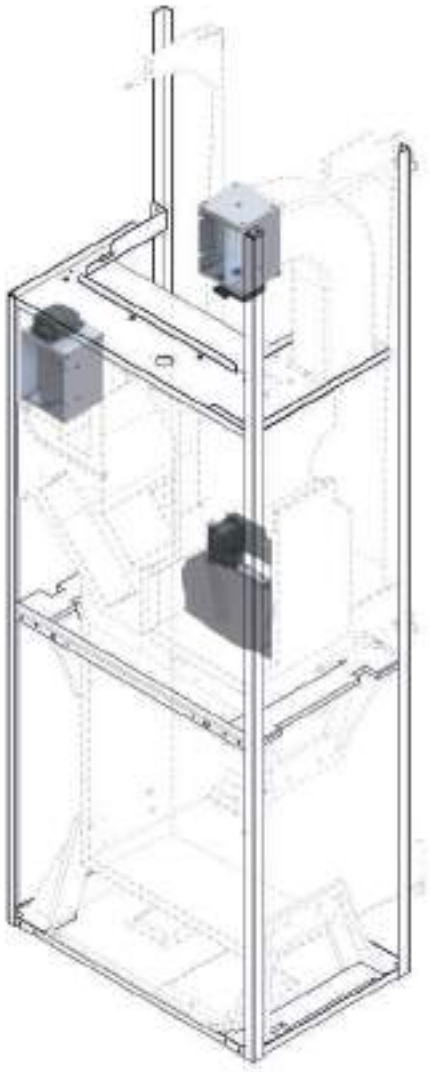

EXPERIENCE AND SKILL OF NOVAL IN OWN BRANDS

NOVAL's expertise and the design and production quality of its solutions have made it possible to develop strong synergies with major players in the construction sector, with recognised brands in interior and exterior fittings, and home automation, such as Technal, Somfy, Torbel, Equilab, Vitrocsa, Righini and Abrisud.

We design custom-built products at objective costs, which we sell as own brands. These products are integrated in line with your needs.

Below are a few examples of these OEM products; contact us for a specific modification of these products or to develop a future project.

MOTORISATION FOR SLIDING WINDOWS

NOVAL developed a motorisation system for the Vitrocsa TH+ and V56 range of sliding windows. Fully integrated inside the joinery, the motorisation kit can automatically operate windows up to 18m² and 1500kg in complex configurations. “NOVAL supported us to define the motorisation specifications until it was placed on the market. The system developed is robust and compatible with all the operating and home automation systems our customers have,” says Vanessa Buffat, technical director of Vitrocsa.

MOTORISATION FOR SASH WINDOWS

By extending the motorisation range to vertical sash windows, NOVAL brought greater flexibility to the use of the motorised system: management of acceleration and deceleration, multiple leaves, management of personal safety, compatibility for home automation operation. In addition, the programming philosophy is identical to the conventional sliding system already well-known to installers.

vitrocsa.ch

MOTORISATION OF SLIDING SWIMMING POOL COVERS

ABRISUD, European number 1, offers all solutions for covering a swimming pool and making it safe: flat, low and high residential covers, but also stretched shutters and covers. ABRISUD relied on the NOVAL teams to develop the only motorised cover with modules all the same width. The motor drive system pulls the modules along and then stacks them at the end of the pool to save space. A real success story with more than 10,000 motorised covers sold since 2006.

www.abrisud.com

FREE COOLING MODULE FOR HEAT PUMP

As a constructor and promoter, GA relies upon a strong industrial approach to offer smart, designer, connected solutions to deliver modern and intelligent buildings. Equilab, a subsidiary of GA, chose NOVAL to design and carry out full-scale manufacture of units to cool the building during the night, all at target cost.

www.ga.fr

LUMÉAL MOTORISED SLIDING WINDOW

With the aim of making motorisation in our joinery more accessible, Technal called upon Noval to produce a motorisation kit for the Lumeal range. For this small window, the size of the technical components of the motor drive to be integrated needed to be reduced. To do so, an innovative drive solution was developed to make the technical components as discreet as possible.

MOTORISATION FOR JALOUSIES JX (LOUVERED BLINDS)

Noval developed a compact motor drive to be integrated inside the profile of the Technal Jalousie JX. The box contains the motor, drive and operating electronics in a very restricted space. The box was designed for the specific environment of the joinery and is compatible with Centralised Technical Management operating systems (information feedback, locking).

www.technal.com

NOTES

NOTES

NOVAL
HOME AUTOMATION

www.noval-home.com

NOVAL

23, Voie Hemera - ZI Lavigne
31190 Auterive, FRANCE

Phone: +33 (0)5 34 47 00 09
Fax: +33 (0)5 34 47 71 87

Email: info.home@noval-france.com