MarineSeries

Item No. _____

Project _____

Quantity _____

Electric, Fryer [Counter, Cabinet, Range-Match] Model: 130F[M,BASE-M]



Model 130F-BASE-M shown with optional legs

130FM MARINE SHORT/BID SPECIFICATION

Fryer shall be a **LANG Manufacturing Marine Model 130F**, a 15" wide counter top electric heated unit with 30-lb. shortening capacity and 68 lbs/hr frozen fries production capacity; two half-size baskets with manual basket lifts; all stainless steel tank and exterior; SOLAS compliant safety test & shutdown system.

MARINE PRODUCT WARRANTY

One year, parts & labor. (Labor in U.S. only)
Fry pot is guaranteed to never leak.

MARINE CONSTRUCTION FEATURES

- One piece heavy duty 430 Series stainless steel exterior, with attractive No. 4 finish
- Enclosed cabinet base with door (range and floor models only)
- Stainless steel fry kettle
- 12 kW combined [18 kW on 380 V) low watt density heating elements
- Two frying baskets with manual basket lift system
- Front mounted oil drain ball valve
- Optional 4" adjustable bolt down legs on counter model. Optional 6" adjustable bolt down legs on floor and range model

PERFORMANCE FEATURES

- Hatchable design allows movement through 26" X 66" watertight hatch
- 68 lbs./hr of frozen fries production, in a space saving 15" wide unit
- Kettle and element "cool zone" eliminate carbon build-up
- Low watt density heating elements provide even heating and extend shortening life
- Heating elements hinge up and out of kettle for easy cleaning
- Enclosed cabinet base provides added storage (range and floor models only)
- R-28SM Model provides an attractive, integrated battery look with Lang 36" Marine Ranges

CONTROL PACKAGE

- Power ON-OFF switch
- 100 to 400˚F Thermostat
- SOLAS compliant safety test & shutdown system
- POWER, HEAT & OVER-TEMP indicator lights

PERFORMANCE GUIDE

Power Input	12-kW
Shortening Capacity	30 lbs.
Preheat Time [to 350˚F]	7 minutes
Frozen Fries Production	68 lbs./hr

HATCHABLE

NSF MARINE UL LISTED

LANG MANUFACTURING • 265 Hobson Street, Smithville, TN 37166
PHONE: 314-678-6315 • FAX: 314-781-3636 •
www.langworld.com

Electric, Fryer [Counter, Cabinet, Range-Match] Model: 130F[M,BASE-M]

MARINE INSTALLATION REQUIREMENTS

- Ⓔ Single 208V or 240V, 3-phase, or optional 380V, 440V, or 480V, 3-phase electrical connection
- Consult marine codes for installation requirements
- 130FM: Power connection from rear

MARINE OPTIONS & ACCESSORIES [All models unless indicated]

- ❑ Full-size basket
- ❑ Additional half-size baskets [two provided]
- ❑ 4" legs with adjustable bolt-down flanges
- ❑ 6" adjustable flanged bolt down legs
- ❑ Stainless steel smother cover
- ❑ Quick disconnect grease drain pipe

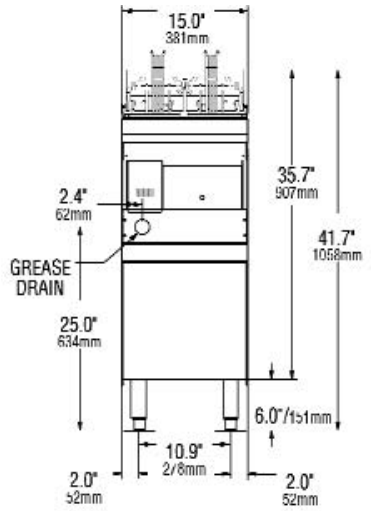

[Front View/Elevation]

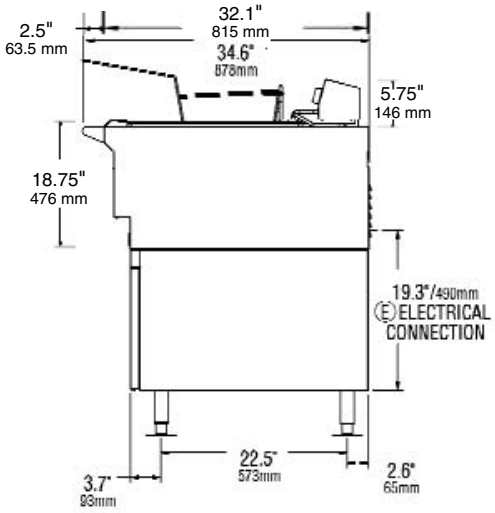

Shown with optional legs

[Right Side View]

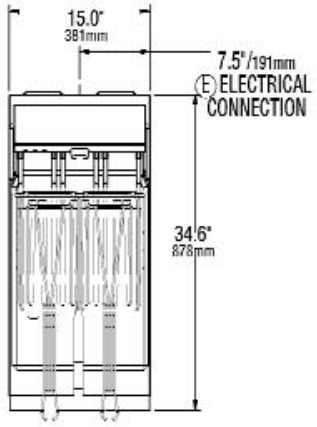

[Top View/Plan]

Model	Height x Width x Depth (Not including legs)	Clearance from combustible surface	Weight		Freight Class
			Actual	Shipping	
130FM	20.6" x 15.0" x 34.6" 524mm x 381mm x 878mm	Sides: 0" Back: 0"	70 lbs. 32 kg	120 lbs. 55 kg	85

Model	Volts AC - Hz	Total kW	Amps - Three Phase	Amps - Single Phase
130FM	208 - 50/60	12.0	33.3	N/A
	240 - 50/60	12.0	28.9	N/A
	380 - 50/60	18.0	18.3	N/A
	480 - 50/60	12.0	14.4	N/A

LANG MANUFACTURING • 265 Hobson Street, Smithville, TN 37166
PHONE: 314-678-6315 • FAX: 314-781-3636 •
www.langworld.com