Combo
CVJ-PRO-76-1-1-S

80 dinners

Charcoal oven and open grill

The perfect combination A combination of a charcoal oven and an open grill, blending the precision of the oven with the authenticity of the traditional grill. Maximum versatility in a single device.



Included accessories CVJ-PRO-76-1-1-S



Tongs x2	Poker	Brush	Grill PVJ	Grill HJX
Ref. 0423	Ref. 0427	Ref. 8224	Ref. 270115	Ref. 240024

All Josper products work exclusively with charcoal. The NSF certification refers to the equipment and not to the accessories described in this document

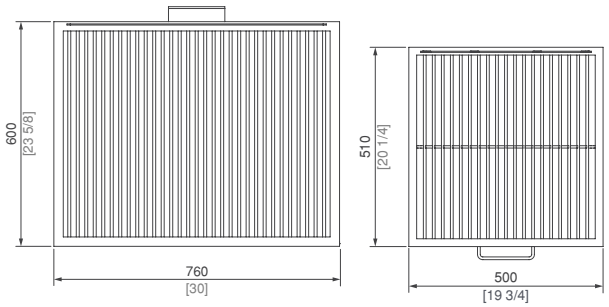

Specifications

	HJX-PRO-S80	PVJ-76-1-1-MB
Recommended for ± (dinners)	80	--
Grill stroke	--	290 mm / 11 1/2 in
Braising area	500 x 510 mm x1 / 19 3/4 x 20 1/4 in x1	760 x 600 mm / 30 x 23 5/8 in
Fire up time	30 min aprox / average	20 min aprox / average
Charcoal daily consumtion	5 a 7 kg / 11 to 15.43 lb	9 a 11 kg / 19.8 to 24.2 lb
Broiling temperature	250 a 350 ºC / 482 to 662 ºF	250 ºC / 482 ºF
Grill rack capacity in GN trays	1xGN1/1	--
Flue gas mass flow	15.39 g/s / 0.54 oz/s	--
Exhaust rate	2800 m³/h	2500 m³/h
Net weight	364.9 kg / 804.5 lb	340 kg / 749.57 lb

+34 93 767 15 16
info@jospergrill.com
jospergrill.com

Combo
CVJ-PRO-76-1-1-S

Equipment Installation

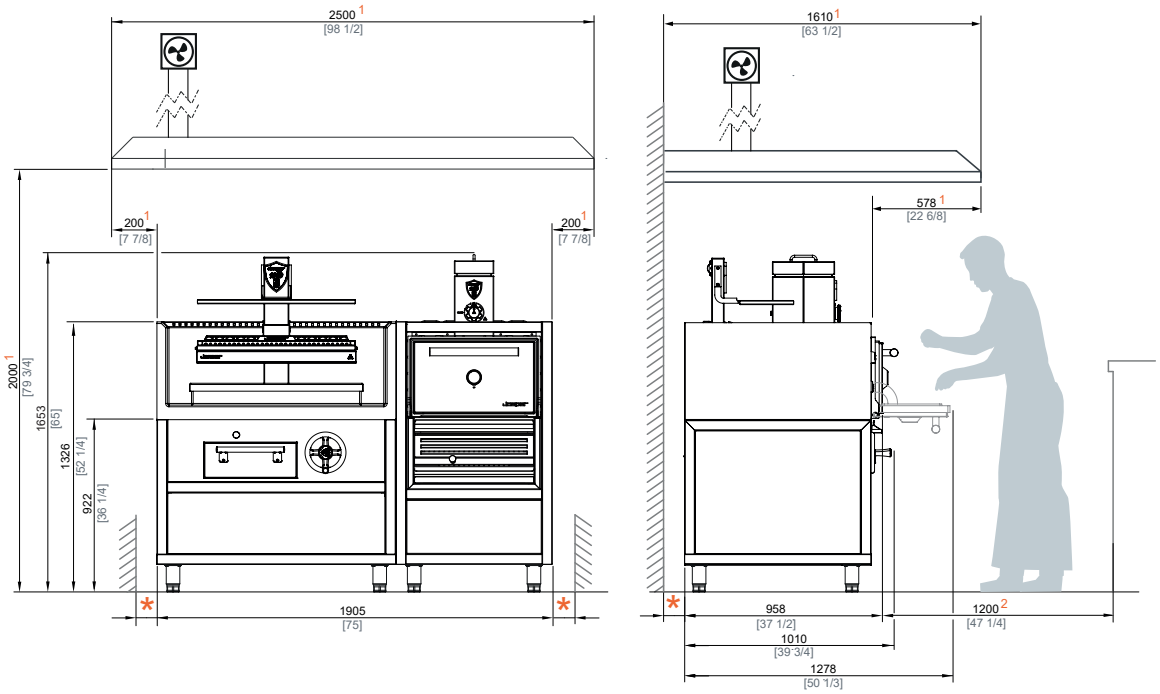

* Minumum distance to flammable elements 12 in 300 mm
Minimum distance to non-flammables elements 4 in 100 mm

1 Recommended hood's minimum dimensions
2 Recommended chef's working space







Ed.0513 - Josper reserves the right to make modifications to catalogues, pricelists and promotional material according to the development and improvements applied to its equipment.

+34 93 767 15 16
info@jospergrill.com
jospergrill.com