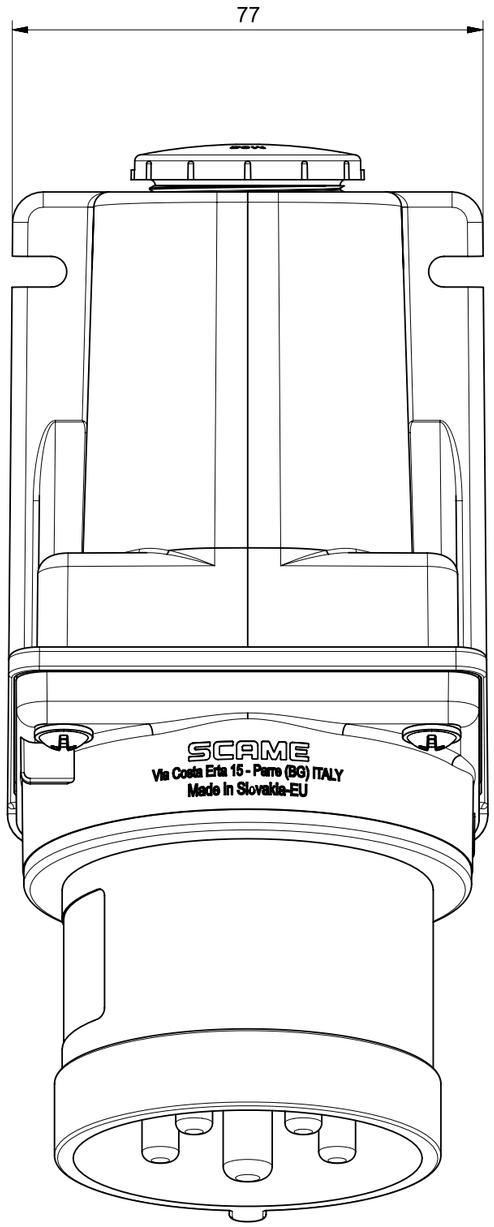

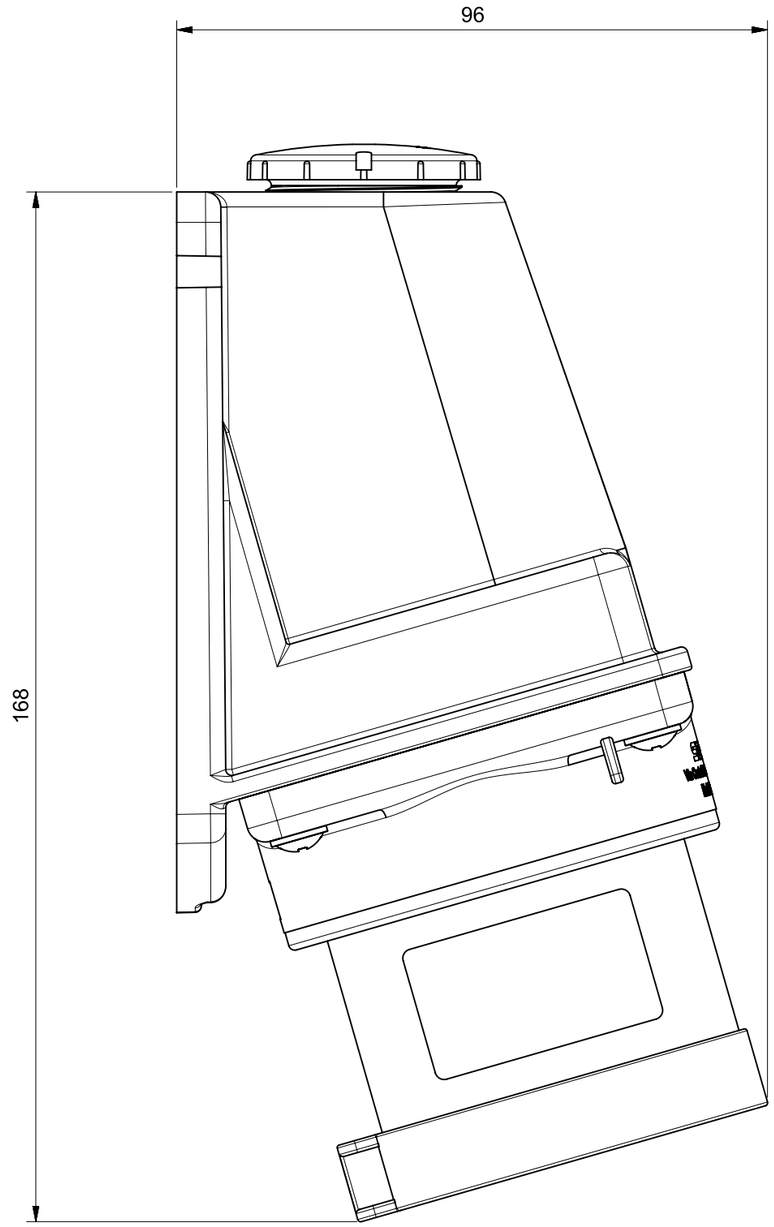

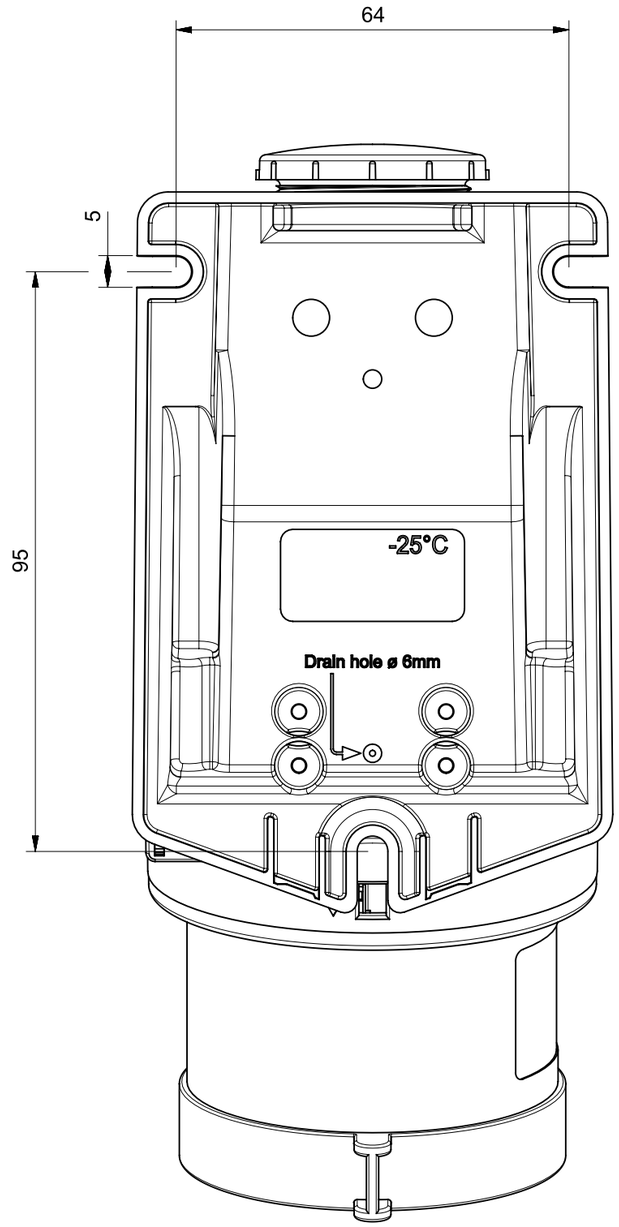

IL DISEGNO SI RIFERISCE ALLA POSIZIONE 6H

THE DWG REFERS TO CLOCK POSITION 6H

At the end of the law, we reserve the ownership of this design may not be copied and transfer it to third parties or competitors	Format	A3	Scale	1:1	Mould N°	1000XXXX	Drawn	SCAME
	Tolerances for linear and angular dimensions without indication of specific tolerances: JS13 / UNI 286-1:2010						Date	gg-mm-aaaa
							Approved	
SCAME S.p.A. PARRE - (Bergamo)	DESCRIPTION						CODICE	Sheet 1 / 1
	SPINA FISSA DA PARETE 3P+N+T 32A IP44 REVERSE						4008265	