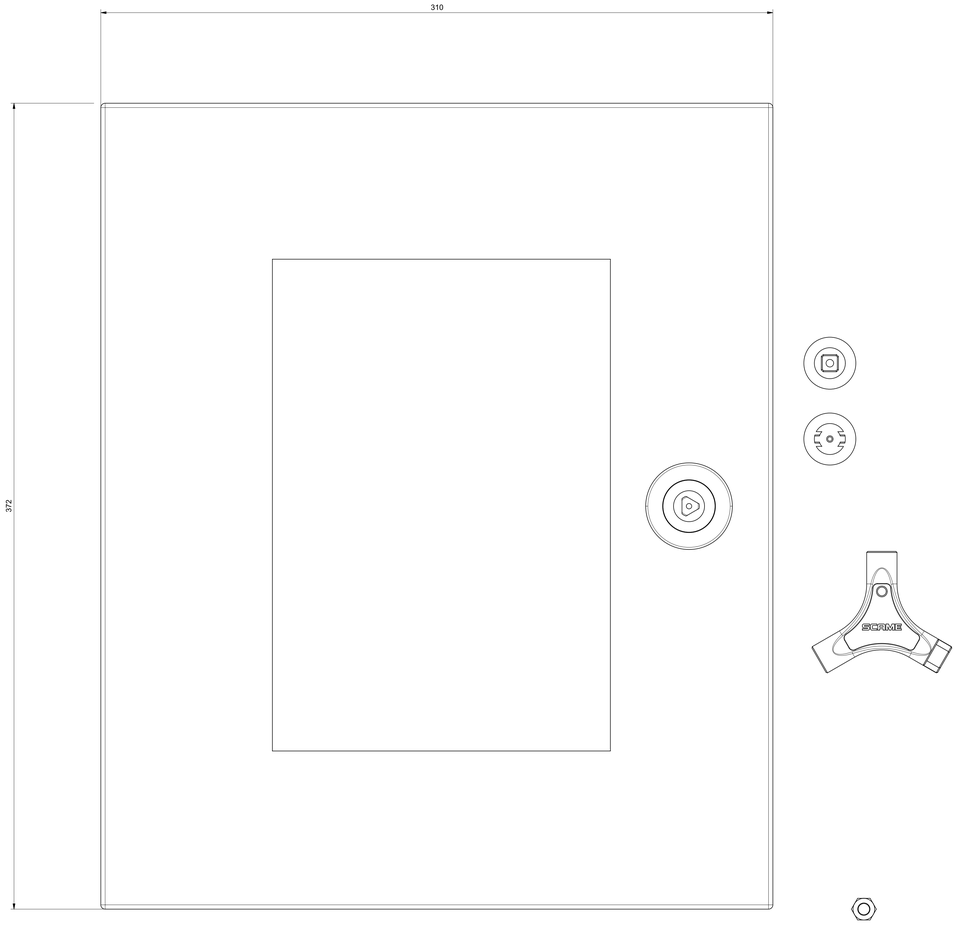

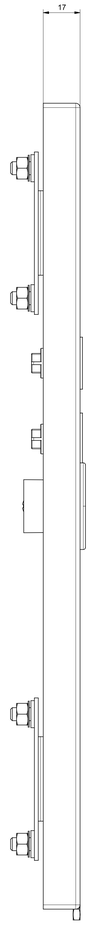

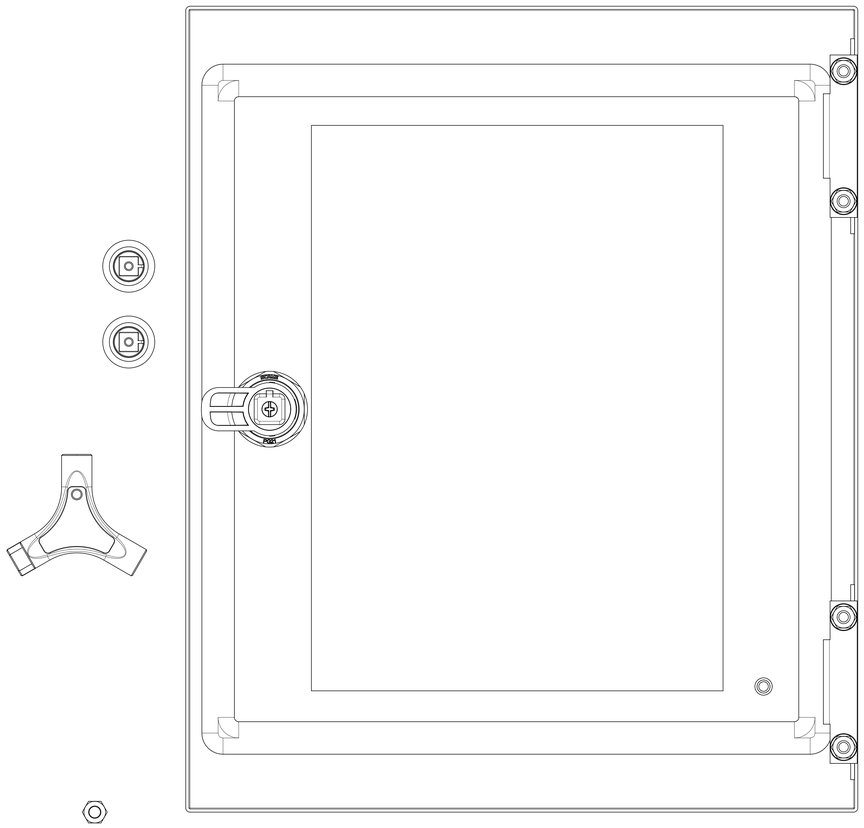

At the end of the law, we reserve the ownership of this design may not be copied and transfer it to third parties or competitors	Format	A0	Scale	1:1	Mould N°	1000XXXX	Drawn	SCAME
	Tolerances for linear and angular dimensions without indication of specific tolerances: JS13 / UNI 286-1:2010						Date	gg-mm-aaaa
							Approved	
SCAME S.p.A. PARRE - (Bergamo)	DESCRIPTION						CODE	Sheet 1 / 1
	PORTA CON OBLO' EASYBOX METALLO MIS 1						4005052	