A

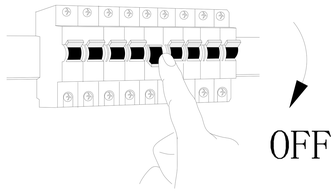

B

Art.-Nr.	Dimension(mm) (L*W*H)	Weight (kgs)	Mounting height(m)	Wind Catching area(m²)
66219/66224	735*120*170	1.8	≤5	0.010
66326/66328	740*135*175	2	≤5	0.012
66331/66333	760*180*220	2.5	≤5	0.024

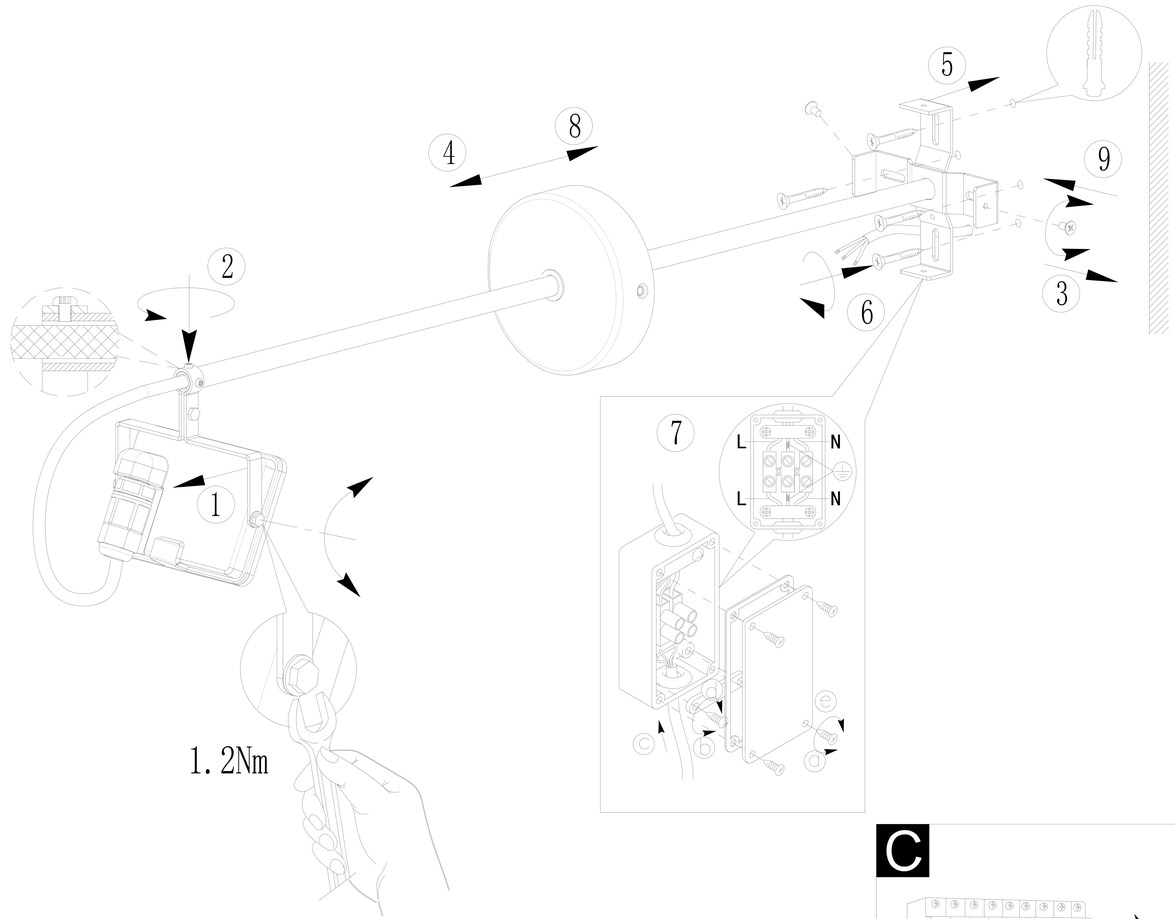

C

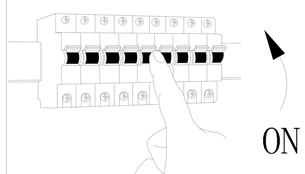

BLA66219
www.eglo.com