MAYTONI
DECORATIVE LIGHTING

Pendant Lamp Vesper

Series: Vesper Article: MOD108PL-18GB

PROPERTIES

Lamp type: ..... Pendant Lamp
Min Height, mm: 815
Max Height, mm: 815
Bulbs: ..... (40W)
Diameter, mm: 1030
Ceiling mount type: ..... Plank

PLAFOND / LAMPSHADE

Lampshade Colour: ..... Black
Shade Material: ..... Metal

ADDITIONAL
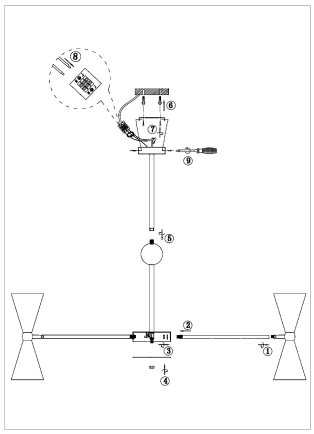
Base material: ..... Metal
2in1: ..... No
LED: ..... No
Bulbs incl.: ..... No
Barcode: 4251110051451
IP: IP20
Package volume, m3: 0.1134
Net weight, kg: 7.6
Warranty: 2