MAYTONI
DECORATIVE LIGHTING

Wall Lamp Aster

Series: Aster Article: MOD007WL-01G

PROPERTIES

Lamp type: ..... Wall Lamp
Bulbs: ..... (40W)
Diameter, mm: 280
Ceiling mount type: ..... Plank
Chain length, mm: 435

PLAFOND / LAMPSHADE

Shade Material: ..... Glass

ADDITIONAL
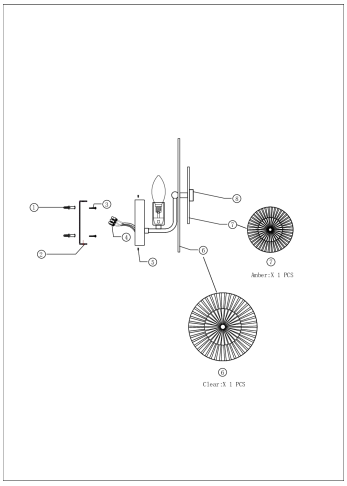
Width, mm: 153
Base material: ..... Metal
2in1: ..... No
LED: ..... No
Bulbs incl.: ..... No
Barcode: 4251110027890
IP: IP20
Net weight, kg: 2