MAYTONI
DECORATIVE LIGHTING

Wall Lamp Riverside

Series: Riverside Article: MOD018WL-01CH

PROPERTIES

Lamp type: ..... Wall Lamp
Min Height, mm: 300
Max Height, mm: 300
Bulbs: ..... (40W)

PLAFOND / LAMPSHADE

Lampshade Colour: ..... White
Shade Material: ..... Fabric on PVC
Mount type: ..... On socket

ADDITIONAL
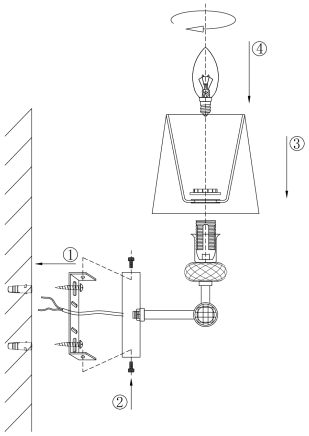
Width, mm: 150
Base material: ..... Metal
2in1: ..... No
LED: ..... No
Length, mm: 190
Bulbs incl.: ..... No
Barcode: 4251110051949
IP: IP20
Package volume, m3: 0.0126
Net weight, kg: 0.61
Place type: ..... Ballroom
Warranty: 2