Fişă tehnică | Număr articol: 231-2702/037-000

2-conductor female connector; Locking lever; 2.5 mm²; Pin spacing 7.62 mm; 2-pole; 2,50 mm²; orange

www.wago.com/231-2702/037-000

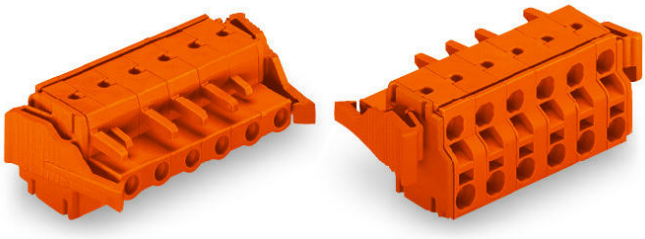

RoHS ✓ Compliant

BOMcheck.net

Culoare:

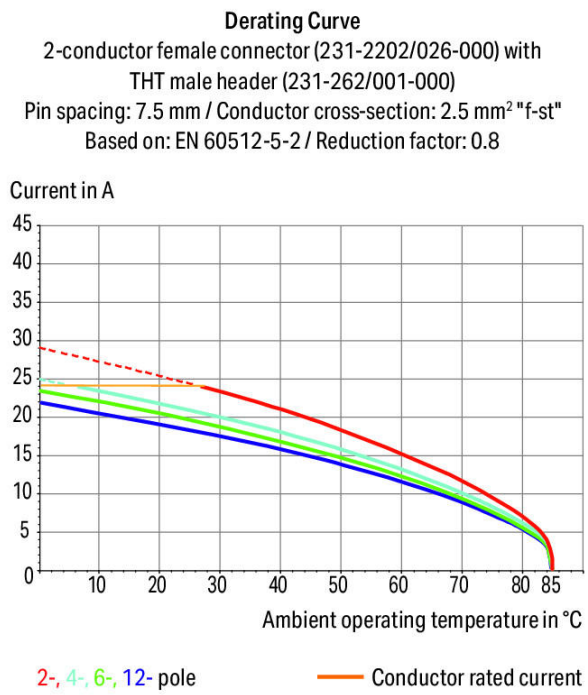

Supus modificărilor.

WAGO Kontakttechnik GmbH & Co. KG
/Representative Office Romania
Sos. Pipera-Tunari nr. 1/1
building 1, 2nd floor | 077190 Voluntari, Ilfov
Tel.: +40-(0)31 421 85 68 | Email: info-RO@wago.com

Aveţi întrebări despre produsele noastre?
Vă stăm la dispoziţie pentru preluarea apelului la +40 (0) 31 421 85 68.

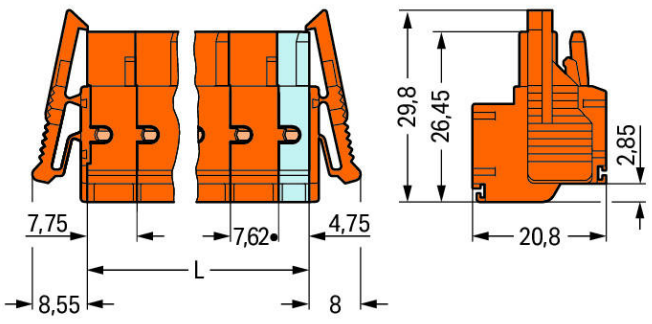

L = (pole no. – 2) x pin spacing + 12.5 mm

2- to 3-pole female connectors – one latch only

Descriere articol

- Universal connection for all conductor types
- Two conductor entries per pole
- For looping through power or data buses
- Bus connection is retained, even when unmated
- Push-in termination of solid and ferruled conductors
- With coding fingers

Safety information 1:
The *MULTI CONNECTION SYSTEM (MCS)* is designed without breaking capacity for compliance with DIN EN 61984. When used as intended, MCS Connectors shall not be connected/disconnected when live or under load. The circuit design should ensure header pins, which can be touched, are not live when unmated.

Date
Electrical data

Ratings per IEC/EN 60664-1

Ratings per	IEC/EN 60664-1
Nominal voltage (III/3)	500 V

Supus modificărilor.

WAGO Kontakttechnik GmbH & Co. KG
/Representative Office Romania
Sos. Pipera-Tunari nr. 1/1
building 1, 2nd floor | 077190 Voluntari, Ilfov
Tel.: +40-(0)31 421 85 68 | Email: info-RO@wago.com

Aveţi întrebări despre produsele noastre?
Vă stăm la dispoziţie pentru preluarea apelului la +40 (0) 31 421 85 68.

Rated surge voltage (III/3)	6 kV
Rated voltage (III/2)	630 V
Rated surge voltage (III/2)	6 kV
Nominal voltage (II/2)	1000 V
Rated surge voltage (II/2)	6 kV
Rated current	16 A
Legend (ratings)	(III / 2) ≙ Overvoltage category III / Pollution degree 2

Approvals per UL 1059

Rated voltage UL (Use Group B)	300 V
Rated current UL (Use Group B)	20 A
Rated voltage UL (Use Group D)	300 V
Rated current UL (Use Group D)	10 A
Approvals per	UL 1059

Approvals per UL 1977

Rated voltage UL 1977	600 V
Rated current UL 1977	20 A

Approvals per CSA

Rated voltage CSA (Use Group B)	300 V
Rated current CSA (Use Group B)	15 A
Rated voltage CSA (Use Group D)	300 V
Rated current CSA (Use Group D)	10 A

Connection data

Connection technology	Push-in CAGE CLAMP®
Actuation type	Operating tool
Solid conductor	0.2 … 2.5 mm² / 24 … 12 AWG
Fine-stranded conductor	0.2 … 2.5 mm² / 24 … 12 AWG
Fine-stranded conductor; with insulated ferrule	0.25 … 1.5 mm²
Fine-stranded conductor; with uninsulated ferrule	0.25 … 2.5 mm²
Strip length	9 … 10 mm / 0.35 … 0.39 inch
Pole No.	2
Total number of connection points	4
Total number of potentials	2

Supus modificărilor.

WAGO Kontakttechnik GmbH & Co. KG
/Representative Office Romania
Sos. Pipera-Tunari nr. 1/1
building 1, 2nd floor | 077190 Voluntari, Ilfov
Tel.: +40-(0)31 421 85 68 | Email: info-RO@wago.com

Aveţi întrebări despre produsele noastre?
Vă stăm la dispoziţie pentru preluarea apelului la +40 (0) 31 421 85 68.

Number of connection types	1
Number of levels	1
Conductor entry direction to mating direction	0 °

Geometrical Data

Pin spacing	7.62 mm / 0.3 inch
Width	29.5 mm / 1.161 inch
Height	20.8 mm / 0.819 inch
Depth	29.8 mm / 1.173 inch

Plug connection

Contact type (pluggable connector)	Female connector/socket
Connector (connection type)	for conductors
Mismating protection	No
Locking of plug-in connection	locking lever

Material Data

Color	orange
Material group	I
Insulation material	Polyamide 66 (PA 66)
Flammability class per UL94	V0
Clamping spring material	Chrome nickel spring steel (CrNi)
Contact material	Copper alloy
Contact plating	tin-plated
Fire load	0,141 MJ
Weight	6,7 g

Environmental Requirements

Limit temperature range	-60 … +85 °C

Commercial data

Product Group	3 (Multi Conn. System)
Packaging type	BOX
Country of origin	PL
GTIN	4044918564366
Customs tariff number	85366990990

Supus modificărilor.

WAGO Kontakttechnik GmbH & Co. KG
/Representative Office Romania
Sos. Pipera-Tunari nr. 1/1
building 1, 2nd floor | 077190 Voluntari, Ilfov
Tel.: +40-(0)31 421 85 68 | Email: info-RO@wago.com

Aveţi întrebări despre produsele noastre?
Vă stăm la dispoziţie pentru preluarea apelului la +40 (0) 31 421 85 68.

Aprobări / certificate

Ship Approvals

Emblemă	Aprobare	Text de aprobare suplimentar	Nume certificat
	ABS American Bureau of Shipping	-	19-HG1869876-PDA

UL-Approvals

Emblemă	Aprobare	Text de aprobare suplimentar	Nume certificat
	UL UL International Germany GmbH	UL 1977	E45171
	UL UL International Germany GmbH	UL 1059	20160630-E45172

Counterpart

Nr. articol731-632
1-conductor male connector; 2.5 mm²; Pin spacing 7.62 mm; 2-pole; 2,50 mm²; orange
www.wago.com/731-632

Nr. articol231-732/001-000
THT male header; 1.0 x 1.0 mm solder pin; straight; Pin spacing 7.62 mm; 2-pole; orange
www.wago.com/231-732/001-000

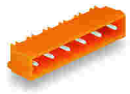

Nr. articol231-932/001-000
THT male header; 1.0 x 1.0 mm solder pin; angled; Pin spacing 7.62 mm; 2-pole; orange
www.wago.com/231-932/001-000

Produse compatibile

ferrule

Supus modificărilor.

WAGO Kontakttechnik GmbH & Co. KG
/Representative Office Romania
Sos. Pipera-Tunari nr. 1/1
building 1, 2nd floor | 077190 Voluntari, Ilfov
Tel.: +40-(0)31 421 85 68 | Email: info-RO@wago.com

Aveţi întrebări despre produsele noastre?
Vă stăm la dispoziţie pentru preluarea apelului la +40 (0) 31 421 85 68.

	Nr. articol: 216-101 Ferrule; Sleeve for 0.5 mm² / AWG 22; uninsulated; electro-tin plated	www.wago.com/216-101
	Nr. articol: 216-102 Ferrule; Sleeve for 0.75 mm² / AWG 20; uninsulated; electro-tin plated	www.wago.com/216-102
	Nr. articol: 216-103 Ferrule; Sleeve for 1 mm² / AWG 18; uninsulated; electro-tin plated	www.wago.com/216-103
	Nr. articol: 216-104 Ferrule; Sleeve for 1.5 mm² / AWG 16; uninsulated; electro-tin plated	www.wago.com/216-104
	Nr. articol: 216-106 Ferrule; Sleeve for 2.5 mm² / AWG 14; uninsulated; electro-tin plated	www.wago.com/216-106
	Nr. articol: 216-121 Ferrule; Sleeve for 0.5 mm² / AWG 22; uninsulated; electro-tin plated	www.wago.com/216-121
	Nr. articol: 216-122 Ferrule; Sleeve for 0.75 mm² / AWG 20; uninsulated; electro-tin plated	www.wago.com/216-122
	Nr. articol: 216-123 Ferrule; Sleeve for 1 mm² / AWG 18; uninsulated; electro-tin plated	www.wago.com/216-123
	Nr. articol: 216-124 Ferrule; Sleeve for 1.5 mm² / AWG 16; uninsulated; electro-tin plated	www.wago.com/216-124
	Nr. articol: 216-131 Ferrule; Sleeve for 0.25 mm² / AWG 24; uninsulated; electro-tin plated	www.wago.com/216-131
	Nr. articol: 216-132 Ferrule; Sleeve for 0.34 mm² / AWG 24; uninsulated; electro-tin plated	www.wago.com/216-132
	Nr. articol: 216-141 Ferrule; Sleeve for 0.5 mm² / 20 AWG; uninsulated; electro-tin plated; electrolytic copper; gastight crimped; acc. to DIN 46228, Part 1/08.92	www.wago.com/216-141
	Nr. articol: 216-142 Ferrule; Sleeve for 0.75 mm² / 18 AWG; uninsulated; electro-tin plated; electrolytic copper; gastight crimped; acc. to DIN 46228, Part 1/08.92	www.wago.com/216-142
	Nr. articol: 216-143 Ferrule; Sleeve for 1 mm² / AWG 18; uninsulated; electro-tin plated; electrolytic copper; gastight crimped; acc. to DIN 46228, Part 1/08.92	www.wago.com/216-143
	Nr. articol: 216-144 Ferrule; Sleeve for 1.5 mm² / AWG 16; uninsulated; electro-tin plated; electrolytic copper; gastight crimped; acc. to DIN 46228, Part 1/08.92	www.wago.com/216-144
	Nr. articol: 216-151 Ferrule; Sleeve for 0.25 mm² / AWG 24; uninsulated; electro-tin plated	www.wago.com/216-151
	Nr. articol: 216-152 Ferrule; Sleeve for 0.34 mm² / AWG 24; uninsulated; electro-tin plated	www.wago.com/216-152
	Nr. articol: 216-201 Ferrule; Sleeve for 0.5 mm² / 20 AWG; insulated; electro-tin plated; white	www.wago.com/216-201

Supus modificărilor.

WAGO Kontakttechnik GmbH & Co. KG
/Representative Office Romania
Sos. Pipera-Tunari nr. 1/1
building 1, 2nd floor | 077190 Voluntari, Ilfov
Tel.: +40-(0)31 421 85 68 | Email: info-RO@wago.com

Aveţi întrebări despre produsele noastre?
Vă stăm la dispoziţie pentru preluarea apelului la +40 (0) 31 421 85 68.

	Nr. articol: 216-202 Ferrule; Sleeve for 0.75 mm² / 18 AWG; insulated; electro-tin plated; gray	www.wago.com/216-202
	Nr. articol: 216-203 Ferrule; Sleeve for 1 mm² / AWG 18; insulated; electro-tin plated; red	www.wago.com/216-203
	Nr. articol: 216-204 Ferrule; Sleeve for 1.5 mm² / AWG 16; insulated; electro-tin plated; black	www.wago.com/216-204
	Nr. articol: 216-221 Ferrule; Sleeve for 0.5 mm² / 20 AWG; insulated; electro-tin plated; white	www.wago.com/216-221
	Nr. articol: 216-222 Ferrule; Sleeve for 0.75 mm² / 18 AWG; insulated; electro-tin plated; gray	www.wago.com/216-222
	Nr. articol: 216-223 Ferrule; Sleeve for 1 mm² / AWG 18; insulated; electro-tin plated; red	www.wago.com/216-223
	Nr. articol: 216-224 Ferrule; Sleeve for 1.5 mm² / AWG 16; insulated; electro-tin plated; black	www.wago.com/216-224
	Nr. articol: 216-241 Ferrule; Sleeve for 0.5 mm² / 20 AWG; insulated; electro-tin plated; electrolytic copper; gastight crimped; acc. to DIN 46228, Part 4/09.90; white	www.wago.com/216-241
	Nr. articol: 216-242 Ferrule; Sleeve for 0.75 mm² / 18 AWG; insulated; electro-tin plated; electrolytic copper; gastight crimped; acc. to DIN 46228, Part 4/09.90; gray	www.wago.com/216-242
	Nr. articol: 216-243 Ferrule; Sleeve for 1 mm² / AWG 18; insulated; electro-tin plated; electrolytic copper; gastight crimped; acc. to DIN 46228, Part 4/09.90; red	www.wago.com/216-243
	Nr. articol: 216-244 Ferrule; Sleeve for 1.5 mm² / AWG 16; insulated; electro-tin plated; electrolytic copper; gastight crimped; acc. to DIN 46228, Part 4/09.90; black	www.wago.com/216-244
	Nr. articol: 216-262 Ferrule; Sleeve for 0.75 mm² / 18 AWG; insulated; electro-tin plated; electrolytic copper; gastight crimped; acc. to DIN 46228, Part 4/09.90; gray	www.wago.com/216-262
	Nr. articol: 216-263 Ferrule; Sleeve for 1 mm² / AWG 18; insulated; electro-tin plated; electrolytic copper; gastight crimped; acc. to DIN 46228, Part 4/09.90; red	www.wago.com/216-263
	Nr. articol: 216-264 Ferrule; Sleeve for 1.5 mm² / AWG 16; insulated; electro-tin plated; electrolytic copper; gastight crimped; acc. to DIN 46228, Part 4/09.90; black	www.wago.com/216-264
	Nr. articol: 216-284 Ferrule; Sleeve for 1.5 mm² / AWG 16; insulated; electro-tin plated; electrolytic copper; gastight crimped; acc. to DIN 46228, Part 4/09.90; black	www.wago.com/216-284
	Nr. articol: 216-301 Ferrule; Sleeve for 0.25 mm² / AWG 24; insulated; electro-tin plated; yellow	www.wago.com/216-301

Supus modificărilor.

WAGO Kontakttechnik GmbH & Co. KG
/Representative Office Romania
Sos. Pipera-Tunari nr. 1/1
building 1, 2nd floor | 077190 Voluntari, Ilfov
Tel.: +40-(0)31 421 85 68 | Email: info-RO@wago.com

Aveţi întrebări despre produsele noastre?
Vă stăm la dispoziţie pentru preluarea apelului la +40 (0) 31 421 85 68.

	Nr. articol: 216-302 Ferrule; Sleeve for 0.34 mm² / 22 AWG; insulated; electro-tin plated; green	www.wago.com/216-302
	Nr. articol: 216-321 Ferrule; Sleeve for 0.25 mm² / AWG 24; insulated; electro-tin plated; yellow	www.wago.com/216-321
	Nr. articol: 216-322 Ferrule; Sleeve for 0.34 mm² / 22 AWG; insulated; electro-tin plated; green	www.wago.com/216-322
Insulation stop		
	Nr. articol: 231-673 Insulation stop; 0.08-0.2 mm² / 0.2 mm² “s”; white	www.wago.com/231-673
	Nr. articol: 231-674 Insulation stop; 0.25 - 0.5 mm²; light gray	www.wago.com/231-674
	Nr. articol: 231-675 Insulation stop; 0.75 - 1 mm²; dark gray	www.wago.com/231-675
check		
	Nr. articol: 231-662 Test plugs for female connectors; for 7.5 mm and 7.62 mm pin spacing; 2,50 mm²; light gray	www.wago.com/231-662
Marking accessories		
	Nr. articol: 210-331/762-202 Marking strips; as a DIN A4 sheet; MARKED; 1-16 (100x); Height of marker strip: 2.3 mm/0.091 in; Strip length 182 mm; Horizontal marking; Self-adhesive; white	www.wago.com/210-331/762-202
	Nr. articol: 210-332/762-020 Marking strips; as a DIN A4 sheet; MARKED; 1-20 (80x); Height of marker strip: 3 mm; Strip length 182 mm; Horizontal marking; Self-adhesive; white	www.wago.com/210-332/762-020
	Nr. articol: 210-833 Marking strips; on reel; 6 mm wide; plain; Self-adhesive; white	www.wago.com/210-833
	Nr. articol: 210-834 Marking strips; on reel; 5 mm wide; plain; Self-adhesive; white	www.wago.com/210-834
Strain relief plate		
	Nr. articol: 734-228 Strain relief plate; 12.5 mm wide; orange	www.wago.com/734-228

Descărcări

Documentation

Additional Information

Technical explanations	Apr 3, 2019	pdf 3,6 MB	Descărcare

Supus modificărilor.

WAGO Kontakttechnik GmbH & Co. KG
/Representative Office Romania
Sos. Pipera-Tunari nr. 1/1
building 1, 2nd floor | 077190 Voluntari, Ilfov
Tel.: +40-(0)31 421 85 68 | Email: info-RO@wago.com

Aveţi întrebări despre produsele noastre?
Vă stăm la dispoziţie pentru preluarea apelului la +40 (0) 31 421 85 68.

CAD/CAE-Data

CAD data

2D/3D Models 231-2702/037-000	URL	Descărcare

CAE data

EPLAN Data Portal 231-2702/037-000	URL	Descărcare

Installation Notes

Inserting a conductor

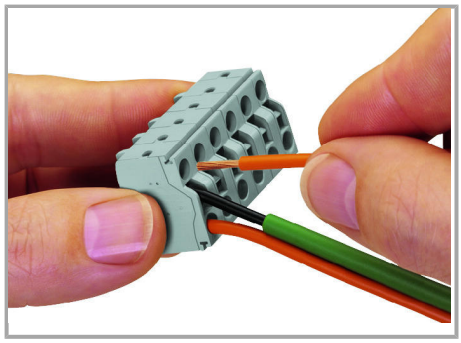

Operating Push-in CAGE CLAMP® is easy, fast and identical to that of CAGE CLAMP®. The screwdriver is fully inserted into the operating slot, holding Push-in CAGE CLAMP® open. After the conductor has been inserted into the clamping unit and the screwdriver been withdrawn, the conductor is clamped safely. Solid and fine-stranded conductors < 0.5 mm² (20 AWG) are terminated and removed using a screwdriver.

Inserting a conductor

Supus modificărilor.

WAGO Kontakttechnik GmbH & Co. KG
/Representative Office Romania
Sos. Pipera-Tunari nr. 1/1
building 1, 2nd floor | 077190 Voluntari, Ilfov
Tel.: +40-(0)31 421 85 68 | Email: info-RO@wago.com

Aveţi întrebări despre produsele noastre?
Vă stăm la dispoziţie pentru preluarea apelului la +40 (0) 31 421 85 68.

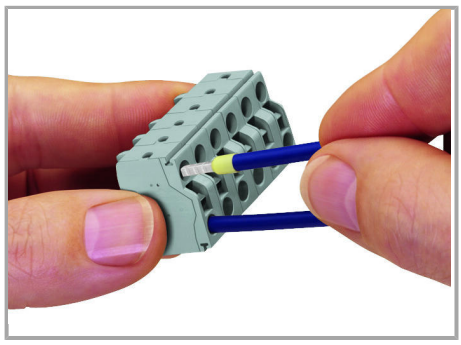

Solid conductors ≥ 0.5 mm² (20 AWG), as well as ferruled, fine-stranded conductors can be terminated by simply pushing them into unit. Integrated test ports allow touch contact with current bar via test probes in both horizontal and vertical directions.

Familie de produse

MCS MIDI Classic
Afişare globală produse din familie.

Supus modificărilor.

WAGO Kontakttechnik GmbH & Co. KG
/Representative Office Romania
Sos. Pipera-Tunari nr. 1/1
building 1, 2nd floor | 077190 Voluntari, Ilfov
Tel.: +40-(0)31 421 85 68 | Email: info-RO@wago.com

Aveţi întrebări despre produsele noastre?
Vă stăm la dispoziţie pentru preluarea apelului la +40 (0) 31 421 85 68.