FOR PE AND PVC PIPES

MOD. 8525
PN 16

PIPES DN 40-315
OUTLETS DN 3/4“ - 2“

Full collar type for PE/PVC pipes.



SPECIAL FEATURES

- Full collar type for use on plastic pipes (PE / PVC).
- Body high quality EPOXY powder coated (fusion bonded), coating thickness DFT min. 250 microns, zero porosity (tested with 3000V), high impact resistance and cross-linkage according to DIN 30677-2 and DIN 3476.
- Inside fully rubber lined with integral multiple O-ring sealing gasket at the outlet.
- Stud bolts for easy installation, fully corrosion-free.
- Threads according to EN 10226.

MATERIALS

Body:
Ductile iron EN-GJS-400-15 / EN 1563 (former to DIN GGG40)

Gasket:
Rubber, potable water approved

Stud/bolts/nuts/washers:
Stainless steel 1.4301 / EN ISO 10088 (correspondent to AISI304)

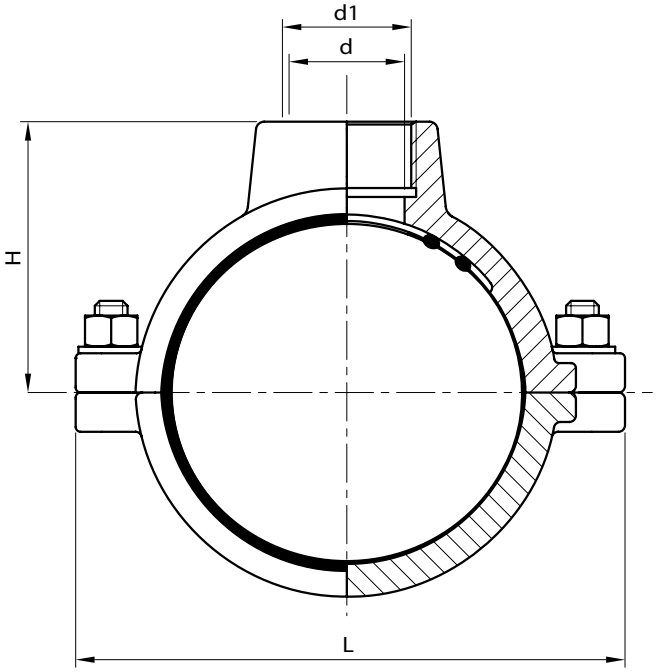

Ø	L	d					H					Weight (kg)				
		3/4"	1"	1"1/4	1"1/2	2"	3/4"	1"	1"1/4	1"1/2	2"	3/4"	1"	1"1/4	1"1/2	2"
40	98	24	28	-	-	-	42	42	-	-	-	0,8	0,8	-	-	-
50	124	24	28	40	-	-	56	56	56	-	-	1,2	1,2	1,2	-	-
63	124	40	40	40	40	40	62	62	62	68	68	2,1	2,1	2,1	2,6	2,45
75	135	40	40	40	40	40	68	68	68	73	73	2,6	2,6	2,5	2,85	2,7
90	150	40	40	40	50	50	75	75	75	80	80	2,7	2,7	2,65	3,1	2,95
110	170	40	40	40	50	50	85	85	85	90	90	3,6	3,6	3,5	3,8	3,65
125	192	-	40	40	50	50	-	93	93	93	98	-	4,25	4,1	4,4	4,3
140	208	-	40	40	50	50	-	100	100	106	106	-	5,25	5,2	5,5	5,4
160	230	-	40	40	50	50	-	111	111	116	116	-	7	6,95	7,15	7,05
180	262	-	31	40	45	50	-	125	125	127	127	-	6,5	6,5	7	6,5
200	282	-	40	40	50	50	-	137	137	137	137	-	9,9	9,8	10,1	10
225	310	-	31	40	45	50	-	150	150	150	150	-	11,6	11,6	11,6	11,6
250	347	-	31	40	45	50	-	165	165	165	165	-	12,2	12,2	12,2	12,2
280	356	-	-	-	-	50	-	-	-	-	180	-	-	-	-	12,4
315	405	-	-	-	-	50	-	-	-	-	200	-	-	-	-	15

All metal, rubber, and coatings used have been designed for contact with water for human consumption, pursuant to the terms of Italian Health Ministry decree n° 174, dated 6/4/2004.