AAA - 40F

CATALOGO PARTI RICAMBIO
SPARE PART LIST
CATALOGUE DE PIECE DETACHEES

Type:
- Turbine 3/20
- Turbine 3/20-100

Gearbox: - R 126

Optional: - VAS on trolley



10-2000

Rev: 017 - 08/2021

REMARKS

All information, illustration and data contained in this catalogue hare in only informative.
However, the IRRIMEC company reserves the right to make whatever modifications
at any time may be necessary for the improvement of our products without previous notice and
will be under no commitment to revise this publication.

INDICE DELLE TAVOLLE - LIST OF FIGURES - TABLE DES MATIERES

TAV.	INDICE DELLE TAVOLE	LIST OF FIGURES	TABLE DES MATIERES	PAG.
AAA 101	TELAIO	FRAME	CHASSIS	01
AAA 102	BOBINA	BOBINA	BOBINE	03
AAA 103	TRANCANAGE <05-2014	HOSEGUIDE MECHANISM <05/2014	TRANCANAGE <05/2014	05
AAA 103.11	TRANCANAGE MAGGIORATO >05/2014	HOSEGUIDE MECHANISM >05/2014	TRANCANAGE >05/2014	07
AAA 106	MECCANISMO TURBINA	TURBINE MECHANISM	MÉCANISME TURBINE	09
AAA 107	TURBINA 3/20	TURBINE 3/20	TURBINE 3/20	13
AAA 117	TURBINA 3/20-100	TURBINE 3/20-100	TURBINE 3/20-100	15
AAA 108	CARRELLO	TROLLEY	TRAÎNEAUX	17

TELAIO
FRAME
CHASSIS

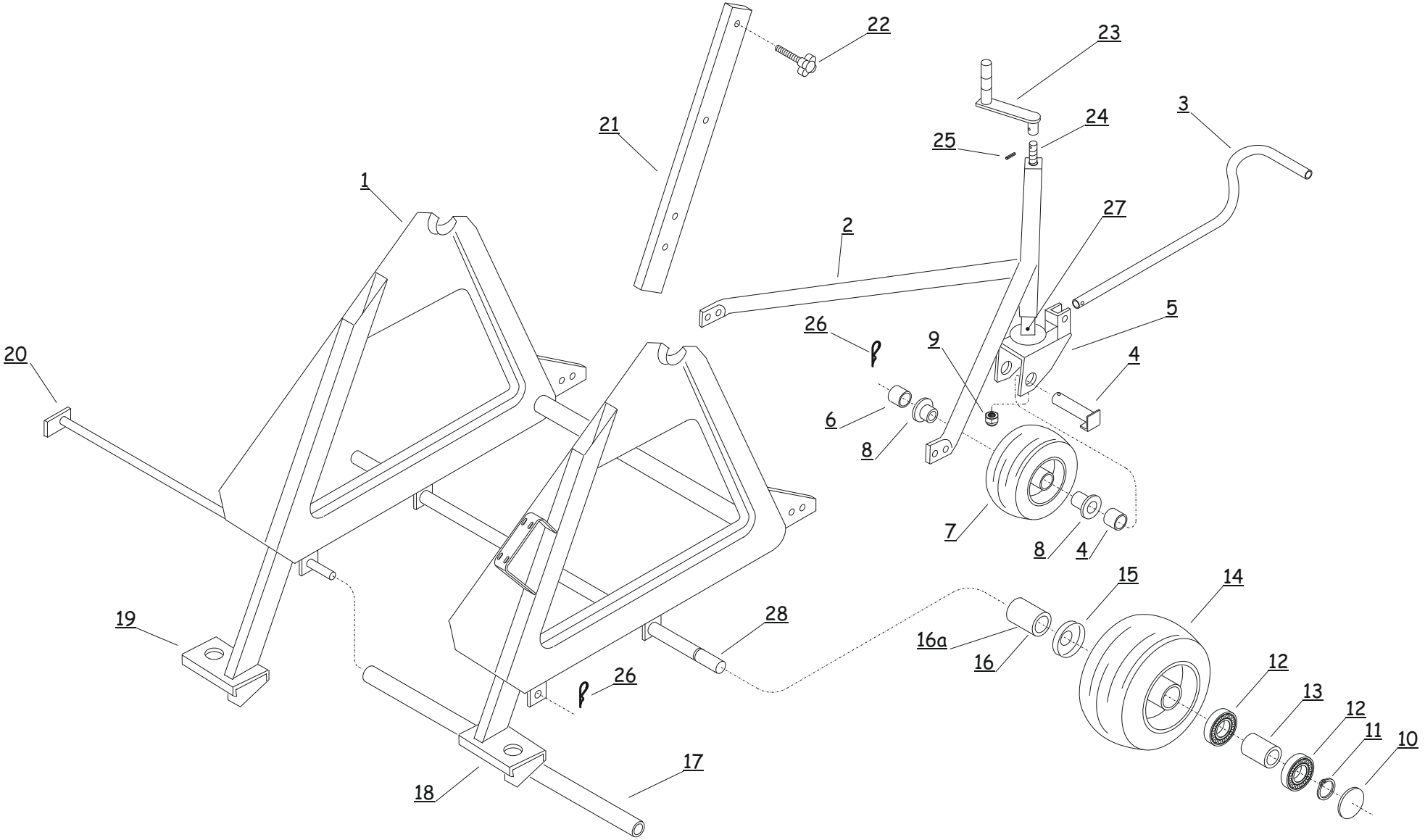

L T: Lato Turbina - LC: Lato Catena
TS: Turbine Side - CS: Chain Side
CT: Cote Turbine - CC: Cote Chaine

N.	COD.	DESCRIZIONE	DESCRIPTION	DENOMINATION	Q.
1	AAA 5400961	Montante completo	Complet support	Montant complet	1
2	AAA 5401941	Timone	Draw bar	Timon	1
3	AAA 5401966	Leva di traino	Tow lever	Barre de remorquage	1
4	AAA 5401910	Perno ruotina	Front wheel shaft	Axe de roue	1
5	AAA 5401967	Forcella ruotina	Wheel fork	Fourchette de roue	1
6		Distanziale	Spacer	Entretoise	2
7	001714	Ruotina	Front wheel	Roue	1
8		Boccola in plastica	Plastical ring	Bague plastique	2
9		Dado autobloccante M14	Nut M14 €	crou autoblocant M14	1
10		Coperchio	Cover	Couvercle	2
11		Anello di arresto €25	Stop ring €25	Circlip €25	2
12		Cuscinetto 6005 2RS	Bearing 6005 2RS	Roulement 6005 2RS	4
13	003672	Distanziale	Spacer	Entretoise	2
14		Ruota	Wheel	Roue	2
15		Parapolvere	Leap seal	Joint a levre	2
16		Distanziale L141	Spacer L141	Entretoise L141	1
16a		Distanziale L61	Spacer L61	Entretoise L61	1
17	05.025	Protezione rullo PET	PET protection	Protection PET	1
18	004881	Piede destro	Right foot	Pied droit	1
19	004881	Piede sinistro	Left foot	Pied gauche	1
20	AAA 5401912	Tubo supporto di protezione PET	PET protection support tube	Tube support de protection PET	1
21	AAA 5401929	Asta fissaggio carter	Rod	Tige	1
22	003522	Volantino mod.1015/F Ø30 M6×40	Ball grip mod.1015/F Ø30 M6×40	Bouton mod.1015/F Ø30 M6×40	1
23	001771/A	Manovella binda	Handle	Manivelle	1
24	003683	Vite di binda	Jack screw	Vis de cric	1
25		Spina elastica	Spring pin	Goupille fendue	1
26		Agri Ø4	Cotter pin Ø4	Goupille beta Ø4	2
27	AAA 5400943	Binda	Jack	Cric	1
28		Perno assale ruote Ø25	Pin for wheel Ø25	Axe roue Ø25	1

BOBINA
HOSE DRUM
BOBINE

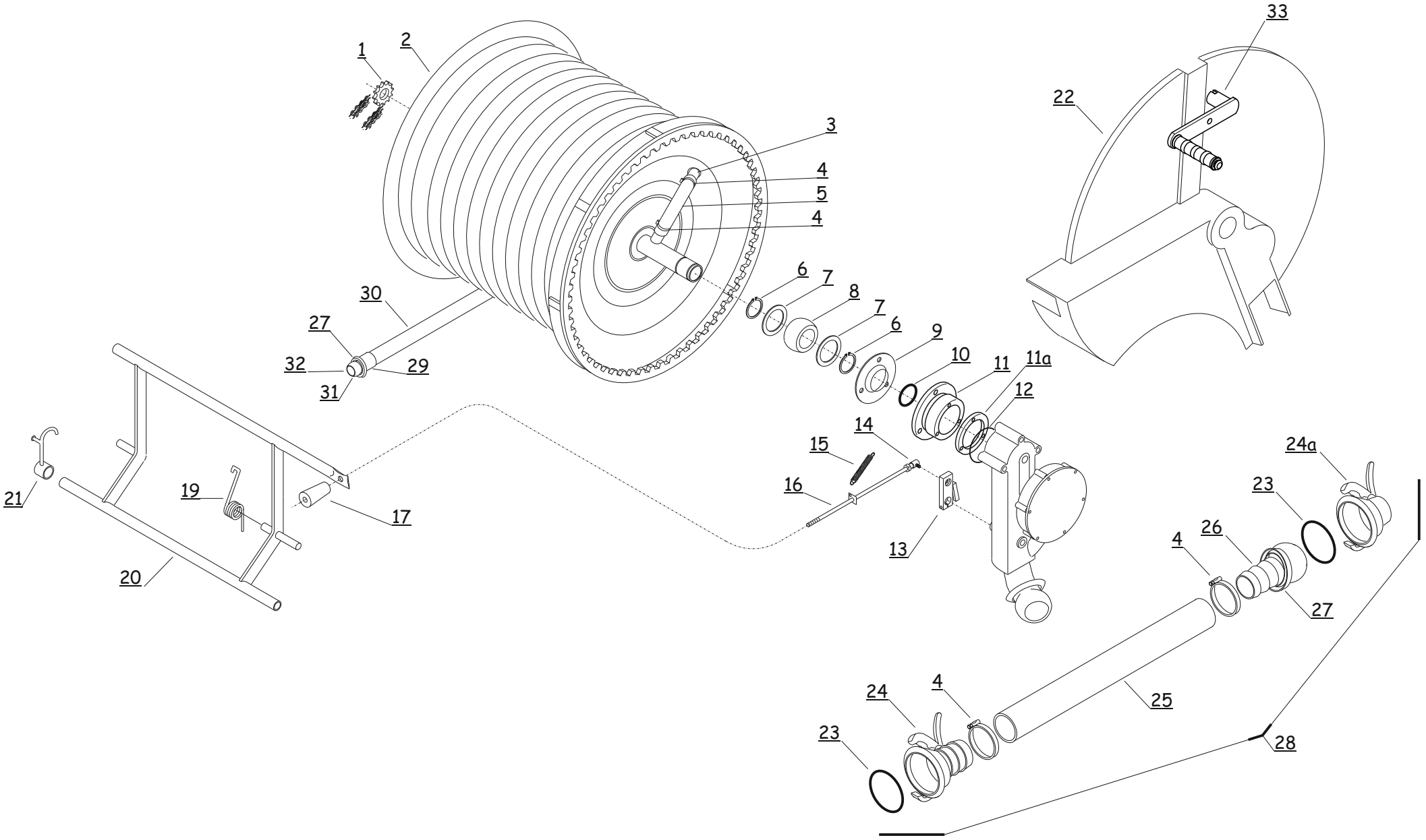

BOBINA
HOSE DRUM
BOBINE

L T: Lato Turbina - LC: Lato Catena
TS: Turbine Side - CS: Chain Side
CT: Cote Turbine - CC: Cote Chaine

N.	COD.	DESCRIZIONE	DESCRIPTION	DENOMINATION	Q.
1	003676	Corona Z12 1/2" 1/8"	Chain wheel Z12 1/2" 1/8"	Couronne Z12 1/2" 1/8"	1
2	AAA 5401939	Bobina	Drum	Bobine	1
3	004667	Curve PET bobina	Drum PET elbow	Coude PET bobine	1
4	001251	Fascetta	Clip	Collier	4
5	000406	Tubo di gomma	Hose	Tuyau en caoutchouc	0,3m,
6	001393	Anello di arresto E40	Stop ring E40	Circlip E40	4
7	001235	Rondella Ø42 sp:2	Washer Ø42 th:2	Rondelle Ø42 ep:2	4
8	001233	Supporto snodato in Delrin	Drum support in Delrin	Palier a rotule en Delrin	2
9	001301	Flangia di supporto	Drum support flange	Bride de palier a rotule	2
10	001377	OR Øi40,65 × 5,34	O ring i40,65 × 5,34	Joint torique i40,65 × 5,34	1
11	001299/B	Giunto girevole	Turning seal	Joint tournant	1
11a	G50003	Adattatore turbina 3/20-100	Update turbine 3/20-100	Adaptateur turbine 3/20-100	1
12	004147	OR3193 Ø48,89×2,62	OR3193 Ø48,89×2,62	Joint torique OR3193 Ø48,89×2,62	1
13	003989/A	Leva by-pass	By-pass lever	Levier de commande by-pass	1
14	003866	Snodo sferico	Ball joint	Articulation a rotule	1
15	001669	Molla di by-pass	By-pass spring	Ressort de by-pass	1
16	004273	Asta di comando by-pass	By-pass rod	Tige de commande by-pass	1
17	004175	Volantino Ø60 M8 mod. 1052/FP	Hand grip	Poignee	1
19	001987	Molla di palpatore	Hose retention bar spring	Ressort de palpeur	1
20	002829	Palpatore	Hose retention bar	Palpeur	1
21	AAA 5400945	Supporto carrello	Trolley support	Support traineau	1
22	003759	Carter turbina	Turbine cover	Carter turbine	1
23	7FEG048	OR FERRARI Ø48	O ring FERRARI Ø48	Joint FERRARI Ø48	2
24	7FES048FC040	Raccordo F, canelato FERRARI Ø48	Pipe fitting FERRARI Ø48	Raccord FERRARI Ø48	1
24a	7FES048F	Raccordo F, FERRARI Ø48	Pipe fitting FERRARI Ø48	Raccord FERRARI Ø48	1
25	000406	Tubo di gomma AT 40×50	Hose	Tuyau en caoutchouc	3m,
26	7FES048MC040	Semigiunto M, FERRARI Ø48 cannellato	FERRARI Ø48 male	FERRARI Ø48 male	2
27	7FEA048	Anello FERRARI Ø48	Ring FERRARI Ø48	Anneau FERRARI Ø48	2
28	16.TA.40	Tubo alimentazione	Hose	Tube d'alimentation	1
29	001542/A	Anello PET Ø40	Ring PET Ø40	Anneau PET Ø40	1
30		Tubo PET 40/110	Hose PET 40/110	Tuyau PET 40/110	1
31	004031	Raccordo fine tubo Ø40 FERRARI	Pipe fitting FERRARI	Raccord fin de tube FERRARI	1
32	07635	Raccordo fine tubo filettato 1"1/4	Pipe fitting 1"1/4	Raccord fin de tube 1"1/4	1
33	003490	Manovella PTO	PTO handle	Manivelle PDF	1

BOBINATORE
HOSEGUIDE MECHANISM
TRANCANAGE

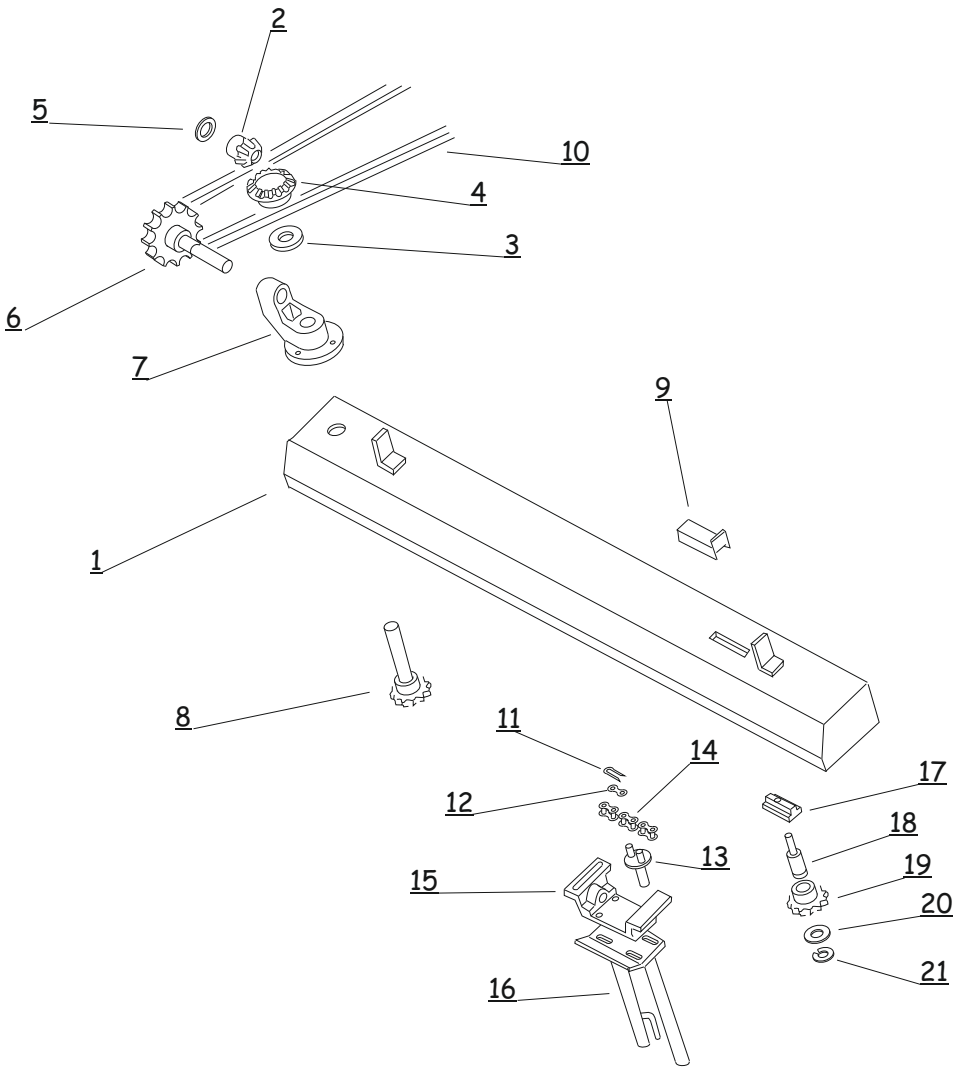

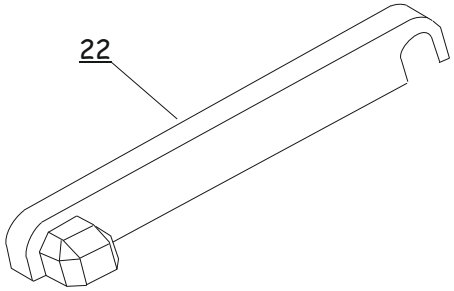

BOBINATORE
HOSEGUIDE MECHANISM
TRANCANAGE

L T: Lato Turbina - LC: Lato Catena
TS: Turbine Side - CS: Chain Side
CT: Cote Turbine - CC: Cote Chaine

N.	COD.	DESCRIZIONE	DESCRIPTION	DENOMINATION	Q.
1	003979/B	Telaio bobinatore	Hose guide frame	Chassis trancanage	1
2		Pignone conico M1,5 Z16	Bevel pinion M1,5 Z16	Pignon conique M1,5 Z16	1
3		Spessore	Spacer	Cale	1
4		Pignone conico M1,5 Z32	Bevel pinion M1,5 Z32	Pignon conique M1,5 Z32	1
5	005158/B40	Spessore	Spacer	Cale	1
6		Pignone Z18 1/2" 1/8" × PET 40	Chain wheel Z18 1/2" 1/8" × PET 40	Couronne Z18 1/2" 1/8" × PET 40	1
7		Corpo coppia conica	Bevel guide frame	Support couple conique	1
8		Pignone motore Z10 1/2" 1/8"	Sprocket Z10 1/2" 1/8"	Pignon moteur Z10 1/2" 1/8"	1
9	AAA5401949	Tendi catena	Chain tightener	Tendeur de chaine	1
10	003999	Catena 1/2" 1/8" 97 passi	Chain 1/2" 1/8" 97p,	Chaine 1/2" 1/8" pas	1
11		Molette	Clip	Clip	1
12		Piastrina	Plate	Plaquette	1
13	001380	Perno di trascinamento	Special hose guide link	Maillon special trancanage	1
14	003997	Catena 1/2" 1/8" 103 passi terminali interni	Chain 1/2" 1/8" 103 p,	Chaine 1/2" 1/8" 103 pas	1
15	005159/A	Testa forcella	Fork support	Tete de fourchette	1
16	003583	Forcella	Fork	Fourchette	1
17	001300	Supporto pignone condotto	Sprocket support	Support de pignon fou	1
18	001409	Perno di pignone condotto	Sprocket pin	Axe de pignon fou	1
19	003900/A	Pignone condotto Z10 1/2" 1/8"	Sprocket Z10 1/2" 1/8"	Pignon fou Z10 1/2" 1/8"	1
20	002547	Spessore 18×12×1	Spacer 18×12×1	Cale 18×12×1	1
21	001211	Anello di arresto E12	Stop ring E12	Circlip E12	1
22	003760	Carter	Carter	Carter	1
	004357	Bobinatore montato	Hose guide mechanism mounted	Trancanage monter	1

>05-2014

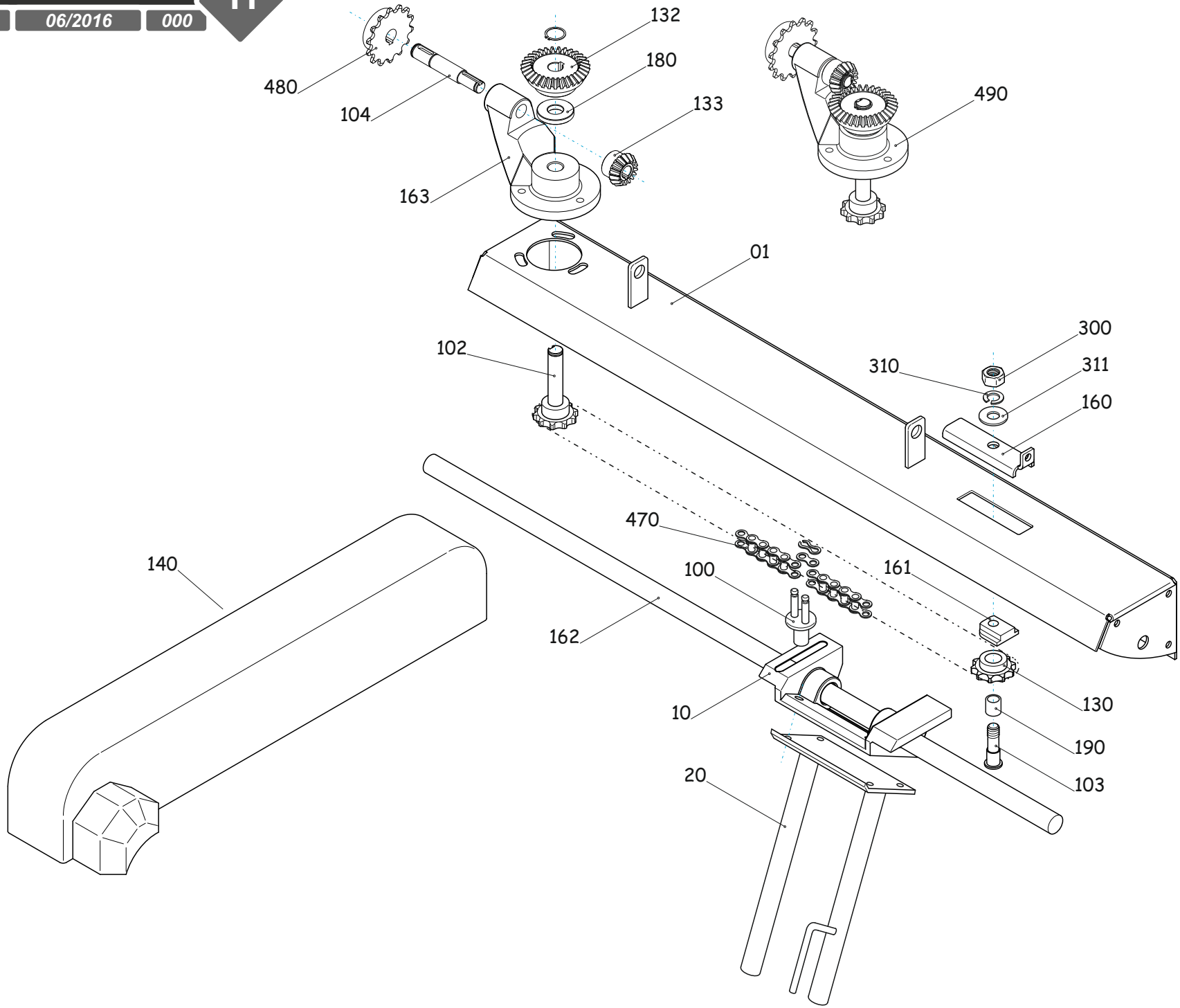
132
180
480
104
133
163
490
01
102
300
310
311
160
470
140
100
161
162
130
10
190
103
20

N.	COD.	DESCRIZIONE	DESCRIPTION	DENOMINATION	Q.
01	**G25284**	Telaio trancanage	Hoseguide mechanism body	Chassis trancanage	1
10	**005159/A**	Testa forcella '97	Fork support '97	Support de fourchette '97	1
20	**003583**	Forcella guidatubo PET Ø50	Hoseguide fork PE Ø50	Fourchette guide tube PET Ø50	1
100	**G14118**	Perno trascinamento 1/2" 5/16"	Special hoseguide link 1/2" 5/16"	Maillon special trancanage 1/2" 5/16"	1
102	**G16035+005233**	Albero con corona Z10 1/2" 5/16"	Shaft with chainwheel Z10 1/2" 5/16"	Axe avec couronne Z10 1/2" 5/16"	1
103	**001409**	Perno ingranaggio folle	Chainwheel pin	Axe pignon fou	1
104	**005234**	Perno coppia conica	Bevel gear pin	Axe couple conique	1
130	**148**	Corona Z10 1/2" 5/16"	Chain wheel Z10 1/2" 5/16"	Couronne Z10 1/2" 5/16"	1
132	**005257**	Pignone Z32 M2	Sprocket Z32 M2	Pignon Z32 M2	1
133	**005256**	Pignone Z16 M2	Sprocket Z16 M2	Pignon Z16 M2	2
140	**003760**	Carter catena	Protection chain carter	Carter de protection chaine	1
160	**AAA5401949**	Tirante catena	Chain tightener	Tendeur de chaine	1
161	**001300**	Supporto Perno ingranaggio folle	Chainwheel pin support	Support axe pignon fou	1
162	**000254**	Tondo trafilato Ø20 guida testa forcella	Fork support guide	Guide support fourchette guide tube	1
163	**005158/A**	Corpo coppia conica	Bevel gear body	Corp couple conique	1
180	**005303**	Spessore Ø35×15,5×5,4	Spacer Ø35×15,5×5,4	Entretoise Ø35×15,5×5,4	1
190	**153**	Bronzina 16×12×10	Bronze ring 16×12×10	Coussinet en bronze 16×12×10	1
300	**7025110**	Dado M10	Nut M10	Ecrou M10	1
310	**7052110**	Rondella grower M10	Grower washer M10	Rondelle Grower M10	1
311	**7050110**	Rondella piana M10	Washer M10	Rondella M10	1
470	**007277**	Catena 1/2" 5/16" 103 P.	Chain 1/2" 5/16" 103 P.	Chaine 1/2" 5/16" 103 P.	1
480	**G16006**	Corona Z18 1/2" 1/8" × PET Ø40	Chain wheel Z14 1/2" 1/8" × PET Ø40	Couronne Z14 1/2" 1/8" × PET Ø40	1
490	**D07018**	Coppia conica maggiorata × PET Ø40	Bevel gear × PET Ø40	Couple conique × PET Ø40	1

SUP. MEC. TURBINA CON RIDUTTORE R126
TURB. MECHANISM WITH GEARBOX R126
MECCANISME TURBINE AVEC REDUCTEUR R126

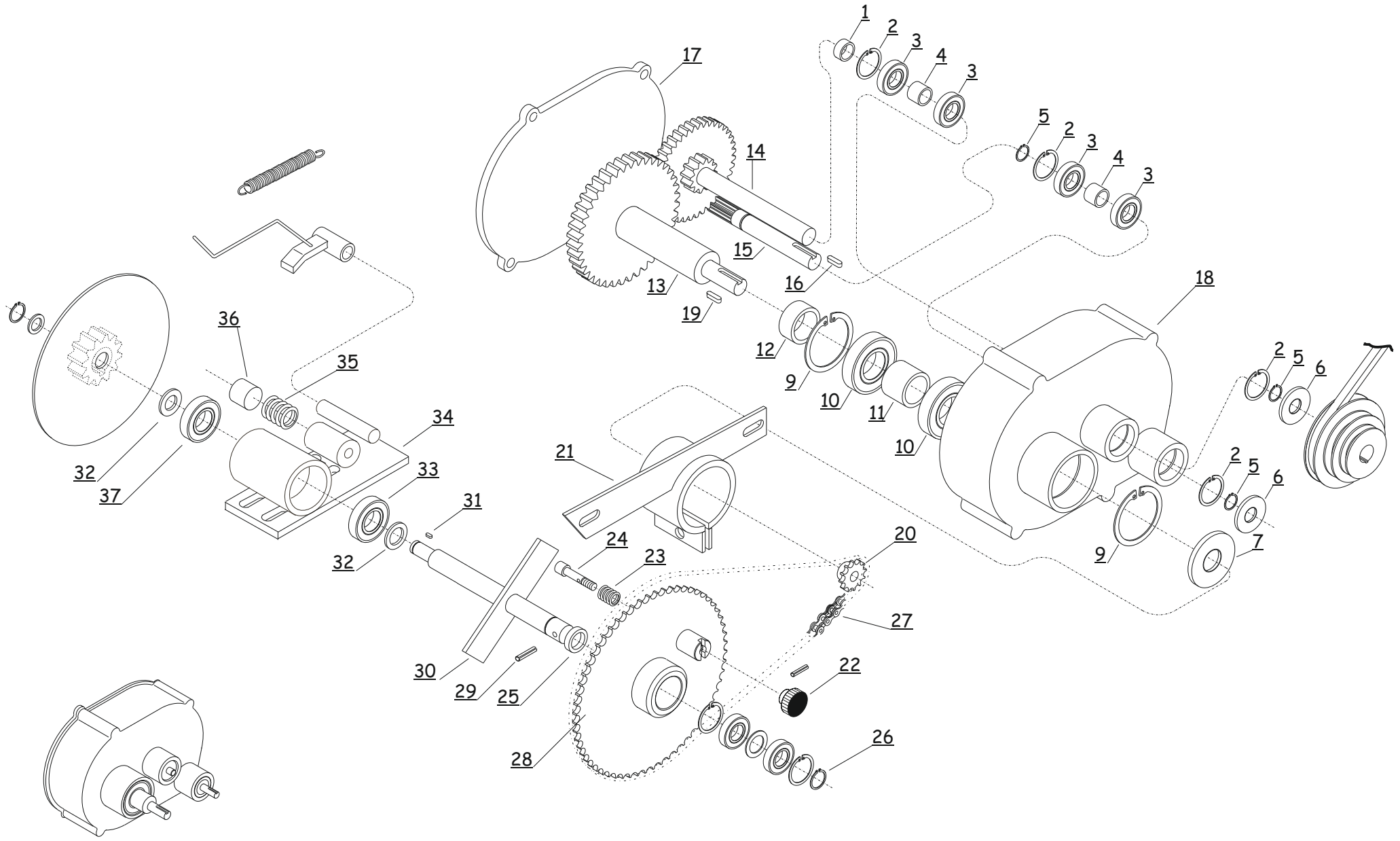

SUP. MEC. TURBINA CON RIDUTTORE R126
TURB. MECHANISM WITH GEARBOX R126
MECCANISME TURBINE AVEC REDUCTEUR R126

LT: Lato Turbina - LC: Lato Catena
TS: Turbine Side - CS: Chain Side
CT: Cote Turbine - CC: Cote Chaine

N.	COD.	DESCRIZIONE	DESCRIPTION	DENOMINATION	Q.
1	003966/A	Distanziale 14×11×5,3	Spacer 14×11×5,3	Entretoise 14×11×5,3	1
2	003685	Anello di arresto i26	Stop ring i26	Circlips i26	4
3	003694	Cuscinetto 6000	Bearing 6000	Roulement 6000	4
4	3003966/B	Distanziale 15×11×10	Spacer 15×11×10	Entretoise 15×11×10	2
5	001210	Anello di arresto E10	Stop ring E10	Circlips E10	3
6	003675	Paraolio Ø10×26	Oil retainer Ø 10×26	Joint a levre Ø 10×26	2
7	003545	Paraolio Ø47×25×7	Oil retainer Ø47×25×7	Joint a levre Ø47×25×7	1
9	03101	Anello di arresto i47	Stop ring i47	Circlips i47	2
10	003693	Cuscinetto 6005	Bearing 6005	Roulement 6005	2
11	003967/A	Distanziale sp:9	Spacer th:9	Entretoise ep:9	1
12	003967	Distanziale sp:7,5	Spacer th:7,5	Entretoise ep:7,5	1
13	D13005	Perno con pignone Z100 M1	Sprocket Z100 M1	Pignon Z100 M1	1
14	004437	Pignone intermedio	Middle sprocket	Pignon intermediare	1
15	184001	Pignone d'ingresso M0,75 Z11	Inlet sprocket M0,75 Z11	Pignon d'entree M0,75 Z11	1
16	003186	Chiavetta 3×10	Key 3×10	Clavette 3×10	1
17	004529	Coperchio	Cover	Couverde	1
18	004394/A	Corpo riduttore	Gearbox body	Corps de reducteur	1
19	06222	Chiavetta 5×20	Key	Clavette	1
20	G16026	Pignone Z9 1/2" 5/16"	Chain wheel Z9 1/2" 5/16"	Couronne Z9 1/2" 5/16"	1
21	AAA 5401956	Supporto riduttore	Gearbox support	Support de reducteur	1
22	002496	Pomello M8	Hand grip M8	Poignee M8	1
23	003903	Molla	Spring	Ressort	1
24	G14028	Perno d' innesto	Pin	Doight de verrouillage	1
25	G08053	Distanziale Ø19,4×15,22	Spacer Ø19,4×15,22	Entretoise Ø19,4×15,22	1
26	002315	Anello di arresto E15	Stop ring E15	CirclipE15	1
27	006349	Catena 1/2" 5/16" 63p + giunto	Chain 1/2" 5/16" 63p +Union link	Chaine 1/2" 5/16" 63p + jonction	1
28	G06060	Corona Z45 1/2" 5/16"	Chain wheel Z45 1/2" 5/16"	Couronne Z45 ½" 5/16"	1
29		Spina elastica	Spring pin	Goupille mecanindus	1
30	003938	Perno secondario Ø15	Shaft Ø15	Axe Ø15	1
31	004008	Chiavetta 4×20	Key 4×20	Clavette 4×20	1
32		Rondella Ø15	Washer Ø15	Rondelle Ø15	1
33	003695	Cuscinetti 6002	Bearing 6002	Roulement	1
34	004152	Supporto mecanismo	Mechanism support	Support mechanisme	1
35	02610	Molla	Spring pin	Ressort	1
36	005650	Tampone freno	Brake pad	Tampon de frein	1
37	001202	Cuscinetto 6001	Bearing 6001	Roulement 6001	1

SUP. MEC. TURBINA CON RIDUTTORE R126
TURB. MECHANISM WITH GEARBOX R126
MECCANISME TURBINE AVEC REDUCTEUR R126

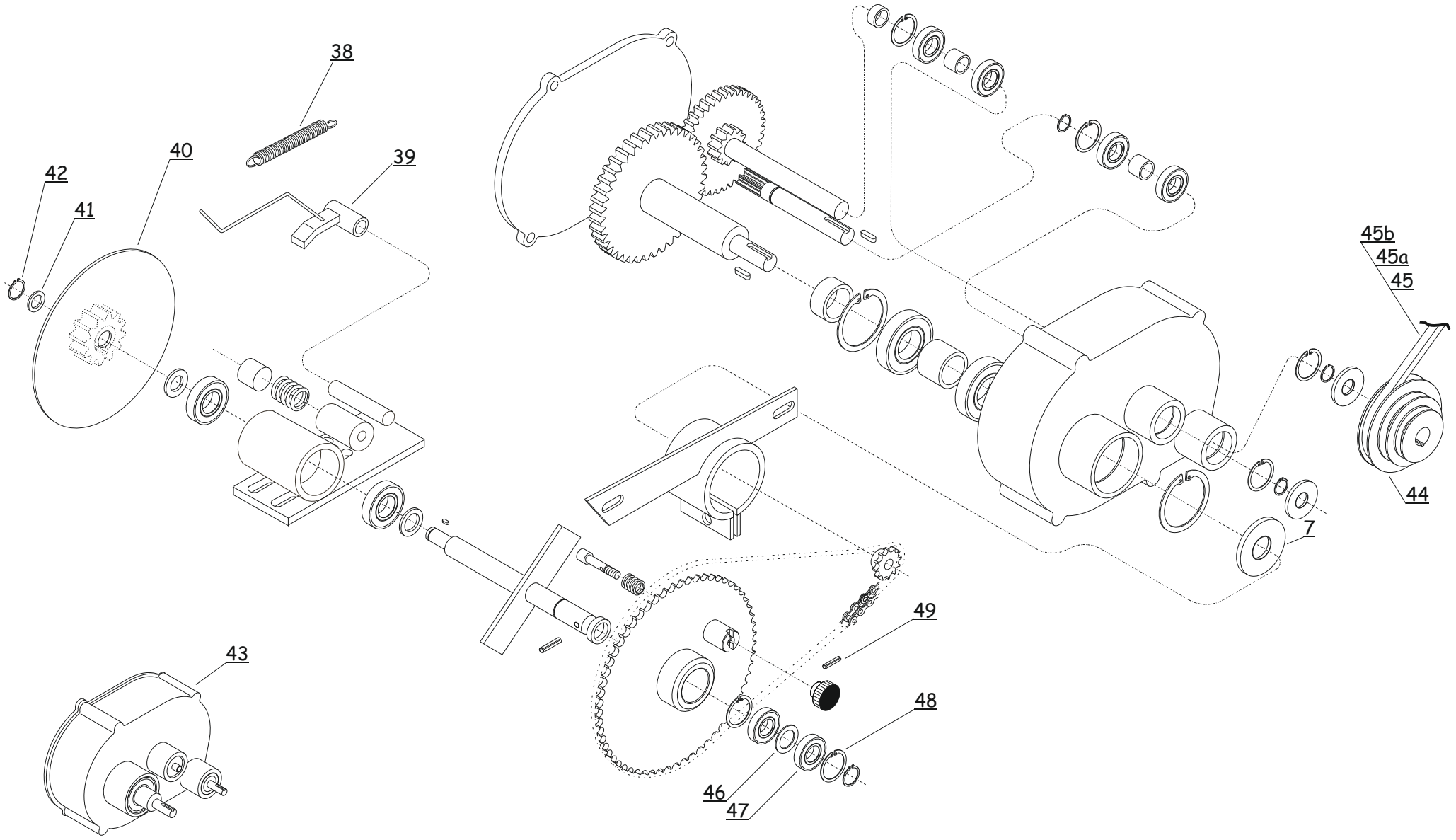

SUP. MEC. TURBINA CON RIDUTTORE R126
TURB. MECHANISM WITH GEARBOX R126
MECCANISME TURBINE AVEC REDUCTEUR R126

L T: Lato Turbina - LC: Lato Catena
TS: Turbine Side - CS: Chain Side
CT: Cote Turbine - CC: Cote Chaine

N.	COD.	DESCRIZIONE	DESCRIPTION	DENOMINATION	Q.
38	003442	Molla a trazione filo 2	spring	Ressort	1
39	004042	Chiavetta anti-ritorno	Non return key	Clavette anti-retour	1
40	001400	Pignone disco	Disc sprocket	Pignon disque	1
41		Rondella Ø12	Washer Ø12	Rondelle Ø12	1
42	001211	Anello di arresto E12	Stop ring E12	Circlip E12	1
43	004394/B	Assieme riduttore	Gearbox assy	Ensemble reducteur	1
44	004134	Puleggia a 3 stadi 3 stage	Pulley	Poulie a 3 gorge	1
45	004726	Cinghia FO 6/Y 695 LI	Belt FO 6/Y 695 LI	Courroie FO 6/Y 695 LI	1
45a	005897	Cinghia FO 6/Y 706 LI	Belt FO 6/Y 706 LI	Courroie FO 6/Y 706 LI	1
45b	004827	Cinghia FO 6/Y 714 LI	Belt FO 6/Y 714 LI	Courroie FO 6/Y 714 LI	1
46		Spessore Ø15	Spacer Ø15	Entretoise Ø15	1
47	006365	Cuscinetto 61902 2RS	Bearing 61902 2RS	Roulement 61902 2RS	2
48		Seeger I28	Stop ring I28	Circlips I28	2
49	003994	Spina elastica Ø3×20	Spring pin Ø3×20	Goupille mecanindus Ø3×20	1

TURBINA 3/20
TURBINE 3/20
TURBINE 3/20

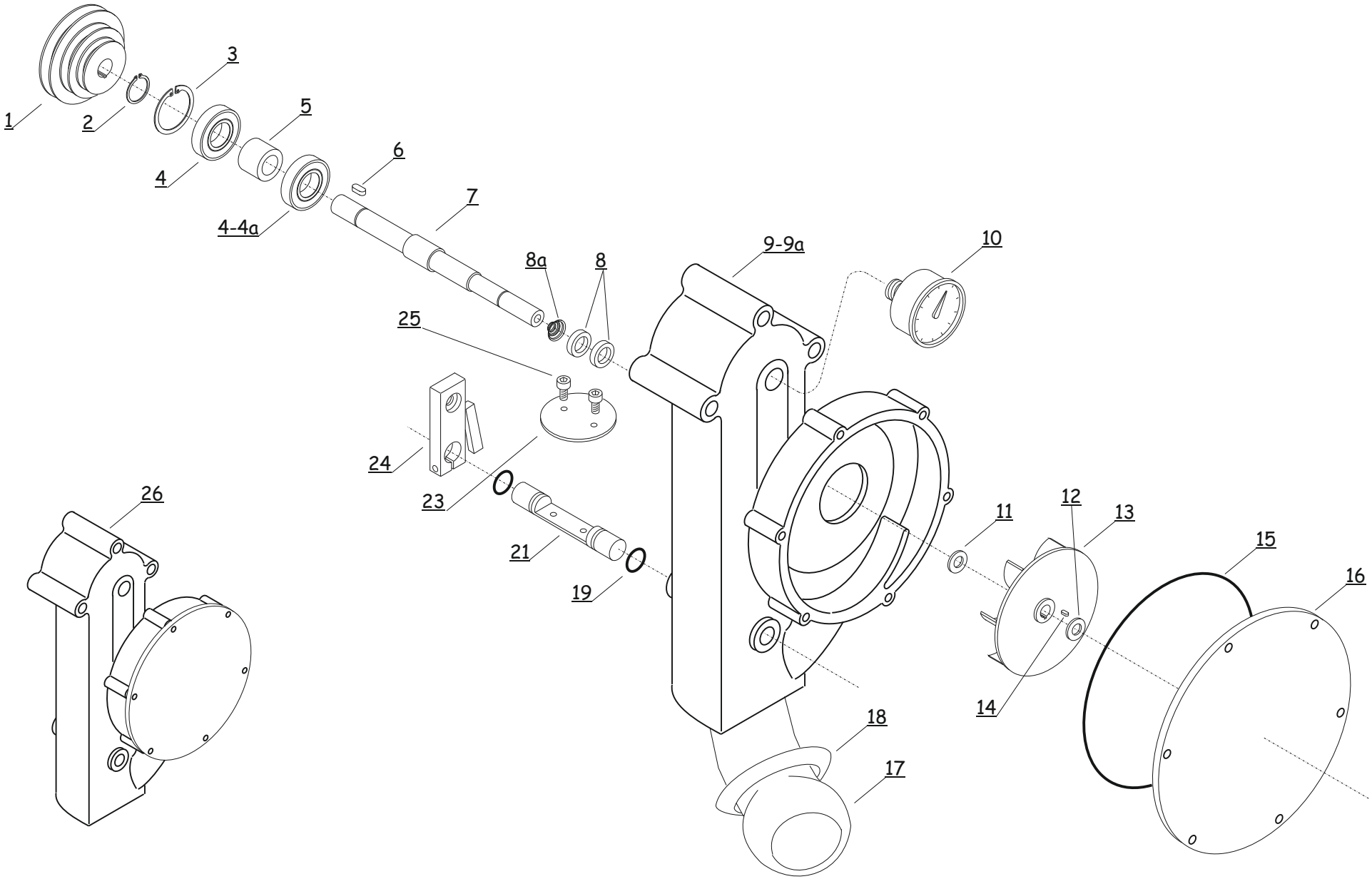

TURBINA 3/20
TURBINE 3/20
TURBINE 3/20

LT: Lato Turbina - LC: Lato Catena
TS: Turbine Side - CS: Chain Side
CT: Cote Turbine - CC: Cote Chaine

N.	COD.	DESCRIZIONE	DESCRIPTION	DENOMINATION	Q.
1	004135	Puleggia a 3 stadi × turb 3/20 (AAA/AA/A5)	Pulley	Poulie	1
2	001210	Anello di arresto E10	Stop ring E10	Circlips E10	1
3	003904	Anello di arresto i30	Stop ring i30	Circlips i30	1
4	003171	Cuscinetto 6200 2RS	Bearing 6200 2RS	Roulement 6200 2RS	2
4a	006712	Cuscinetto 6300 2RS verz.2009	Bearing 6300 2RS vers.2009	Roulement 6300 2RS vers.2009	2
5	004004	Distanziale 16×10,3×14	Spacer 16×10,3×14	Entretoise 16×10,3×14	1
6	003186	Chiavetta 3×10	Key 3×10	Clavette 3×10	1
7	003846	Perno girante	Impeller shaft	Axe de roue	1
8	003192	Tenuta	Seal	Joint tournant	1
8	003192	Tenuta	Seal	Joint tournant	1
8a	001624	Molla conica × tenuta turbina 3/20	Spring seal	Ressort de joint tournant	1
9	004057/A	Corpo turbina 3/20	Turbine 3/20 body	Corps turbine 3/20	1
9a	G07004	Corpo turbina 3/20 verz.2009	Turbine 3/20 body vers.2009	Corps turbine 3/20 vers.2009	1
10	095	Manometro 0-25 bar 1/4" conico posteriore	Pressure gauge	Manometre	1
11	004564	Spessore ottone 10,2×15,8×1,5	Spacer	Entretoise	1
12		Rondella	Washer	Rondelle	2
13	003871	Girante	Impeller	Roue	1
14	003186	Chiavetta 3×10	Key 3×10	Clavette 3×10	1
15	003751	OR 4400 Ø 101,2 × 3,53	O-ring Ø 101,2 × 3,53	Joint Ø 101,2 × 3,53	1
16	003747/A	Coperchio turbina	Turbine cover	Couvercle	1
17	004272	Curva alimentazione inferiore	Lower feeding elbow	Coude d'alimentation inferieure	1
18	7FEA048	Anello FERRARI Ø 48	Connecting ring FERRARI Ø48	Anneau FERRARI Ø48	1
19	003752	OR 104 Ø6,07 × 1,78	O-ring Ø 6,07 × 1,78	Joint Ø 6,07 × 1,78	2
21	004108	Perno by-pass	By-pass shaft	Axe de by-pass	1
23	005362/A	Disco by-pass senza OR	By-pass disc without OR	Disque de by-pass sans joint	1
24	03989/A	Leva di commando	By-pass Lever, control by-pass	Levier de commande by-pass	1
25	7000360408000	Viti TE 4×8 inox	Screw 4×8 inox	Vis 4×8 inox	2
26	004057/B	Turbina completa	Turbine assy	Turbine assemblee	1

TURBINA 3/20-100
TURBINE 3/20-100
TURBINE 3/20-100

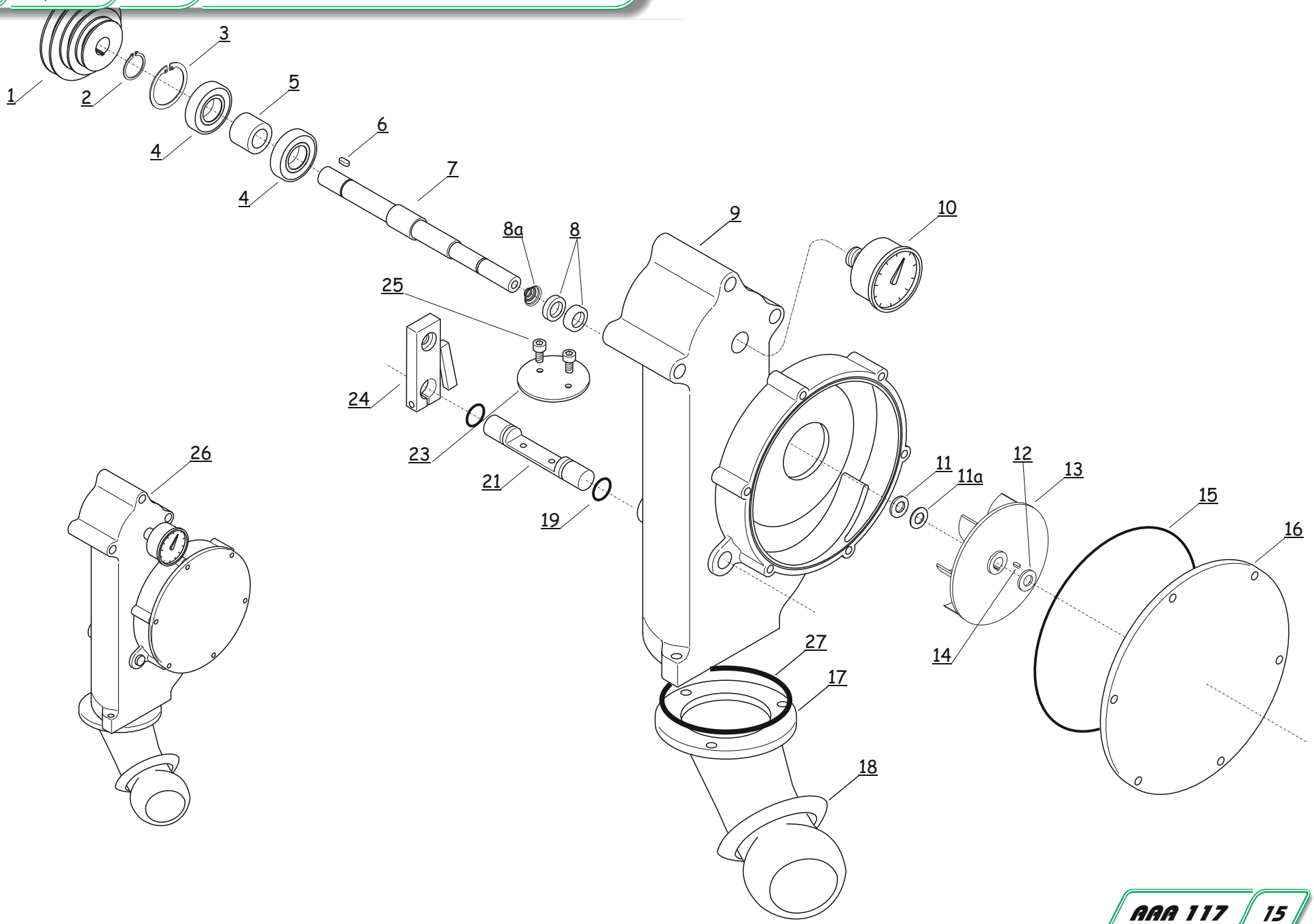

L T: Lato Turbina - LC: Lato Catena
TS: Turbine Side - CS: Chain Side
CT: Cote Turbine - CC: Cote Chaine

N.	COD.	DESCRIZIONE	DESCRIPTION	DENOMINATION	Q.
1	004135	Puleggia a 3 stadi × turb 3/20 (AAA/AA/A5)	Pulley	Poulie	1
2	001211	Anello di arresto E12	Stop ring E12	Circlips E12	1
3	003285	Anello di arresto i32	Stop ring i32	Circlips i32	1
4	004797	Cuscinetto 6201 2RS	Bearing 6201 2RS	Roulement 6201 2RS	2
5	G08063	Distanziale 12,6×18×26,5	Spacer 10,6×18×26,5	Entretoise 10,6×18×26,5	1
6	003186	Chiavetta 3×10	Key 3×10	Clavette 3×10	1
7	G14098	Perno girante Ø12	Impeller shaft Ø12	Axe de roue Ø12	1
8	006691	Tenuta	Seal	Joint tournant	1
8	006691	Tenuta	Seal	Joint tournant	1
8a	006691	Molla conica × tenuta turbina 3/20	Spring seal	Ressort de joint tournant	1
9	G21005	Corpo turbina 3/20/100	Turbine 3/20/100 body	Corps turbine 3/20/100	1
10	095	Manometro 0-25 bar 1/4" conico posteriore	Pressure gauge	Manometre	1
11	004564	Spessore ottone cotto 10,2×15,8×1,5	Spacer 10,2×15,8×1,5	Entretoise 10,2×15,8×1,5	1
11a	003905	Spessore in ottone 10,2×15,8×0,3	Spacer 10,2×15,8×0,3	Entretoise 10,2×15,8×0,3	-
12		Rondella	Washer	Rondelle	2
13	G55002	Girante	Impeller	Roue	1
14	003186	Chiavetta 3×3×10	Key 3×3×10	Clavette 3×3×10	1
15	007068	OR 2-160 133,02×2,62	O-ring 2-160 133,02×2,62	Joint 2-160 133,02×2,62	1
16	G05037	Coperchio turbina	Turbine cover	Couvercle	1
17	G27195	Curva alimentazione inferiore	Lower feeding elbow	Coude d'alimentation inferieure	1
18	7FEA048	Anello FERRARI Ø 48	Connecting ring FERRARI Ø48	Anneau FERRARI Ø48	1
19	003752	OR 104 Ø5,28 × 1,78	O-ring Ø5,28 × 1,78	Joint Ø5,28 × 1,78	2
21	004108	Perno by-pass	By-pass shaft	Axe de by-pass	1
23	005362/A	Disco by-pass senza OR	By-pass disc without OR	Disque de by-pass sans joint	1
24	03989/A	Leva di commando	By-pass Lever, control by-pass	Levier de commande by-pass	1
25	7000360408000	Viti TE 4×8 inox	Screw 4×8 inox	Vis 4×8 inox	2
26	D09007	Turbina completa	Turbine assy	Turbine assemblee	1
27	007067	OR 3200 50,47×2,62	O-ring 3200 50,47×2,62	Joint 3200 50,47×2,62	1

CARRELLO
TROLLEY
TRAINEAU

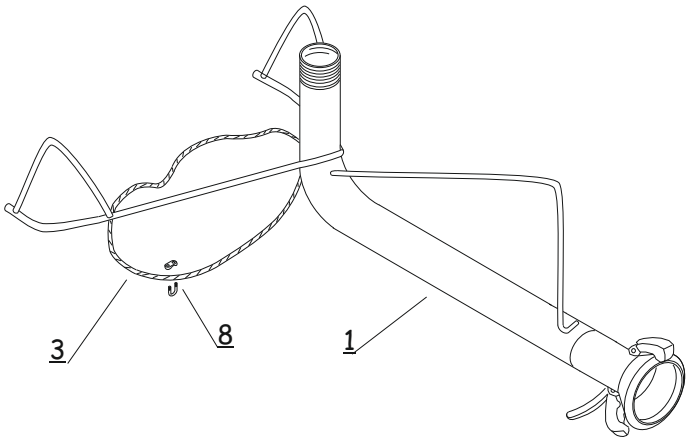

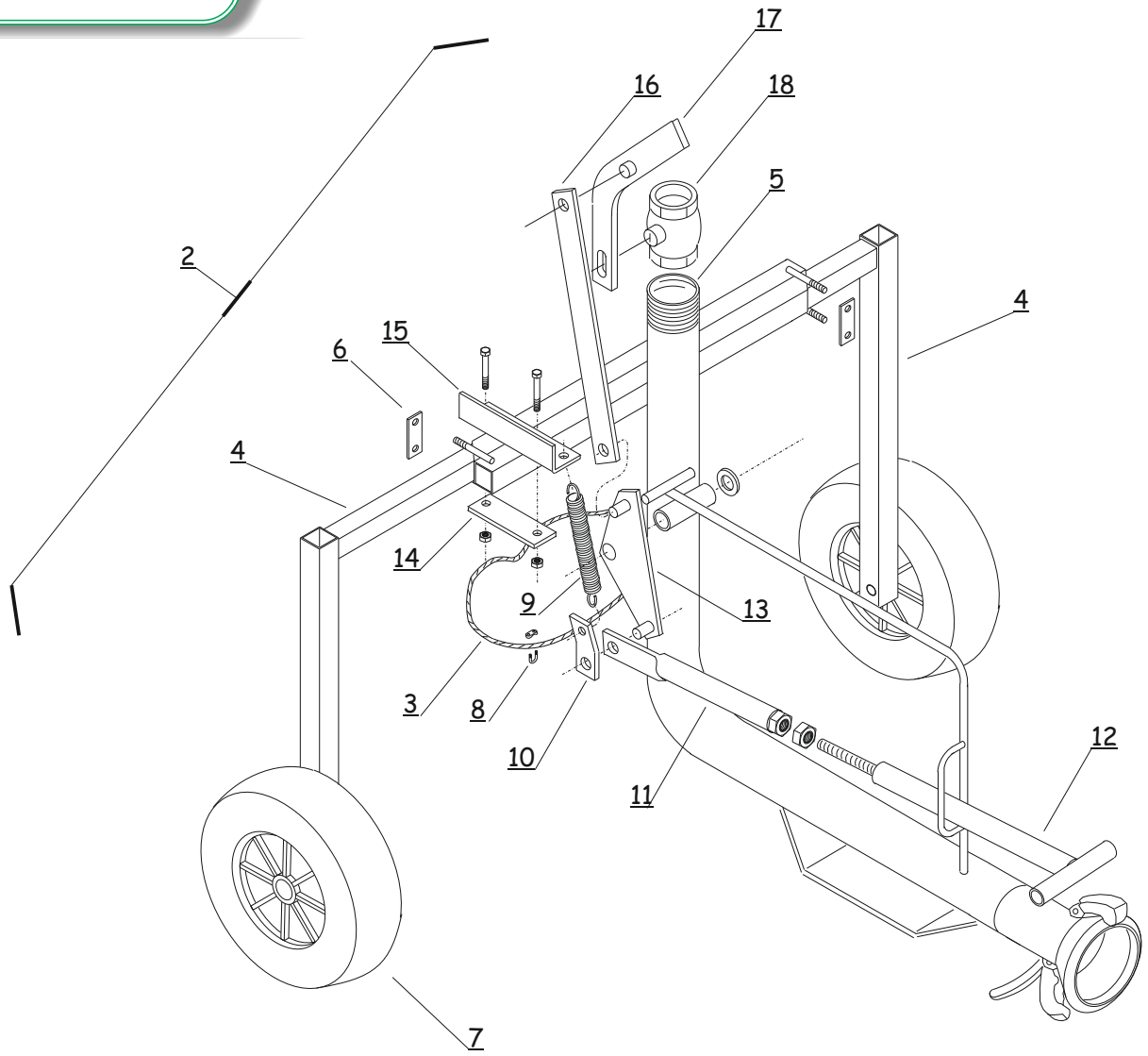

L T: Lato Turbina - LC: Lato Catena
TS: Turbine Side - CS: Chain Side
CT: Cote Turbine - CC: Cote Chaine

N.	COD.	DESCRIZIONE	DESCRIPTION	DENOMINATION	Q.
1	16.C.AAA.SL	Carrello slitta	Slide trailer	Traineau a patins	1
2	16.C.AAA.RU	Carrello ruota senza kit VAS	Wheel trailer without kit VAS	Traineau a roue sans kit VAS	1
3	003465	Cavo traino	Rope	Cable	1
4	004661	Gambe	Leg	Jambe	2
5	004660	Corpo centrale carrello	Central body	Corps central	1
6	004662	Piastra bloccaggio gamba	Plate	Plat de bloquage jambe	2
7	001533	Ruota	Wheel	Roue	2
8	002970	Morsetto zincato	Clamp	Cavalier	1
9	002937	Molla	Spring	Ressort	1
10	005550	Piastra aggancio molla	Plate, spring support	Plat d'attache ressort	1
11	005553	Staffa aggancio comando chiusura VAS VAS	Comand rod	Levier commande VAS	1
12	005552	Asta comando chiusura VAS	Rod, stop comand	Levier d'arret VAS	1
13	005551	Suadra rinvio tirante VAS	Plate, rod comand	Equerre renvoi tirant	1
14	005547	Piatto 110×30 supporto molla	Plate 110×30 spring support	Plat 110×30 support de ressort	1
15	005548	Supporto aggancio molla	Spring support	Support attache ressort	1
16	005554	Asta tirante leva comando VAS	Rod, Shut-off valve comand lever	Levier tirant commande VAS	1
17	005549	Leva comando VAS VAS	Comand lever	Levier de commande VAS	1
18	004511	Rubinetto a sfera 1"1/4 F/F	Spheric valve 1"1/4 F/F	Robinet à sphere 1"1/4 F/F	1