DIMENSIONS

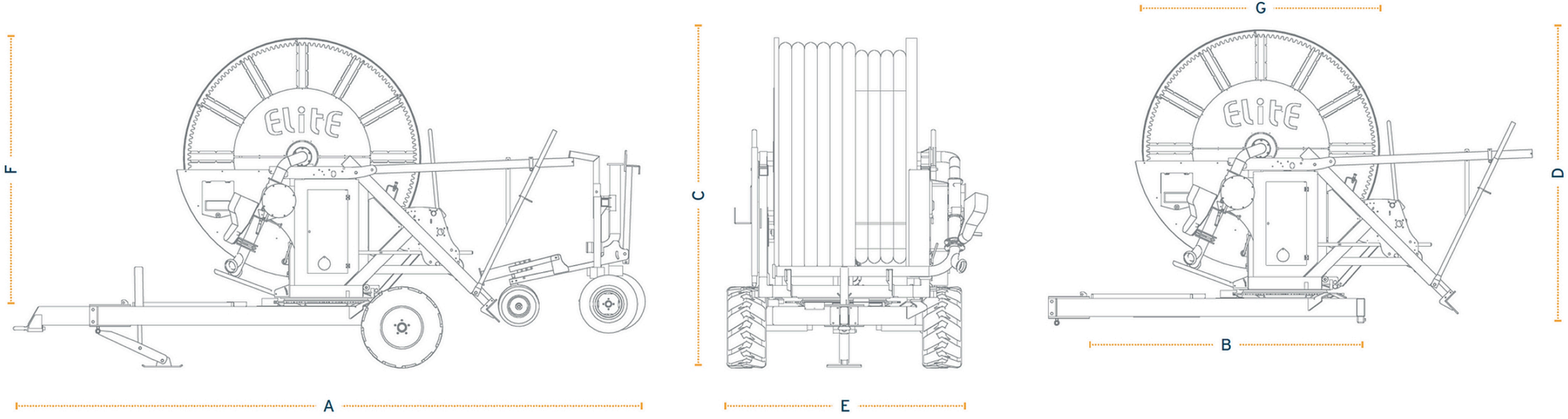

Model	A (mm)	B (mm)	C (mm)	D (mm)	E (mm)	F (mm)	G (mm)	Weight with trolley (kg)
305	5470	3615	2670	2350	2160	2085	2640	1700
310	5470	3615	2670	2350	2160	2085	2640	1780