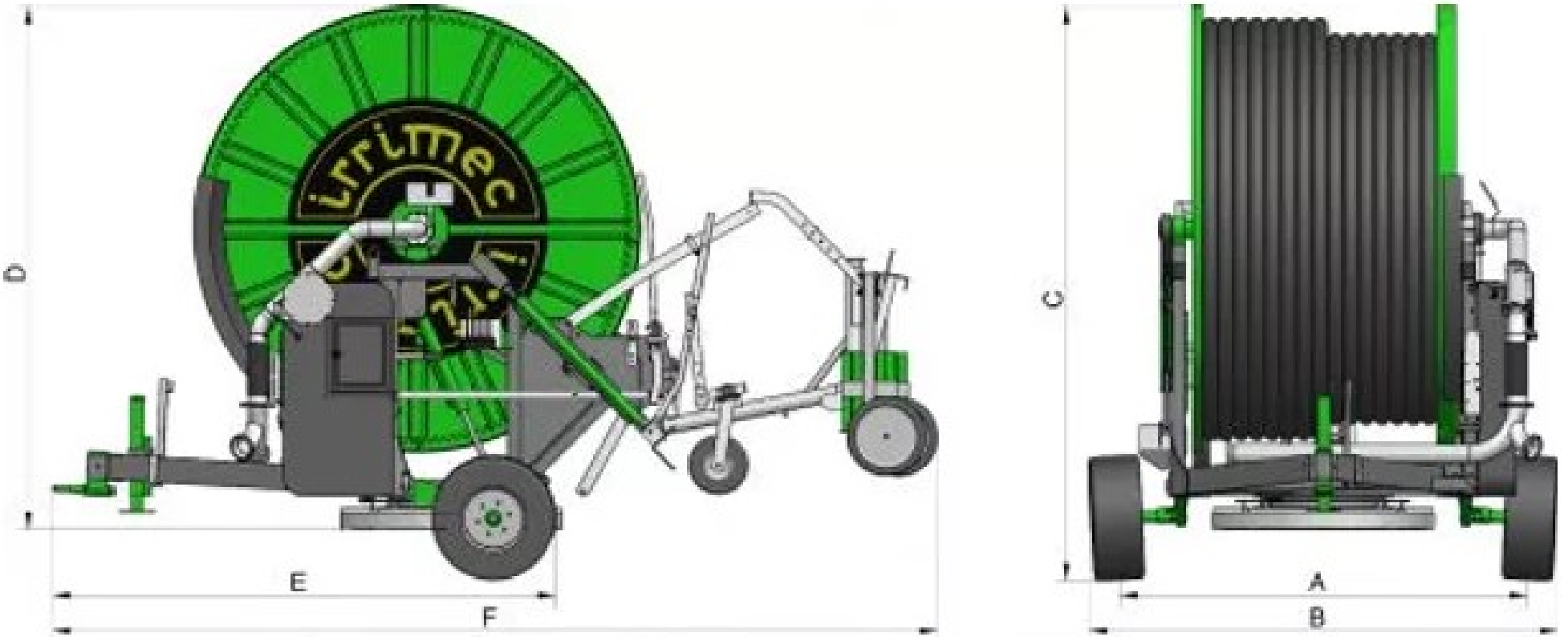

PET	"A"	"B"	"C"	"D"	"E"	"F"
Ø100/530-560	2604 - 2612	3010	3552	3225	3215 ± 10	5655 ± 100
Ø110/500	2604 - 2612	3010	3585	3258	3215 ± 10	5655 ± 100
Ø100/630 Ø120/400 Ø125/420 Ø140/300	2604 - 2612	3010	3672	3345	3215 ± 10	5655 ± 100
Ø110/550 Ø120/470-500	2604 - 2612	3010	3698	3371	3215 ± 10	5655 ± 100
Ø125/450	2604 - 2612	3010	3710	3383	3215 ± 10	5655 ± 100
Ø135/350-380-400	2604 - 2612	3010	3722	3395	3215 ± 10	5655 ± 100
Ø110/600	2604 - 2612	3010	3734	3407	3215 ± 10	5655 ± 100
Ø140/320-360-380	2604 - 2612	3010	3741	3414	3215 ± 10	5655 ± 100