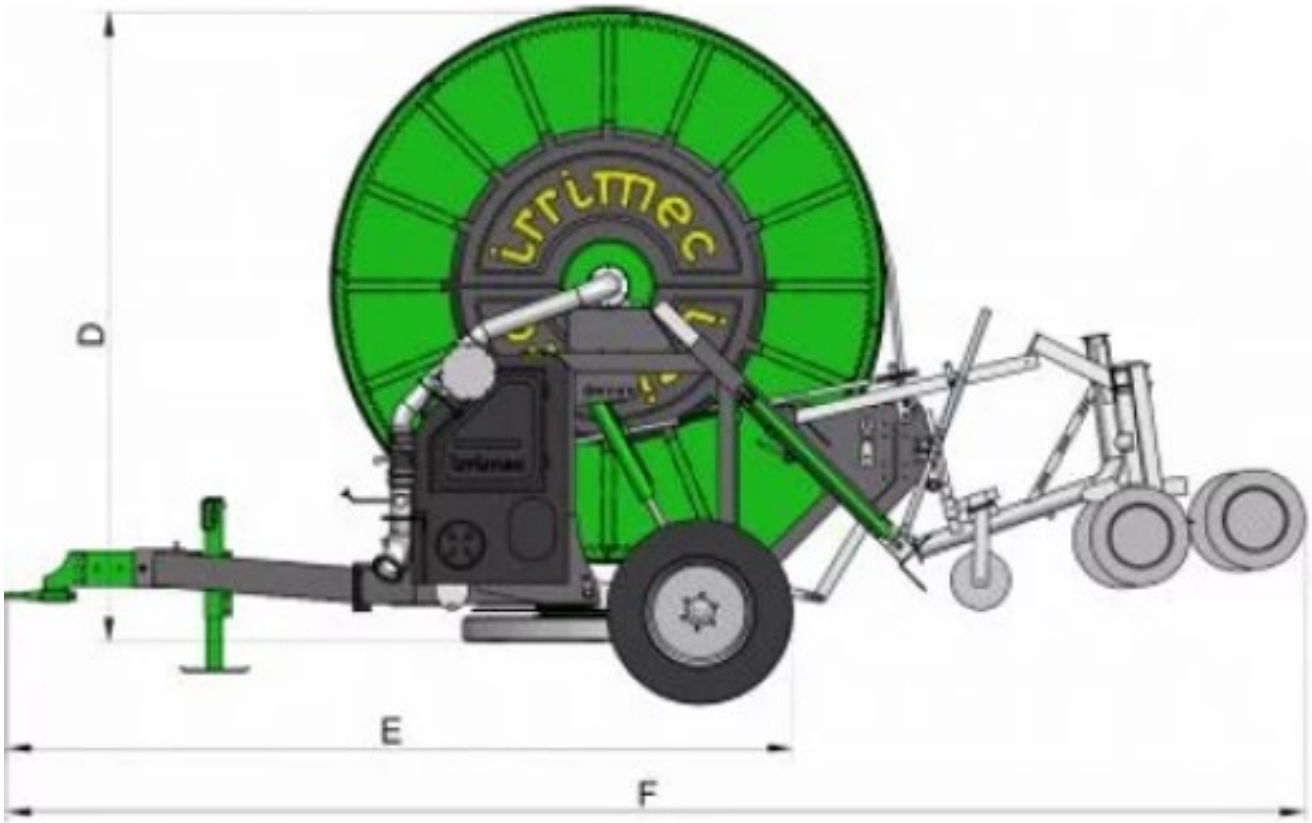

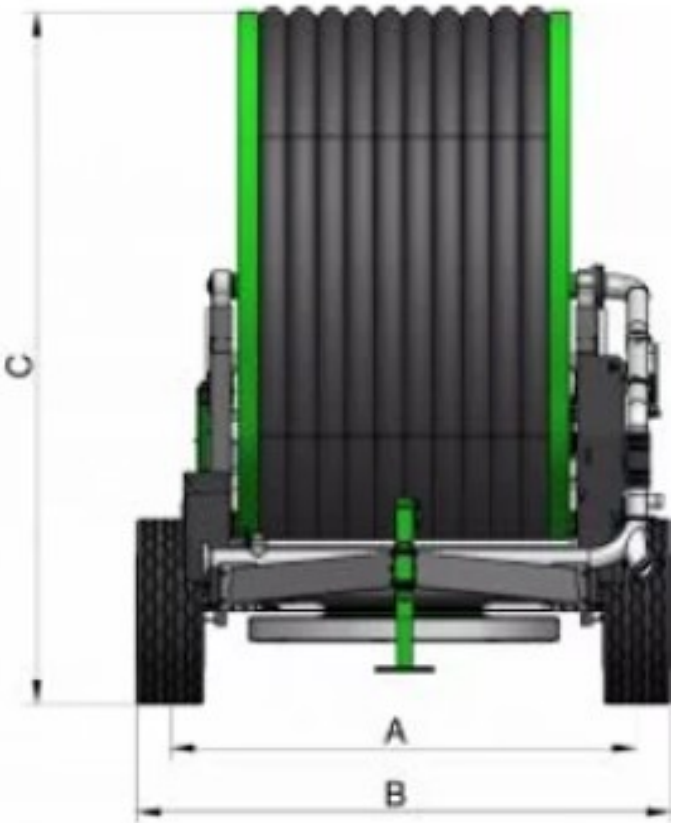

PET	"A"	"B"	"C"	"D"	"E"	"F"
Ø110 Ø120 Ø125	2730	3128	(max)4090	(max)3724	4597 ± 10	7595 ± 100
Ø135 Ø140 Ø150 Ø160	2730	3128	(max)4329	(max)3963	4597 ± 10	7595 ± 100