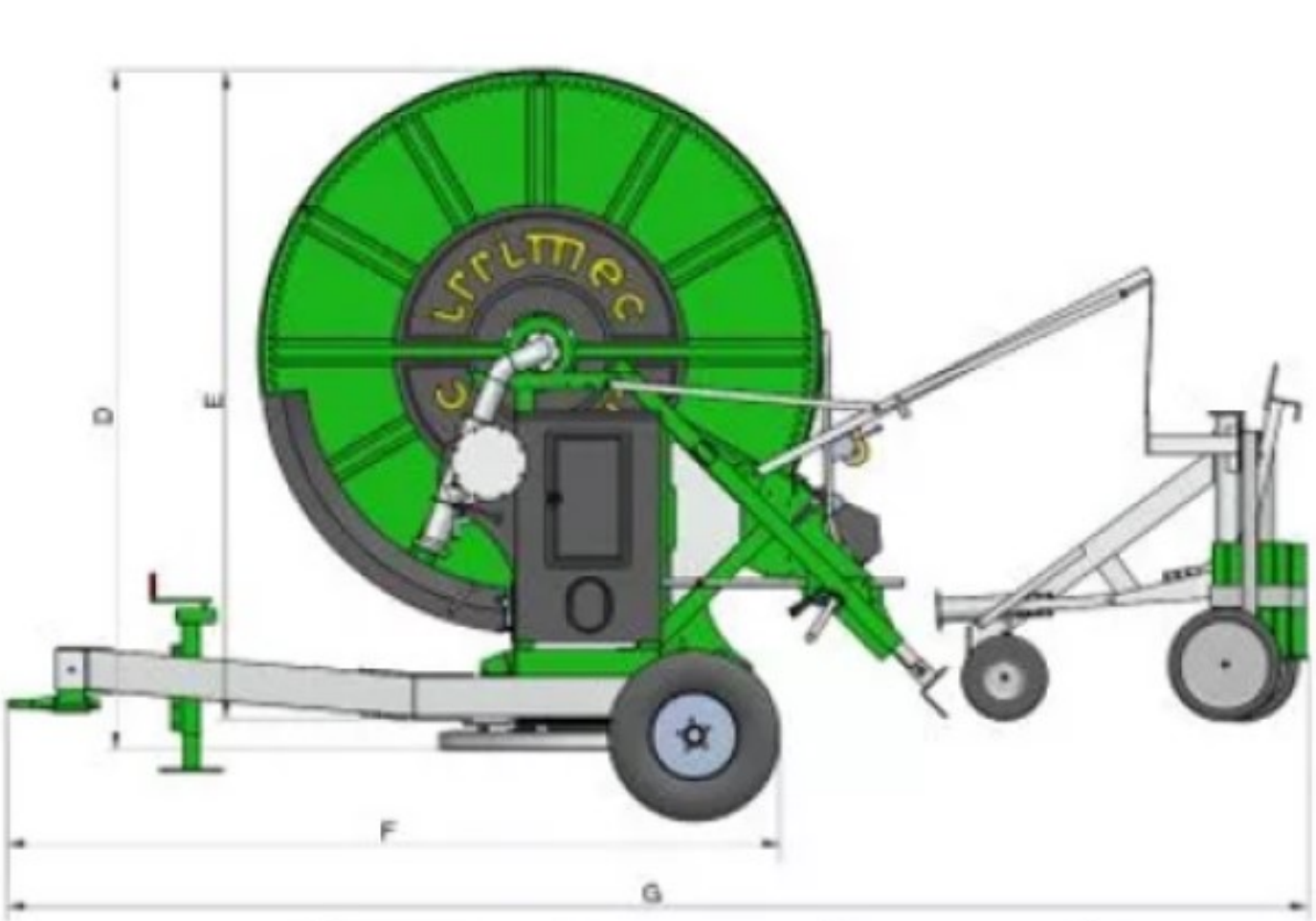



PET	"A"	"B"	"C"	"D"	"E"	"F"	"G"
Ø82/450 Ø90/350-370-420 Ø100/320-350 Ø120/240	2086 ± 50	2350 ± 50	3337	3020	2885	3432 ± 10	5779 ± 100
Ø125/230-250	2086 ± 50	2350 ± 50	3342	3025	2890	3432 ± 10	5779 ± 100
Ø90/450	2086 ± 50	2350 ± 50	3348	3031	2896	3432 ± 10	5779 ± 100
Ø100/400-430 Ø110/300-330-350	2086 ± 50	2350 ± 50	3374	3057	2922	3432 ± 10	5779 ± 100
Ø120/270-300	2086 ± 50	2350 ± 50	3377	3060	2925	3432 ± 10	5779 ± 100
Ø125/270	2086 ± 50	2350 ± 50	3403	3086	2951	3432 ± 10	5779 ± 100