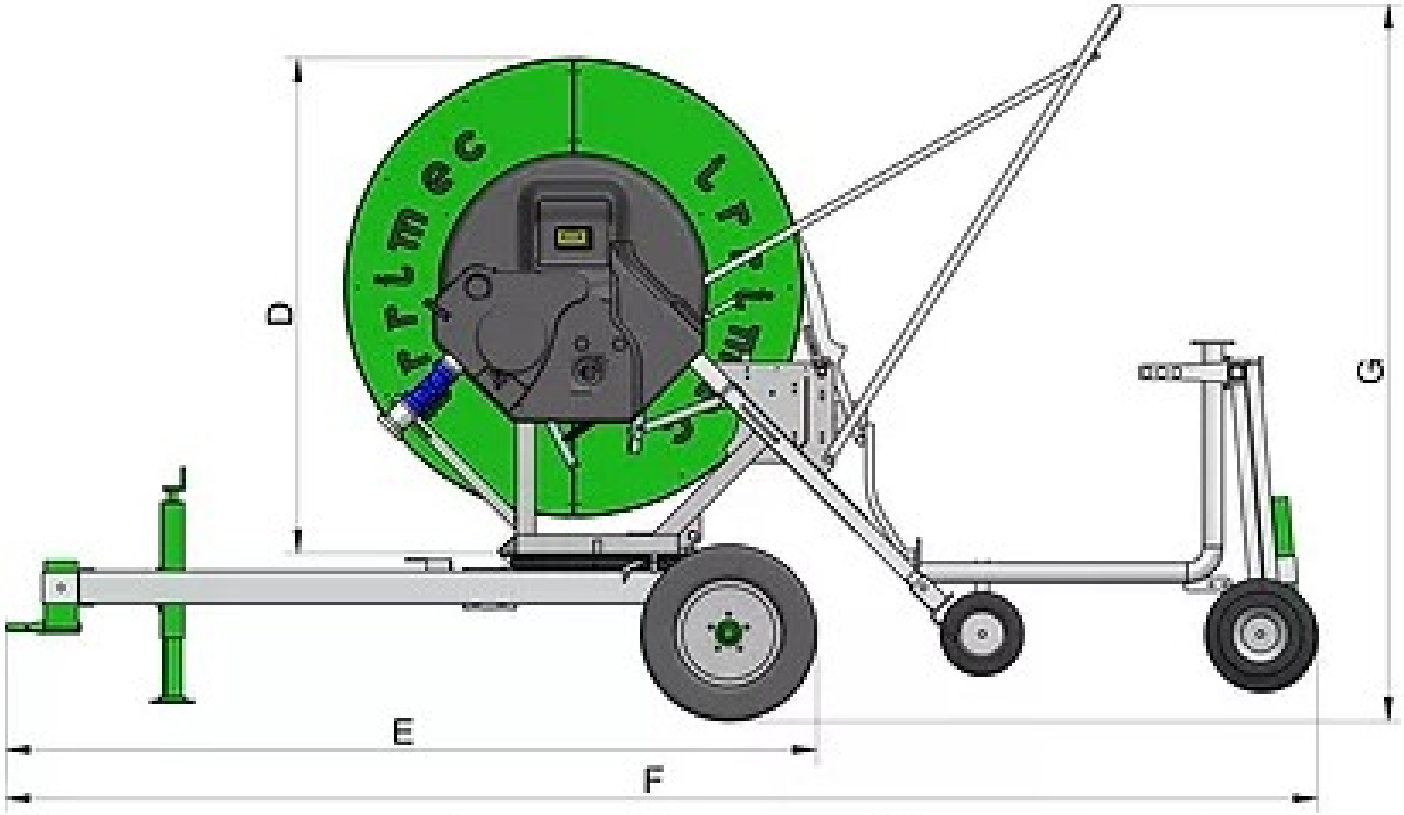

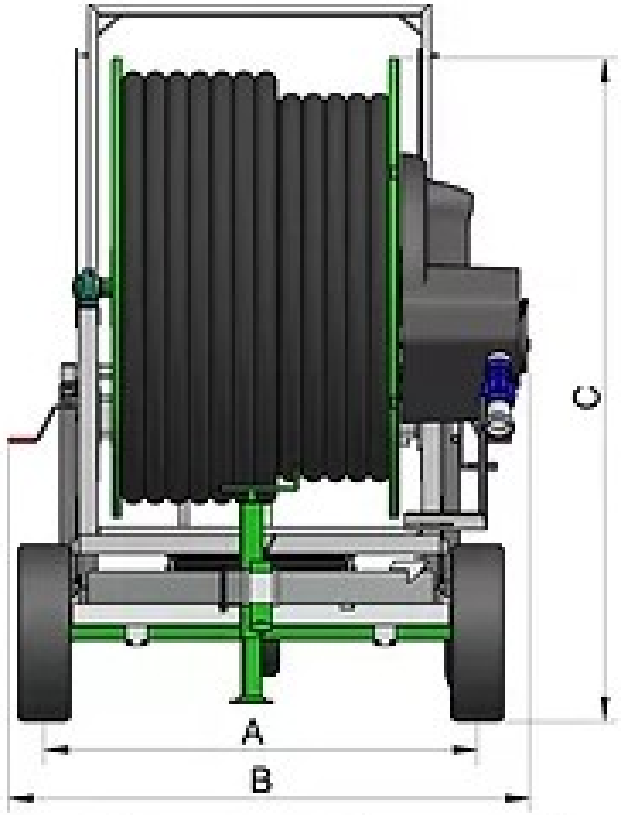

PET	*"A"*	*"B"*	*"C"*	*"D"*	*"E"*	*"F"*	*"G"*
Ø63/250-280-300 Ø70/220-240-270-300 Ø75/200-220 Ø82/180-200	*1610*	*1935*	*2456*	*1835*	*3006 ± 10*	*4861 ± 100*	*2656*
Ø75/230-245	*1610*	*1935*	*2464*	*1843*	*3006 ± 10*	*4861 ± 100*	*2656*
Ø75/250-300	*1610*	*1935*	*2476*	*1855*	*3006 ± 10*	*4861 ± 100*	*2656*