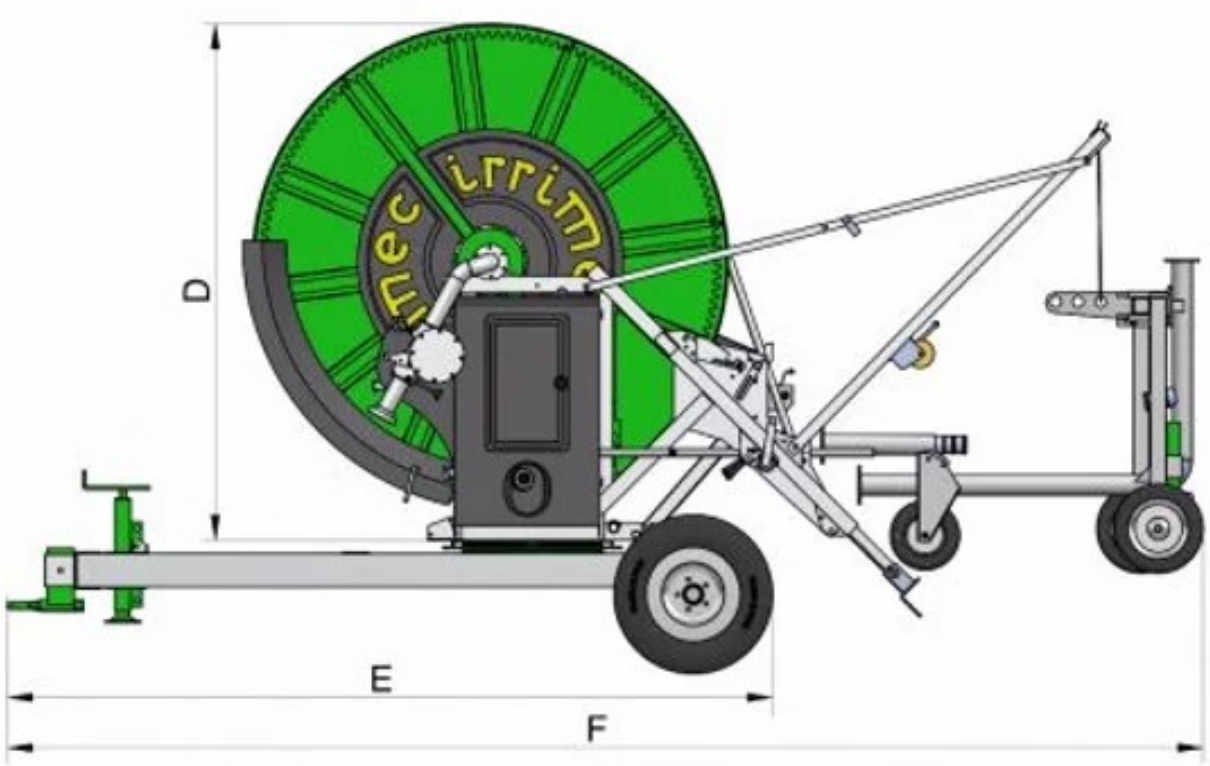



PET	"A"	"B"	"C"	"D"	"E"	"F"
Ø75/350-Ø75/430-Ø82/350-Ø82/400-Ø90/300-Ø100/240	*1650 - 1900*	*2050 - 2180*	*2905*	*2310*	*3422 ± 10*	*5347 ± 100*
Ø90/320-Ø90/340	*1650 - 1900*	*2050 - 2180*	*2921*	*2326*	*3422 ± 10*	*5347 ± 100*
Ø100/270-Ø100/300 (T.25/120)	*1650 - 1900*	*2050 - 2180*	*2924*	*2329*	*3422 ± 10*	*5347 ± 100*
Ø110/230 (T.25/120)	*1650 - 1900*	*2050 - 2180*	*2929*	*2334*	*3422 ± 10*	*5347 ± 100*