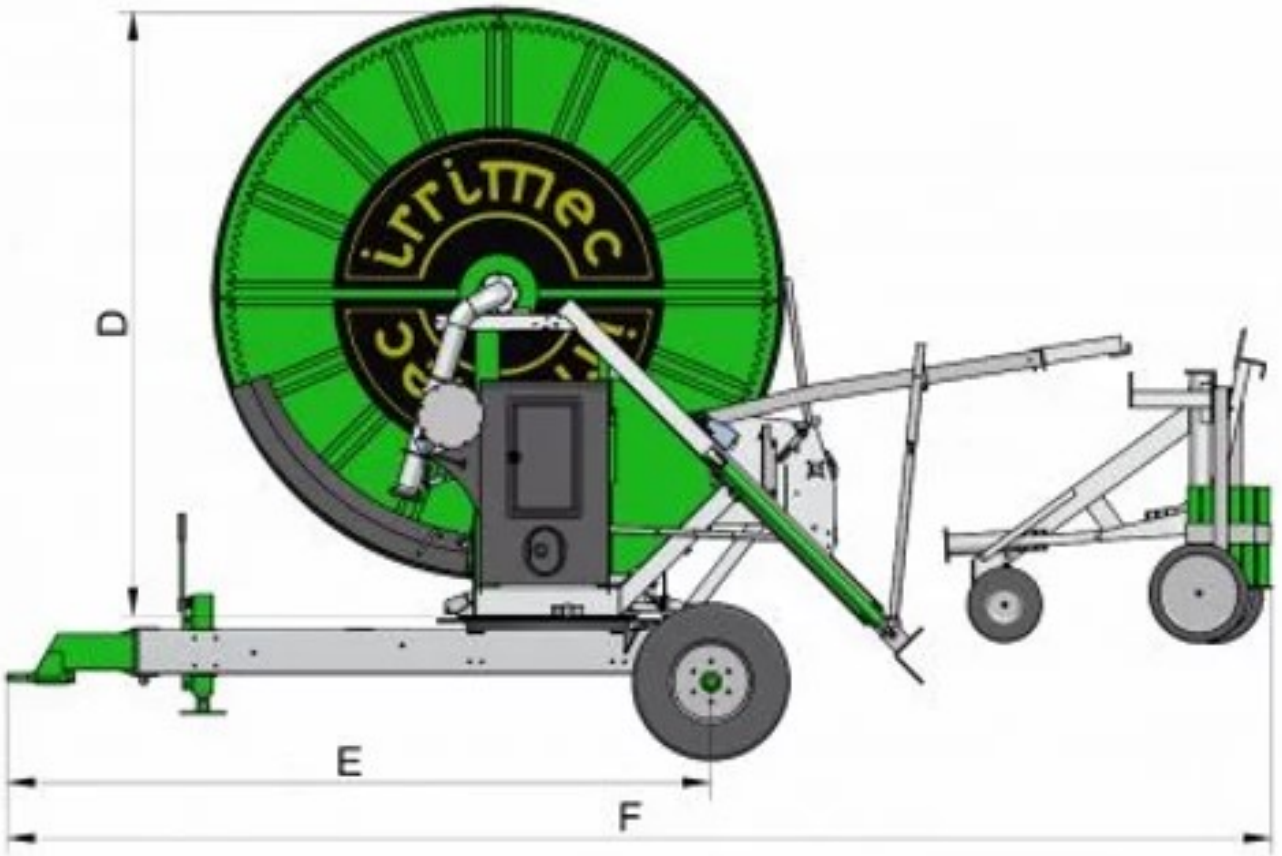



PET	"A"	"B"	"C"	"D"	"E"	"F"
Ø90/600 - Ø90/650 - Ø100/530 - Ø125/350 - Ø125/380	*2190 - 2350*	*2511 - 2670*	*3777*	*3050*	*3553 ± 10*	*6382 ± 100*
Ø100/600	*2190 - 2350*	*2511 - 2670*	*3812*	*3085*	*3553 ± 10*	*6382 ± 100*
Ø110/480-Ø110/500	*2190 - 2350*	*2511 - 2670*	*3802*	*3075*	*3553 ± 10*	*6382 ± 100*
Ø110/530-Ø110/550 - Ø 135/350	*2190 - 2350*	*2511 - 2670*	*3893.*	*3166*	*3553 ± 10*	*6382 ± 100*
Ø120/400-Ø120/420	*2190 - 2350*	*2511 - 2670*	*3816*	*2989*	*3553 ± 10*	*6382 ± 100*