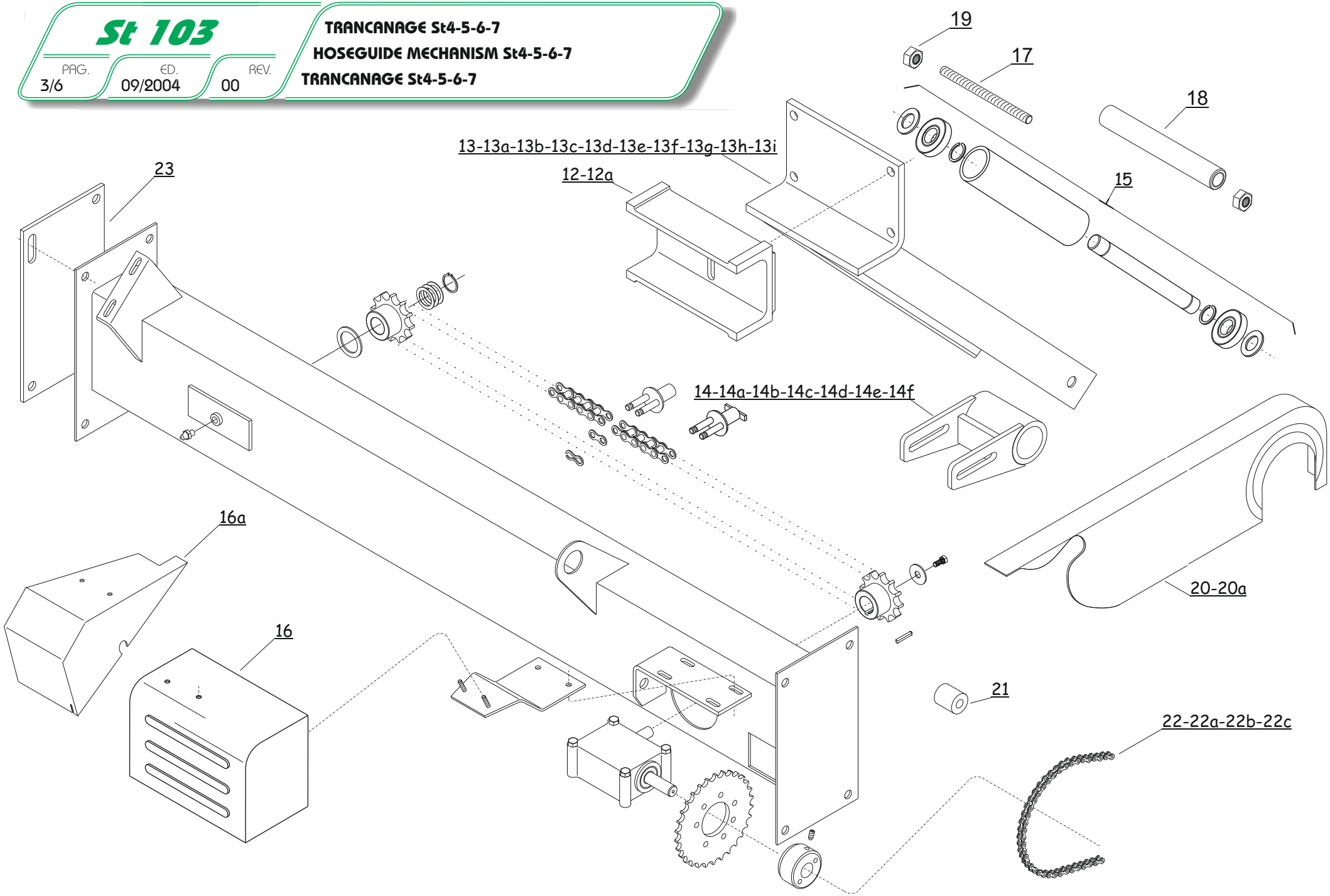
19
17
18
13-13a-13b-13c-13d-13e-13f-13g-13h-13i
12-12a
23
15
14-14a-14b-14c-14d-14e-14f
16a
20-20a
16
21
22-22a-22b-22c