OUR ENERGY – YOUR SUCCESS

BEVI Electric motors, IEC 56-400

Installation and service instruction



BEVI AB, Bevivägen 1, 384 30 Blomstermåla, Sweden | +46 (0)499-271 00 | info@bevi.se | www.bevi.com

Every care has been taken to ensure the accuracy of the information contained in this publication.

Due to BEVI's policy of continuous development and improvement, BEVI reserves the right to supply products which may differ slightly from those illustrated and described in this manual.

Descriptions and technical features listed in this manual may not to be considered as binding. Under no circumstances should be considered as a contractual obligation.

The data in this manual may change without prior notice.

Table of content

1 Technical description....4
1.1 General....4
1.2 Enclosure (degree of protection)....4
1.3 Cooling....4
1.4 Insulation....4
1.5 Voltage and frequency....4
1.6 Surface....4
1.7 Terminal box and terminals....4
1.8 Motor dewatering (drain holes)....4
2 Standards....5
3 Safety information....5
4 Handling....5
4.1 Reception of motor....5
4.2 Transport and storage....5
4.3 Lifting of motors....5
5 Installation and commissioning....6
5.1 General....6
5.2 Foundation....6
5.3 Bearings....6
5.4 Insulation resistance....6
5.5 Balancing....6
5.6 Mounting of the motor....6
5.6.1 Coupling drives....6
5.6.2 Belt drives....7
5.6.3 Drain plugs....7
5.7 Electrical connection....7
6 Connecting options....7
6.1 Direct on-line (DOL) start....7
6.2 Star/Delta (Y/D) start....7
6.3 Frequency inverter operation....8
6.3.1 Motor cooling....8
6.3.2 Thermal protection....8
6.3.3 Bearing currents....8
6.3.4 EMC and cables....8
7 Checklist at motor start-up....9
8 Maintenance....9
8.1 Service of motor during operation....9
8.2 Periodical inspections....9
8.3 Bearings and lubrication – general....10
9 Options....11
9.1 Thermo contacts....11
9.2 Thermistors (PTC)....11
9.3 PT100 sensors....11
9.4 Forced ventilation (IC416)....11
9.5 Anti-condensation heaters....12
9.6 Motor winding anti-condensation....12
9.7 Mechanical brake....12
10 Specific motor data....13
10.1 Exploded views....13
10.2 Tightening torque....14
10.3 Type Sh, 2SIE, 3SIE, SEMh....14
10.3.1 Construction....14
10.3.2 Bearings....14
10.3.3 Lubrication interval....15
10.4 Connection diagrams Sh, 2SIE, 3SIE, SEMh....17
10.5 Type 4A, 4A2, 4A3, 4D, 4D2 and 4D3..20
10.5.1 Construction....20
10.5.2 Bearings 4A, 4A2, 4A3, 4D, 4D2 and 4D3 20
10.6 Type 3D, 3D2, 3D3....21
10.6.1 Construction....21
10.6.2 Bearings 3D, 3D2, 3D3....21
10.6.3 Lubrication interval....22
10.7 Connection diagrams 3D, 3D2, 3D3, 4A, 4A2, 4A3, 4D, 4D2 and 4D3....23
11 Troubleshooting....24

1 Technical description

The persons who are in contact with the motor when installing, operating or maintaining it must follow this manual. Only qualified personnel are allowed to handle the motor. If this – including health and safety regulations – are not followed, no warranty issues will be approved by BEVI.

1.1 General

This manual covers BEVI asynchronous surface-cooled induction three phase motors, single and multiple speed as well as single-phase motors. The motor´s technical specifications are available on www.bevi.com.

All BEVI motors meets the requirements of ISO-standards and also the IEC regulations and recommendations available.

If not given otherwise the rated powers are valid for continuous S1 duty, at given supply voltage and frequency, ambient temperature up to +40°C and for motor setting up to an altitude of 1000m above sea level. The motors are for fixed installation only.

1.2 Enclosure (degree of protection)

Motors are produced with degree of protection class IP55 as standard. Motors can, without special enclosure modifications, be installed outdoors and the standard paint finish is also suitable. However, for harsh environments and climatic conditions we recommend a special paint finish. Motors mounted with shaft vertically down should be protected by a canopy (rain cap) fitted over the fan cowl to prevent water from following the motor shaft into the motor. For the same reason motors mounted with shaft vertically up should be protected so that water cannot penetrate down the motor shaft. Customized motors can be ordered for IP56, IP65 or IP66 as well.

1.3 Cooling

As standard, cooling is supplied by a fan fitted onto the non-drive (ND) end shaft extension (standard designation IC411). Other cooling methods can be supplied, for example a separate blower (IC416 – forced cooling) fan which is commonly required for inverter driven motors.

1.4 Insulation

All motors conform to the insulation class F, unless the mark plate says differently. Motors with Class F can normally be used in wet and dry tropical climate conditions. If the motor needs to comply with especially tough demands it can be made in special executions for wet alternative dry tropical climate conditions, higher ambient temperatures etc.

As an option the motor can be delivered with class H insulation.

1.5 Voltage and frequency

BEVI motors are produced for frequencies of 50 and 60 Hz and all standard voltages up to 690 V. Please look on your motor data plate for actual voltage and frequency. The mains supply voltage can vary by up to ± 5% without affecting the rated motor efficiency according to IEC60034-1. The motor is produced for full load duty with combined variation of voltage and frequency up to ±10%.

1.6 Surface

BEVI motors are as standard finished in a blue enamel paint, industrial quality RAL 5010.

1.7 Terminal box and terminals

Motors in the basic execution have six terminals in the terminal box, connected to the stator windings. Multiple speed motors are provided with six or more terminals. The designation of terminals and connection diagram are given on a plate arranged inside the cover of the terminal box.

Motors with thermal protection or with heaters have separate terminals inside the terminal box. There can also be cases when an additional connection strip is provided for connection of this equipment.

1.8 Motor dewatering (drain holes)

Depending on motor size and motor group most of the BEVI motors have drain holes for dewatering the interior of the motor when so is

needed. The holes are plugged with a screw or rubber plug and can be removed when needed.

Type Sh, 2SIE, 3SIE and SEMh has drain holes on sizes 56-80 and 132-315.

Type 3D, 3D2 and 3D3 has drain holes from size 250 and up.

All other motors can be ordered with drain holes when required.

2 Standards

Motor construction, dimensions and outputs comply with the International Standards IEC 60034-1 and IEC 60072-1.

3 Safety information

To avoid accidents during installation, service and inspections of the motor the following work safety principles must be observed:

- The motor must be installed by a qualified electrician, in accordance with the generally in force electrical code principles and regulations.
- Be observant that the motor can have a hot surface, both during operation and after shut-down.
- In no case may the motor operate without protective guards foreseen by the motor construction.
- The coupling or belt drive must be shielded properly protected against touching.
- The motor must be suitably earthed.
- Cables and supply conductors must be properly protected against damaging.
- Do not open terminal box when energized.

Inspections, maintenance or repairs can be done only upon order and under supervision by appropriately qualified and trained staff in the line of work safety regulations.

Inspections and repairs must take place when the motors are safely disconnected from the mains.

4 Handling

4.1 Reception of motor

When the motor has arrived, directly check the motor for damages that could have occurred during the transport.

After that, be ensured that correct motor has been delivered by checking motor data plate – type description, power, speed, connection, voltage, frequency etc.

4.2 Transport and storage

The motors can be forwarded in any covered transport means free of violent shocks or blows.

Motors with NU roller bearings should have the shaft secured during transport.

Storage of motors can take place in rooms in which:

- max. relative humidity does not exceed 80% at +20°C,
- ambient temperature ranges from -10°C to +40°C, non-condensing.
- there is no access of dusts, gases and caustic vapours as well as other corroding chemical fumes destructive to insulation or casing,
- no vibrations occur

On the stored motors the machined surfaces should be protected against atmospheric influences by coating them with thick grease or easily removable anticorrosive lacquer. When stored the shaft should be rotated periodically in order to exercise bearings and grease.

4.3 Lifting of motors

Motors are heavy, when lifting or handling the motor – make sure that no person risks to come under the lifted motor.

BEVI motors with a weight over 25 kg are supplied with lifting eye or similar. The lifting eye is dimensioned to lift the motor, if the motor is mounted on other equipment, the motor´s lifting eye must not be used.

Before lifting the motor – check that the lifting eye and threaded parts are undamaged. When this is checked, make sure that the lifting eye is tightened.

5 Installation and commissioning

5.1 General

Check the motor data plate to confirm that cables and overload protections are correctly dimensioned.

5.2 Foundation

The end user is responsible for the foundation where the motor will be mounted.

The foundation will be dimensioned to withstand occurring vibrations and forces.

5.3 Bearings

Before the motor is set up on site, remove bearing protections (if such are provided).

For motors with regreaseable bearings the grease quality shall be checked when the motors have been stored for a period longer than six (6) months. In such case it is best to change the grease using the grease stated in chapters Lubrication interval. It's also possible to use equivalents of these greases. When changing the grease grade the bearings are to be washed with a proper bearing cleaning liquid and dried thoroughly.

5.4 Insulation resistance

Before the motor is set up measure the insulation resistance to frame: The lowest recommended insulation resistance at a winding temperature of approx. 20°C should amount to minimum 20 MΩ for size 56-80, 10 MΩ for size 90-180 and 5 MΩ for size 200-400 (greater than 100 MΩ is recommended before start-up of motor).

If the measured insulation resistance is lower the motor must be subjected to drying. During the drying process the conditions should be such that the humidity is removed from the windings i.e. at least the terminal box cover must be removed to facilitate the air exchange within the motor.

If drain plugs are mounted, remove them during the drying process. The drying temperature must not exceed 100°C.

After the drying process the insulation resistance will be measured again. Remember to remount the drain plugs.

During and directly after measuring the insulation resistance, harmful voltage is present in the terminals. Therefor it is forbidden to touch them. To neutralize the voltage it is necessary to ground the frame and each winding grounded to the frame.

5.5 Balancing

The rotor is dynamically balanced. The balancing has been done with a half-key fitted to the shaft, according to IEC 60034-14.

5.6 Mounting of the motor

5.6.1 Coupling drives

Since the rotor is dynamically balanced, the balancing has been done with a half-key fitted to the shaft. This means that, in order to avoid vibrations, coupling halves and pulleys shall be balanced with a half-key, after the making of the keyway.

The installed motor shaft centre line may show a misalignment of up to 0,1mm with respect to that of the driven machine shaft. As reference the clearance (a) of min. 1mm must be allowed between the coupling halves. For sizes 315-400 the minimum value is 1,5mm. See Figure 1 below.

For further information it is recommended to follow the coupling supplier´s instructions.

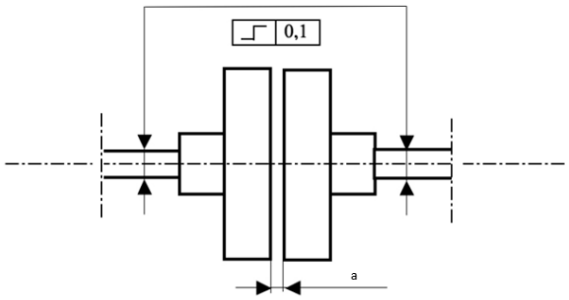

Figure 1. Using coupling on motor shaft.

5.6.2 Belt drives

For belt drives the belts must be tightened according to the supplier of the driven equipment.

Be certain not to exceed the maximum radial load of the bearing. Otherwise it leads to reduced lifetime of bearings and overloading of the shaft.

5.6.3 Drain plugs

Depending on motor size and motor group most of the BEVI motors have drain holes for dewatering the interior of the motor when so is needed. The holes are plugged with a screw or rubber plug and can be removed when needed.

Type Sh, 2SIE, 3SIE and SEMh has drain holes on sizes 56-80 and 132-315.

Type 3D, 3D2 and 3D3 has drain holes from size 250.

All other motors can be ordered with drain holes when required.

5.7 Electrical connection

The motor must be earthed on at least one of the earth terminals on the motor.

In the normal three phase, single speed motor the terminal box contains a terminal board with six terminals, and an earth terminal in the housing. If the motor is equipped with options like thermo contacts, PTC thermistors or heaters, there are extra terminals for this purpose inside the terminal box.

The cable entries – normally metric threads – must at least have the same IP class as the motor. The cable gland will be dimensioned to get a good fit to the cable.
Unused cable gland holes on the terminal box must be sealed in order to maintain correct IP protection class.

After the motor has been electrically correctly connected with correct cables and cable lugs, tightened the terminal nuts with correct tightening torque according to Table 3, mount the terminal box lid correctly, so the rubber seal will stop water and dust from penetrating the electrical parts inside.

The motor must be installed in accordance with the generally in force principles and regulations by a qualified electrician.

6 Connecting options

6.1 Direct on-line (DOL) start

All BEVI motors are designed to be started – with full nominal load – direct on line.

For three phase single speed motors the motor can – depending on voltage supply – be connected Y (star) or D (delta) for correct use of the motor.

For two speed motors, single speed motors or other special motors there are other conditions to consider when connecting the motor. Normally the connection diagram is presented inside the terminal box lid. You can also look in Chapter 10 – Specific motor data – for correct connection diagram.

6.2 Star/Delta (Y/D) start

The Y/D starting method can be used when the supply voltage has the same value as the motor when using D connection.

All connection jumpers on the motor terminal must be removed.

When in need of a low starting current and when a low starting torque can be accepted (approx. 20-30% of the direct start values) a Y/D-starter can be used as starting method.

At Y/D-start method all connector jumpers on the terminals must be removed to give room for a suitable Y/D-starter. BEVI can provide such switches, www.BEVI.com.

Nominal supply voltage U_n	Motor power < 75kW	Motor power ≥ 75kW
Un < 500V	Use a standard motor	Standard motor with insulated bearing / bearing end shield on ND side
Un ≥ 500V	Motor with reinforced insulation	Motor with reinforced insulation + insulated ND bearing / bearing end shield. OR Standard motor with insulated ND bearing / bearing end shield + dU/dt filter

Table 1. Motor selection when using BEVI frequency inverters.

6.3 Frequency inverter operation

In general, all BEVI three phase single speed motors can work with frequency Inverters. The insulation system in modern electric motors is dimensioned to withstand the peaks from the Inverter.

What type of Inverters and motors to choose depends on motor load, speed control range, ventilation/cooling method.

6.3.1 Motor cooling

Pay attention when running the motor at lower speed without forced cooling (IC 416). As a general rule, speeds below 50% of the nominal speed on the motor during longer periods leads to a high risk of overheating the motor, since the internal motor fan doesn't rotate fast enough to maintain the necessary cooling degree. Depending on ambient temperature, motors with full load and duty point below 25Hz and higher than 70Hz are normally in need of forced cooling.

6.3.2 Thermal protection

For the reason mentioned in chapter 6.3.1 it is highly recommended to equip the motor with thermal protectors (like PTC thermistors or thermo contacts) and connect it to the frequency Inverter.

6.3.3 Bearing currents

For bigger motors from 75kW and up BEVI normally recommends the use of insulated bearing on the NDE (Non Drive End) of the motor in order to prevent bearing currents that can occur when controlling the motor with a BEVI frequency inverter. More detailed data can be viewed in *Table 1*. Other brands of frequency inverters supplying the BEVI motor, BEVI gives no recommendations, *Table 1* can only be used as guideline.

6.3.4 EMC and cables

To fulfil the EMC directive, both EMC cable glands and shielded cables must be used the whole way between the Inverter and the motor, also signal cables must be handled the same way. Be assured that the cable shield will be properly grounded in all ends.

7 Checklist at motor start-up

Before putting the motor into service:

- remove all unnecessary objects from the close surroundings of the motor,
- clean the motor and driven object,
- check whether a free cooling air intake to the fan is ensured,
- check the electrical installation, the circuit breaker, measuring instruments and other auxiliary and protection equipment for correct operation,
- check all the fixing screws and cable connections for safe tightening as well as all elements critical for the motor protection grade,
- check the effectiveness of earthing,
- check whether the set is ready for start-up,
- carry out a test run.

During test run of the set, check:

- line voltage,
- current,
- motor rotating in the correct direction,
- effectiveness of motor cooling and correct coupling with driven object,
- whether abnormal vibrations or other malfunctions of the motor are present,
- temperature rises of respective motor elements, such as bearing shields, bearings, frame.
- starting-up equipment elements, control and protection devices, for correct operation.
- electrical parameters attained by the motor and evaluate the correctness of motor type selection.

After reaching operating temperature, it is recommended to tighten all electrical connections once more. If the motor operates under conditions were vibrations are unavoidable, the electrical connection should be checked regularly, and be connected with a cable with multi stranded core. After the above recommended procedures are accomplished and correct operation of the drive motor and driven machine is attained, the motor may be regarded as commissioned after installation.

8 Maintenance

8.1 Service of motor during operation

During motor operation carry out the following routine checks:

- motor for correct operation.
- motor cooling effectiveness.
- bearings for correct operation - no knocks or whistle are permitted, after approximately 10 hours of running after start-up.
- whether any abnormal vibrations are present.
- motor and driven object coupling condition.
- whether the current consumption [A] is within the rated value (nominal current).

The motor must be immediately stopped, when:

- abnormal temperature rise of the motor frame is started.
- fume or smell of burning get out of the motor or installation.
- motor fan is damaged.
- driven object is damaged.
- for any other reason, when starting-up of motor and driven object is hazardous to the environment.

Restart of the motor is permitted only after all stated faults are rectified.

8.2 Periodical inspections

To maintain the full technical efficiency of the motor, all malfunctions stated during motor operation must be solved and corrected immediately.

Apart from the above rule, each motor in operation should be subjected to the following periodical inspection procedures:

1. Minor inspection every 6 month (if the motor operates in a dusty room, every 3 month or even more frequently).
2. Major inspection.

The minor inspection of motor could cover the following procedures:

- external visual inspection and motor cleaning.
- measurement of stator winding insulation resistance performed with a 500 V megger.
- checking of all contacts and fixing screws for safe tightening.
- inspection of supply mains cable and earthing conductors.

When signs of wear are noticed during the minor inspection, the major inspection must be performed. Depending of type of wear found the major inspection could cover the following procedures:

- dismantling of motor.
- removal of rotor.
- inspection of stator with particularly attention to the condition of windings.
- winding insulation resistance measurement.
- inspection of rotor.
- inspection of bearings, exchange of grease in the bearing chambers if necessary. (motors with open bearings).
- inspection of start-up-, protection- and control equipment.

All faults stated during the inspection must be removed and used-up parts must be replaced with new ones. It is recommended to renew the protective coatings.

During major inspection and eventual repair, be sure the technical requirements quoted in the motor rating plate are met.

It is recommended to subject the motor to curtailed tests. Please contact BEVI for further information. BEVI can also assist with the curtailed tests.

8.3 Bearings and lubrication – general

BEVI motors are normally fitted with ball bearings series 62 & 63. Bigger 4-, 6-, 8-pole motors in foot respectively foot/flange execution can be ordered with series NU roller bearings on DE side. For further information, see Chapter 10 Specific motor data.

The values of admitted radial and axial forces of the shaft, which can be obtained from BEVI, have been calculated at the assumption of some 20000-30000 work hours for the bearings, depending on type.

In case of heavy work conditions and at high radial forces acting on the shaft end the ball bearing at the drive (DE) side can be replaced with a roller bearing series NU3 or NU2 of the same dimensions, if the motor is a 4-, 6- or 8-poled horizontally mounted motor.

For vertically mounted motors with high axial loads, conical bearings type 7xxx is recommended on drive (DE) side.

The wave washer on a standard BEVI motor is normally placed at the NDE side.

Motors with regreaseable bearings are filled with grease - including the bearing chambers - and are ready for operation. However, it is a good idea to give the bearings some more grease during the first run of the motor.

Refilling of bearings with grease should be accomplished during motor operation by means of a grease gun through the grease nipples arranged at the bearing shields. Before refilling the bearings with grease, clean the grease nipples thoroughly.

Regreasing instruction during operation:

- Remove the grease outlet plugs or screws on both Drive End (DE) and Non Drive End (NDE) side. If necessary – stop the motor and remove the fan cover to reach the grease nipple and grease outlet.
- Clean the grease nipples.
- Inject correct amount of grease into the nipple.
- Let the motor run for 1 hour.
- Clean off the excess grease from the grease outlets and close them with the plugs or screws.

Be aware of rotating parts during regreasing operation!

9 Options

9.1 Thermo contacts

Thermo contacts can as an option be mounted into the motor´s windings. Normally one thermo contact for each winding. The three thermo contacts are internally connected in serial, so only two wires will be present in the terminal box.

The function for a thermo contact is normally closed (NC), when the temperature of the winding reaches the rated temperature of the thermo contact bimetal, the contact opens and the contactor connected to the motor and thermo contact will cut off the power to the motor.

A normal temperature for the thermo contact is 140°C or 150°C ± 5K.

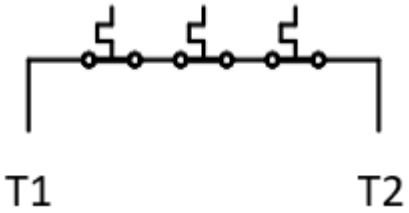

Figure 2. Thermo contact connection. Normally the wires are marked T1-T2 or P1-P2.

9.2 Thermistors (PTC)

Just like the thermo contact the PTC thermistor can be ordered as an option. The PTC thermistor is normally mounted one per winding, internally connected in serial, leading to only two wires appearing in the terminal box.

The PTC thermistor needs to be connected to a thermistor relay, BEVI can supply such material, or when using a frequency inverter, a multifunction contact can be used for controlling the signal from the PTC thermistor.

A normal temperature for the PTC thermistor is 140°C or 150°C.

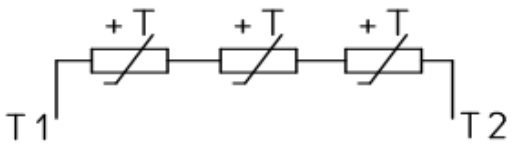

Figure 3. PTC thermistor connection. Normally the wires are marked T1-T2 or P1-P2.

9.3 PT100 sensors

Just like the thermo contact the PT100 can be ordered as an option. The PT100 is normally mounted one per winding. For bigger motors PT100 sensors are mounted near each bearing. Each PT100 sensor cable sets are monitored separately. Normal calibration level for BEVI motors for windings are +140°C and +85°C for bearings.

9.4 Forced ventilation (IC416)

Under normal circumstances, the shaft mounted motor fan supplies the electric motor with sufficient airflow to cool the motor down. But when the motor is supplied by a frequency inverter, the motor speed may be too slow to provide sufficient cooling. The solution is to put a forced ventilation at the back of the motor, replacing the shaft-mounted fan.

The motor and forced ventilation shall be connected according to the wiring diagram inside the terminal box. The forced ventilation shall be connected to a fixed frequency power source to work correctly.

There can be a separate terminal box for the forced ventilation, or a separate terminal inside the motor terminal box.

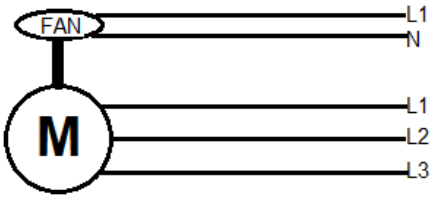

Figure 4. Example of single phase forced cooling connection.

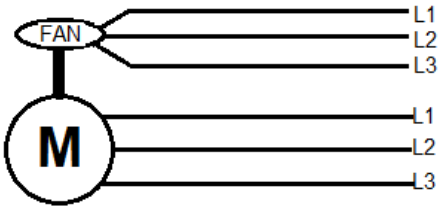

Figure 5. Example of three phase forced cooling connection.

9.5 Anti-condensation heaters

Anti-condensation heaters are used in cases of a risk of condensation inside the motor. This can occur during long-time standstill of a cold motor in humid air, or intermittent duty where the working motor is having long periods of standstill. In this case the temperature variation inside the motor makes the air to condensate.

The anti-condensation heater is used to heat the inside of the motor, in order to prevent humidity during standstill.

The anti-condensation heaters shall be connected according to the wiring diagram inside the terminal box, separate power supply.

Do not power the heater while the motor is in operation, only when the motor is at standstill.

9.6 Motor winding anti-condensation

The motor winding can be used as motor heater if a low AC voltage between two winding terminals is available. The value of heating voltage supply depends on motor size and nominal voltage, see Table 2 below.

Frame size	Motor winding heating voltage at different rated motor voltages.				
	230V [V]	400V [V]	440V [V]	525V [V]	690V [V]
100	15	30	35	45	60
112	15	30	35	45	60
132	15	30	35	45	60
160	15	25	30	35	45
180	15	20	25	30	40
200	13	20	25	30	40
225	13	20	25	30	40
250	10	15	20	25	35
280	-	15	20	25	30
315	-	15	20	25	30
355	-	14	18	22	27
400	-	14	18	22	27

Table 2. Motor winding heating voltage at different rated motor voltages.

9.7 Mechanical brake

The mechanical brake is in braking mode at power-off (the motor shaft is locked), when turning the voltage on, the brake releases and the motor shaft is rotating freely.

The motor and DC brake shall be connected according to the wiring diagram inside the terminal box. The DC brake coil shall be connected to a fixed frequency power source to work correctly, for example when the motor is running with a frequency inverter.

The brake torque is correct adjusted at delivery, after a while the air gap for the brake disc may need to be adjusted to work properly.

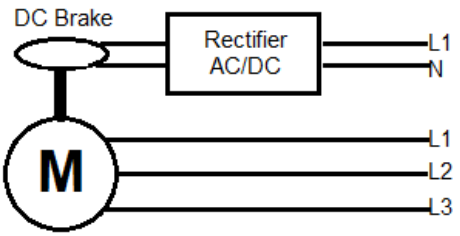

Figure 6. Example of DC brake motor connection.

To work safely, the DC brake must have correct voltage supply at all times.

10 Specific motor data

10.1 Exploded views

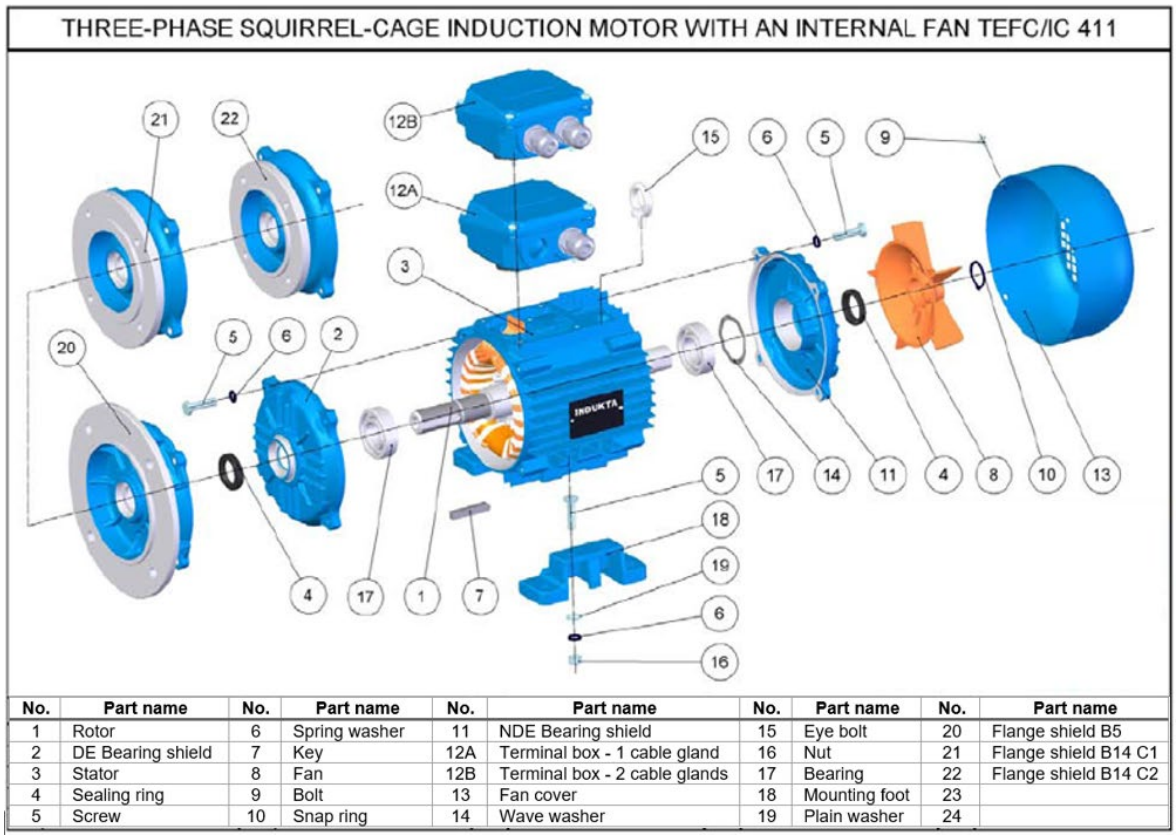

No.	Part name	No.	Part name	No.	Part name	No.	Part name	No.	Part name
1	Rotor	6	Spring washer	11	NDE Bearing shield	15	Eye bolt	20	Flange shield B5
2	DE Bearing shield	7	Key	12A	Terminal box - 1 cable gland	16	Nut	21	Flange shield B14 C1
3	Stator	8	Fan	12B	Terminal box - 2 cable glands	17	Bearing	22	Flange shield B14 C2
4	Sealing ring	9	Bolt	13	Fan cover	18	Mounting foot	23	
5	Screw	10	Snap ring	14	Wave washer	19	Plain washer	24	

Picture 1. Typical exploded view of motors with sealed bearings.

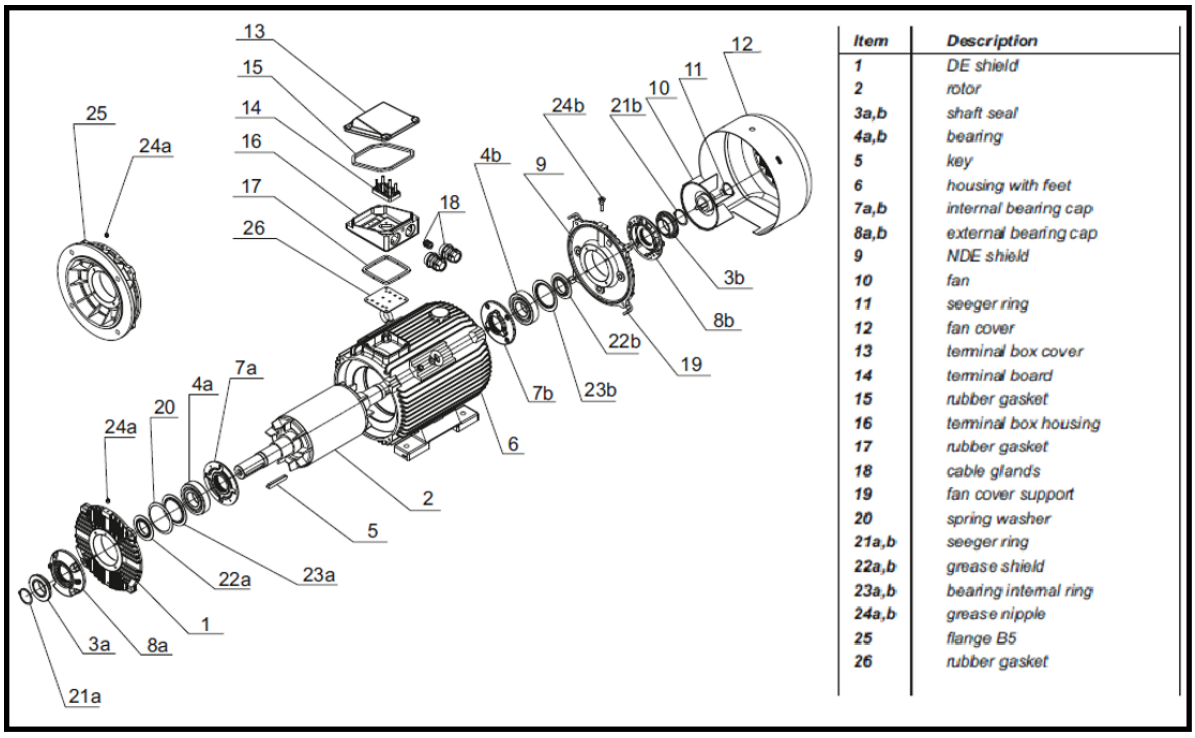

Item	Description
1	DE shield
2	rotor
3a,b	shaft seal
4a,b	bearing
5	key
6	housing with feet
7a,b	internal bearing cap
8a,b	external bearing cap
9	NDE shield
10	fan
11	seeger ring
12	fan cover
13	terminal box cover
14	terminal board
15	rubber gasket
16	terminal box housing
17	rubber gasket
18	cable glands
19	fan cover support
20	spring washer
21a,b	seeger ring
22a,b	grease shield
23a,b	bearing internal ring
24a,b	grease nipple
25	flange B5
26	rubber gasket

Picture 2. Typical exploded view of motors with regreaseable bearings.

10.2 Tightening torque

	M5	M6	M8	M10	M12	M16	M18	M20	M22	M24
Electrical connection [Nm]	2,5	4	8	12	20	40	-	-	-	-
Max torque for foot mounting [Nm]	5	8	22	45	75	91	119	150	184	282

Table 3. Tightening torque for electrical connections and foot mounting.

10.3 Type Sh, 2SIE, 3SIE, SEMh

10.3.1 Construction

Size	56 - 80	90 - 112	132	160 - 315
Stator frame	Aluminium	Aluminium	Aluminium	Cast iron
Flanges (B5, B14)	Aluminium	Cast iron	Cast iron	Cast iron
End shields	Aluminium	Aluminium	Cast iron	Cast iron

Table 4. Sh, 2SIE, 3SIE, SEMh construction materials.

10.3.2 Bearings

Frame size	Bearing type	Comments
56	6201 2Z	Sealed bearings. Two bearings per motor. No lubrication necessary. Exchange when needed.
63	6202 2Z	
71	6203 2Z	
80	6204 2Z	
90	6205 2Z C3	
100	6206 2Z C3	
112	6306 2Z C3	
132	6308 2Z C3	
160	6309 2Z C3	
180	6311 2Z C3	

Table 5. Bearing types for sizes 56-180.

Frame size	Bearing D-end 2-poles	Regrease bearing [gram]	Replace bearing grease [gram]	Bearing ND-end 2-poles	Regrease bearing [gram]	Replace bearing grease [gram]
200	6312 C3	20	100	6312 C3	20	100
225	6313 C3	23	120	6313 C3	23	120
250	6315 C3	30	170	6315 C3	30	170
280	6315 C3	30	170	6315 C3	30	170
315S, MA, MB	6315 C3	30	170	6315 C3	30	170
315MC	6316 C3	35	200	6316 C3	35	200

Table 6. Bearing types and grease amount for sizes 200-315, 2-pole motors.

Frame size	Bearing D-end 4-6-8-poles	Regrease bearing [gram]	Replace bearing grease [gram]	Bearing ND-end 4-6-8-poles	Regrease bearing [gram]	Replace bearing grease [gram]
200	6312 C3	20	100	6312 C3	20	100
225	6313 C3	23	120	6313 C3	23	120
250	6315 C3	30	170	6315 C3	30	170
280	6318 C3	40	260	6318 C3	40	260
315S, MA, MB	6318 C3	40	260	6318 C3	40	260
315 MC, MD	6320 C3	50	300	6318 C3	40	260

Table 7. Bearing types and grease amount for sizes 200-315, 4-6-8-pole motors.

10.3.3 Lubrication interval

Motor sizes 56-180 are equipped with permanently greased bearings and are in no need of regreasing. Motors sizes 200-315 are to be serviced according to *Table 8* below.

Frame size	Regrease or replace	Speed 3600 rpm	Speed 3000 rpm	Speed 1800 rpm	Speed 1500 rpm	Speed 1000-1200 rpm	Speed <1000 rpm
200	Regrease	1100 h	1300 h	1700 h	2000 h	3300 h	3500 h
200	Replace	5500 h	8000 h	14500 h	17500 h	23000 h	25000 h
225	Regrease	1050 h	1250 h	1600 h	1900 h	3000 h	3300 h
225	Replace	5000 h	6500 h	13000 h	16500 h	22000 h	24000 h
250	Regrease	900 h	1100 h	1400 h	1600 h	2700 h	3000 h
250	Replace	4500 h	5000 h	9000 h	11500 h	15000 h	18000 h
280	Regrease	750 h	900 h	1200 h	1500 h	2500 h	2700 h
280	Replace	3750 h	4500 h	6000 h	8000 h	12500 h	15000 h
315	Regrease	750 h	900 h	1200 h	1500 h	2500 h	2500 h
315	Replace	3000 h	4000 h	5900 h	7600 h	11800 h	13000 h

Table 8. Time schedule for regrease/replacement of lubrication.

REMARKS

1. In case of motors operating in temperature above 40°C it's necessary to shorten mentioned above time of operation between regreasing and grease exchange.

2. Periods of regreasing in case of motors operating in vertical position should be shortened by 50% of the above intervals.

3. Periods of regreasing in case of motors with roller bearings (NU) should be shortened by 50% of the above intervals.

4. Lubrication quality/recommended grease:

Motortype 2Sg

Size 200-280

Renolit H443-HD 88 alt.
SKF LGWA2 or equal

Size 315

Renolit Duraplex EP2 alt.
SKF LGWA2 or equal

Motortype 2SIE/3SIE

Size 200-250

Renolit H443-HD 88 alt
SKF LGWA2 or equal

Size 280-315

Renolit Duraplex EP2 alt.
SKF LGWA2 or equal

10.4 Connection diagrams Sh, 2SIE, 3SIE, SEMh

Three phase motors

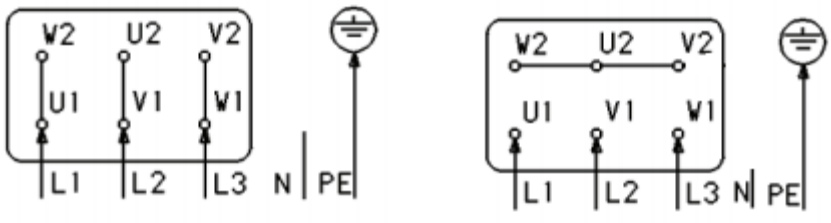

Connection in Δ (Delta) Connection in Y (Star)

Figure 7. Standard three phase single speed motor

Multiple speed motors

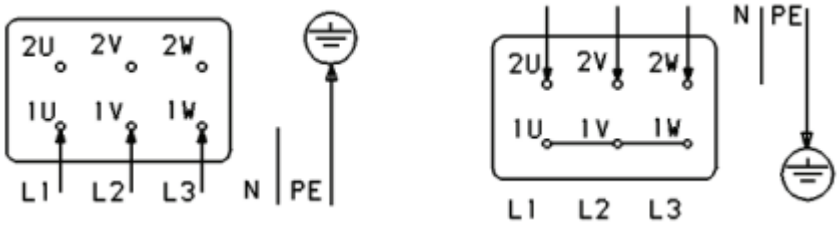

Low speed
Connection in Δ (Delta)

High speed
Connection in YY (Star-Star)

Figure 8. Three phase dual speed motor with single winding (Dahlander), like 4/2-, 8/4-, 12/6-pole.

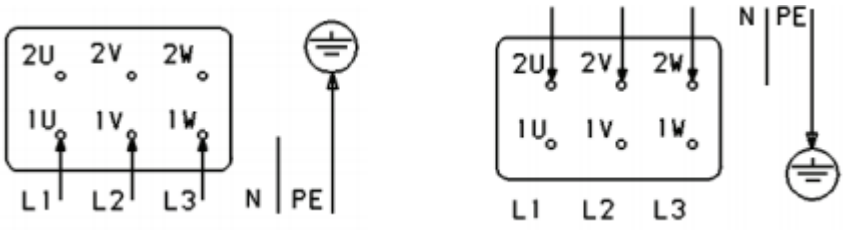

Low speed
Connection in Y (Star)

High speed
Connection in Y (Star)

Figure 9. Three phase dual speed motor with separate windings, like 6/4-, 8/6-pole.

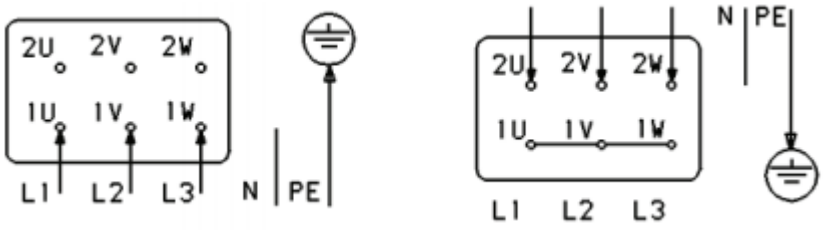

Low speed
Connection in Y (Star)

High speed
Connection in YY (Star-Star)

Figure 10. Three phase dual speed motor for ventilation application, with single windings (Dahlander), like 4/2-, 8/4-pole. Motor marked with "W" on the motor data plate.

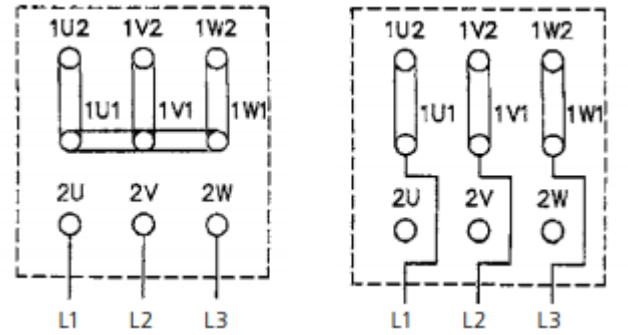

High speed
Connection in YY (Star-Star)

Low speed
Connection in Δ (Delta)

Figure 11. Three phase dual speed motor with single windings (Dahlander), like 4/2-, 8/4-pole. 9 terminals.

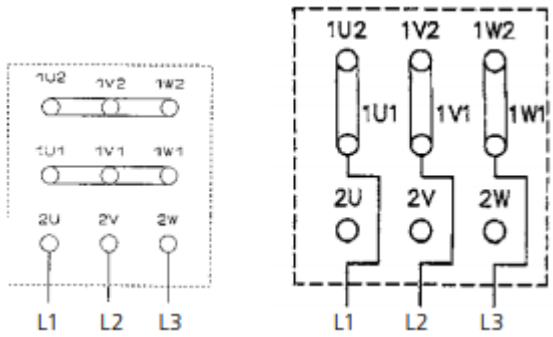

High speed
Connection in YY (Star-Star)

Low speed
Connection in Y (Star)

Figure 12. *Three phase dual speed* motor for *ventilation application, with single windings (Dahlander), like 4/2-, 8/4-pole. 9* terminals. *Motor marked with "W" on the motor data plate.*

Single-phase motors

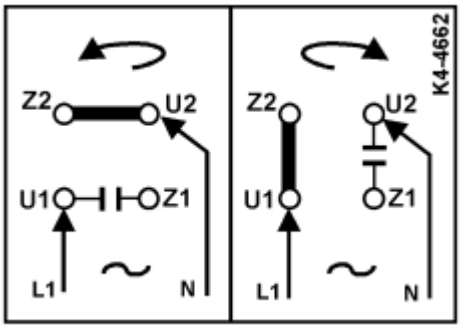

Figure 13. Single phase motor type SE(M)(K, L)h, with run capacitor.

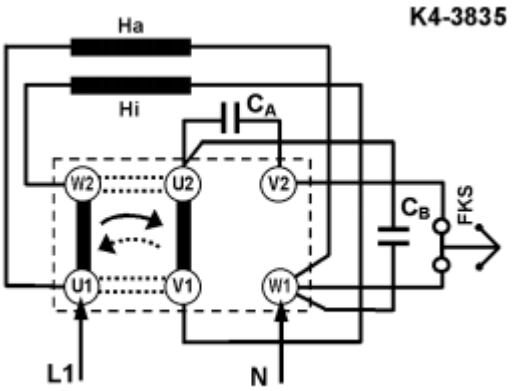

Figure 14. Single phase motor type SE(M)(K, L)h-F with Start capacitor C_A, run capacitor C_B and centrifugal switch.

10.5 Type 4A, 4A2, 4A3, 4D, 4D2 and 4D3

10.5.1 Construction

Type	4A 4A2 4A3		4D 4D2 4D3
Size	**56-132**	**160-180**	**80-355**
Stator frame	Aluminium	Aluminium	Cast iron
End shields	Aluminium	Aluminium	Cast iron
Flange	Aluminium	Cast iron	Cast iron

Table 9. 4A, 4A2, 4A3,4D, 4D2 and 4D3 motors construction materials

10.5.2 Bearings 4A, 4A2, 4A3, 4D, 4D2 and 4D3

Frame size	Bearing type	Comments
56	6201 2Z C3	Sealed bearings. Two bearings per motor. No lubrication necessary. Exchange when needed.
63	6202 2Z C3	
71	6203 2Z C3	
80	6204 2Z C3	
90	6205 2Z C3	
100	6206 2Z C3	
112	6306 2Z C3	
132	6308 2Z C3	
160	6309 2Z C3	

Table 10. Bearing types for sizes 56-160 for 4A, 4A2, 4A3, 4D, 4D2 and 4D3 motors.

Frame size	Bearing D-end 2-poles	Bearing ND-end 2-poles	Bearing D-end 4-6-8-poles	Bearing ND-end 4-6-8-poles
180	6311 C3	6311 C3	6311 C3	6311 C3
200	6312 C3	6312 C3	6312 C3	6312 C3
225	6313 C3	6313 C3	6313 C3	6313 C3
250	6314 C3	6314 C3	6314 C3	6314 C3
280	6314 C3	6314 C3	6317 C3	6317 C3
315	6317 C3	6317 C3	6319 C3	6319 C3
355	6319 C3	6319 C3	6322 C3	6322 C3

Table 11. Bearing types for sizes 180-355 for 4D, 4D2 and 4D3 motors.

10.6 Type 3D, 3D2, 3D3

10.6.1 Construction

Size	80-400
Stator frame	Cast iron
End shields	Cast iron

Table 12. 3D, 3D2 and 3D3 motors construction materials.

10.6.2 Bearings 3D, 3D2, 3D3

Frame size	Bearing type	Comments
80	6204 2Z C3	Sealed bearings. Two bearings per motor. No lubrication necessary. Exchange when needed.
90	6205 2Z C3	
100	6206 2Z C3	
112	6206 2Z C3	
132	6208 2Z C3	

Table 13. Bearing types for sizes 80-132 for 3D, 3D2 and 3D3 motors.

Frame size	Bearing D-end 2-poles	Bearing ND-end 2-poles	Bearing D-end 4-6-8-poles	Bearing ND-end 4-6-8-poles
160	6309 C3	6309 C3	6309 C3	6309 C3
180	6311 C3	6311 C3	6311 C3	6311 C3
200	6312 C3	6312 C3	6312 C3	6312 C3
225	6312 C3	6312 C3	6313 C3	6313 C3
250	6314 C3	6314 C3	6314 C3	6314 C3
280	6316 C3	6316 C3	6316 C3	6316 C3
315	6316 C3	6316 C3	6319 C3	6319 C3
355	6319 C3	6319 C3	6322 C3	6319 C3
400	6319 C3	6319 C3	NU326 ECM C3	6326 C3

Table 14. Bearing types for sizes 160-400 for 3D, 3D2 and 3D3 motors.

Frame size	Bearing D-end 2-poles	Bearing ND-end 2-poles	Bearing D-end 4-6-8-poles	Bearing ND-end 4-6-8-poles
160	7309BEP	6309 C3	7309BEP	6309 C3
180	7311BEP	6311 C3	7311BEP	6311 C3
200	7312BEP	6312 C3	7312BEP	6312 C3
225	7312BEP	6312 C3	7313BEP	6313 C3
250	7314BEP	6314 C3	7314BEP	6314 C3
280	7316BEP	6316 C3	7316BEP	6316 C3
315	7316BEP	6316 C3	7319BEP	6319 C3
355	7319BEP	6319 C3	7322BEP	6319 C3
400	7319BEP	6319 C3	2×7226BCBM	NU326 ECJ C3

*Table 15. 3D, 3D2 and 3D3 sizes 160-400 motors with heavy axial load in V1 vertical mounting position can as **option** be ordered with angular contact ball bearings.*

10.6.3 Lubrication interval

Frame size	Regrease bearing [gram]	3600 rpm	3000 rpm	1800 rpm	1500 rpm	1200 rpm	1000 rpm	500-900 rpm
160	20	3200	4200	6000	7000	8000	9000	10000
180	20	3200	4200	6000	7000	8000	9000	10000
200	25	1800	3100	5500	6500	7500	8500	9500
225	25	1800	3100	5500	6500	7500	8500	9500
250	35	800	2000	5000	6000	7000	8000	9000
280	35	800	2000	5000	6000	7000	8000	9000
315	50	800	2000	4600	5500	6500	7500	8000
355	60	400	1000	4000	5000	6000	7000	8000
400	60	400	1000	4000	5000	6000	7000	8000

Table 16. Lubrication intervals in duty hours [h].

Recommended grease: Mobil UNIREX N2, SKF LGWA2 or equal.

Mixing different greases is not recommended, as not all greases are compatible with each other.

10.7 Connection diagrams 3D, 3D2, 3D3, 4A, 4A2, 4A3, 4D, 4D2 and 4D3

Three phase motors

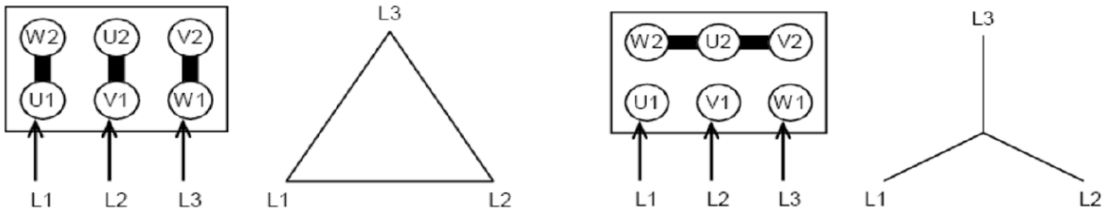

Multiple speed motors

Figure 15. Standard three phase single speed motor.

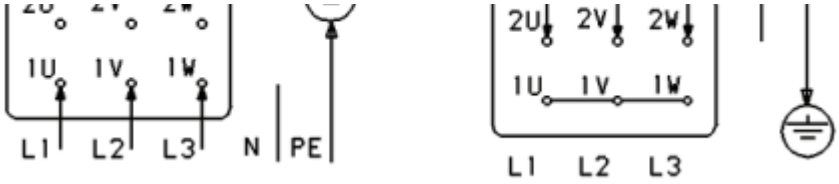

Low speed High speed

Figure 16. Three phase dual speed motor with single winding (Dahlander), like 4/2-, 8/4-, 12/6-pole.

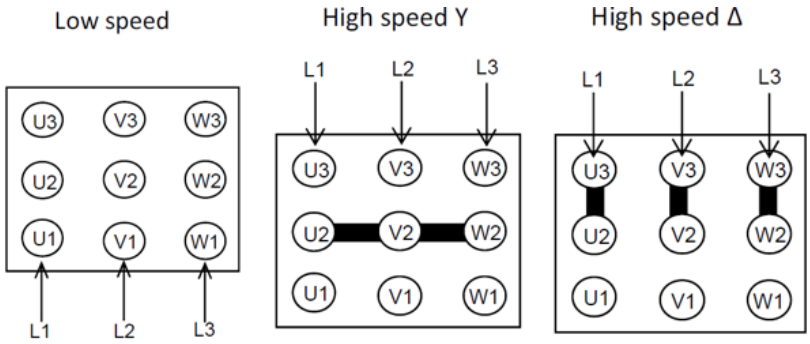

Figure 17. Three phase dual speed motor with separate windings, like 4/6-pole. Y/D-start at high speed.

11 Troubleshooting

Electrical failure	Cause	Solution
1 - Motor fails to start	1) Power supply is not switched on.	1) Check switch, fuses, contactors and motor cable lugs.
	2) Stator winding is broken.	2) Leave the motor to a skilled and certified service partner who will heat the broken part to the permissible insulation temperature to soften the varnish, pick up the disconnected wires and weld them. Then wrap the coils, varnish them and make them dry.
	3) Either winding earthed or short circuit between phases.	3) Leave the motor to skilled and certified service partner who will use the same method as 2) and make the earthed or short circuit portion insulated then varnish and dry the part.
	4) Connection mistakes in stator winding.	4) Leave the motor to skilled and certified service partner who will check connection diagram, heat the end turns and reconnect them correctly, then wrap, insulate and varnish them.
	5) Fuse burnt out.	5) Troubleshot and find out the cause. Replace the fuse with a new one.
	6) Wrong connection in the control device.	6) Check and correct the wiring connection.
2 - Fuse burnt after motor energized	1) Single-phase start.	1) Check power source cables, motor cables, fuses and switch contactors to find the broken wires or connection failures then solve the problems.
	2) Motor is overloaded or locked.	2) Adjust load value to rated one and deal with driven machine failure.

Electrical failure	Cause	Solution
3 - After energized, motor cannot start but has noise	1) Motor is overloaded or locked.	1) Inspect equipment and shoot the trouble.
	2) Check power sources so all phases have correct voltage.	2) Check connection of supply and/or feed. Replace fuse, fasten the loosened bolts the terminals, check the power source cables etc. with an instrument suitable for this work.
	3) too low voltage.	3) Change to Delta connection if it was misconnected as Star; Contact the power supply station if it is caused by power source; Adopt bigger cables if it is caused by the voltage drop of cables.
	4) Stearin grease or tight fitness for small-sized motors.	4) Select applicable grease and increase assembly quality.
4 - Live motor enclosure	1) Mix the power source cables and earthing cables.	1) Correct the mistake.
	2) Stator winding becomes damp and insulation ages severely.	2) Dry the motor and renew the aged insulation.
	3) Lead cables and terminal box are earthed.	3) Bind or renew outlet insulation and repair terminal box.
5 - Hard to start and speed lower than rated speed at full load	1) Power source voltage is too low.	1) Measure the power voltage at input points with a voltmeter or avometer and find the solution.
	2) Delta connection is misconnected as Star.	2) Change Star connection back to Delta.
	3) The rotor is coming off or broken.	3) Check and repair the rotor.
	4) Coils are more than original when rewound the winding.	4) Rewind the coils according to correct numbers.
	5) Winding gets moist or motor suffers from rain.	5) Heat to dry the motor.
	6) Aged winding insulation.	6) Coat the winding insulation or replace the insulation.
6 - Low insulation resistance	1) Winding gets moist or motor suffers from rain.	1) Heat to dry the motor.
	2) Aged winding insulation.	2) Coat the winding insulation or replace the insulation.

Electrical failure	Cause	Solution
7 - Abnormal noise during operation	1) Bearings are worn.	1) Repair or replace bearings.
	2) Stator or rotor core is loose.	2) Find the cause of vibration, re-press the core.
	3) Voltage is too high or unbalanced.	3) Measure the voltage on power source, find the cause and solve it.
	4) Bearing short of grease.	4) Clean the bearing and replenish grease with the amount of one-third to half of the bearing chamber volume.
	5) Fan contacts fan cover or the ventilation is blocked.	5) Repair fan and fan cowl and clear up ventilation area.
8 - Motor overheat or smoking	1) Too high power source voltage makes flux density in stator core oversaturated and results in high temperature rise.	1) If supply voltage excesses standard value too much, contact power supply department.
	2) Too low power source voltage makes high temperature rise at full load.	2) Replace the cables by bigger ones if it is caused by voltage drop. Contact the power supply department if it is caused by low voltage.
	3) Stator and rotor interfered.	3) If it is caused by larger bearing clearance, replace the bearing. If it is caused by the shaft which is bent, align it. Repair the core if it is loose or deformed.
	4) Motor overload or big resistance from the driven machine, which lead to high temperature.	4) Solve the trouble of driven machine, reduce load if exceeding rated current as per the indication, adopt a larger motor or increase the capacity.
	5) Frequently starting or too many reverse rotations.	5) Reduce number of starts and reverse rotations or adopt an applicable motor.
	6) Fan failure or poor ventilation.	6) Check the fan to see whether it is damaged or the blades are deformed or not fixed properly. Replace the fan if necessary.
9 - Unbalanced no load current at big difference	1) Unbalanced power source voltage.	1) Measure the source voltage to find the cause.
	2) Winding failures such as short circuit coils, wrongly connected coils and etc.	2) Disassemble the motor to check polarity and failures in windings, correct polarity or shoot the troubles.
	3) Coils and turns are not equally distributed after rewind the stator winding.	3) Rewind the stator winding as per the instructions.

Mechanical failure	Cause	Solution
1 - Vibration	1) Worn bearing or the poor bearing clearance.	1) Check bearing clearance.
	2) Air gaps are not even.	2) Adjust air gap to meet specifications.
	3) Unbalanced fan or rotor.	3) Find out the cause and balance the fan, the rotor or the motor.
	4) The rigidity of enclosure or the foundation is not strong enough.	4) Find the root to reinforce the enclosure rigidity or foundation. Align the motor and fasten it.
	5) Shaft is bent.	5) Align the shaft.
	6) Rotor core is deformed or loose.	6) Adjust the iron core and then stack it again.
	7) Loose mounting/fixing bolts.	7) Fasten the bolts or replace them by qualified ones.
2 - High bearing temperature	1) Either too much or too less grease.	1) Replenish the bearing with grease according to operation instructions.
	2) Poor grease with impurities.	2) Check the impurities of grease and change to clean grease.
	3) Oil seal is fit too tight.	3) Repair or replace the oil seal.
	4) Eccentric inner bearing cap contacts the shaft.	4) Repair inner bearing cap to keep proper gap with shaft.
	5) End shields or bearing caps are not assembled properly.	5) Put end shield or bearing cap into spigot by correct process and then fasten bolts evenly.
	6) Bearings are worn or dirt etc.	6) Replace the damaged bearing. Clean the dirt bearings thoroughly and replenish grease.
	7) Eccentric coupling connection or too tight belt.	7) Align the motor with driven machine and adjust the tension of belt.
	8) Improper bearing size.	8) Select proper bearing size.
	9) Too big or too less bearing clearance.	9) Replace the bearing.



Sweden

BEVI AB (Headquarters)
Blomstermåla
Tel. +46 499 271 00
Fax +46 499 200 08
info@bevi.se
www.bevi.se

BEVI AB (Regional office)
Umeå
Tel. +46 90 70 44 30
Fax +46 90 13 96 60
bevinord@bevi.se
www.bevi.se

Denmark

BEVI A/S
Hedehusene
Tel. +45 39 67 36 05
Fax +45 39 67 56 60
bevi@bevi.dk
www.bevi.dk

Finland

BEVI Finland OY AB
Espoo
Tel. +358 9 2709 1210
Fax +358 9 2709 1219
info@bevi.fi
www.bevi.fi

Norway

BEVI Norge AS
Oslo
Tel. +47 23 19 16 50
info@bevi.no
www.bevi.no

China

BEVI Electric Shanghai Co., Ltd.
Shanghai
Tel. +86 21 5032 5200
Fax +86 21 5032 5202
sales@bevi.cn
www.bevi.cn