GEFRAN

KS

PRESSURE TRANSMITTER



Main Features

- *Ranges: from 1 to 1000 bar*
- *Nominal Output Signal:*
  0...10Vdc (3 wires / 4...20mA (2 wires)
- *Compact size*
- *Wetted parts: Stainless steel*
- *SIL 2 certified according to IEC/EN 62061:2005*

KS transmitters are based on film sensing element deposited on stainless steel diaphragm.
Thanks to the latest state of the art SMD electronics and compact all stanless steel construction, these products are extremely robust and reliable, with SIL2 certification supplied as standard.
KS transmitters are suitable for all industrial applications, specially on hydraulics (presses, pumps, power pack, fluid power, etc.) with severe conditions usually with high level of shock, vibration, and pressure and temperature peaks.

TECHNICAL DATA

Output signal	**VOLTAGE**	**CURRENT**
Non Linearity (BFSL)	± 0.15% FS (typ) ± 0.25% FS (max)	
Hysteresis	+ 0.1% FS (typ) + 0.15% FS (max)	
Repeatability	± 0.025% FS (typ) ± 0.05% FS (max)	
Zero offset tolerance	± 0.15% FS (typ) ± 0.25% FS (max)	
Span offset tolarance	± 0.15% FS (typ) ± 0.25% FS (max)	
Accuracy at room temperature (1)	< ± 0.5% FS	
Pressure ranges (2)	From 1 bar to 1000 bar (See table)	
Resolution	Infinite	
Overpressure (without degrading performance)	See table	
Pressure containment (burst test)	See table	
Pressure Media	Fluids compatible with Stainless Steel AISI 430F and 17-4 PH	
Housing	Stainless Steel AISI 304	
Power supply	15...30Vdc	10...30Vdc
Dielectric strenght	250 Vdc	
Zero output signal	0 V (N); 0.1 V (C)	4 mA (E)
Full scale output signal	10 V (N); 10.1 V (C)	20 mA (E)
Allowed load	≥ 5KΩ	see load diagram
Long term stability	< 0.2% FS/per year	
Operating temperature range (process)	-40...+125°C (-40...+257°F)	
Operating temperature range (ambient)	-40...+105°C (-40...+221°F)	
Compensated temperature range	-20...+85°C (-4...+185°F)	
Storage temperature range	-40...+125°C (-40...+257°F)	
Temperature effects over compensated range (zero)	± 0.01% FS/°C typ. (± 0.02% FS/°C max.)	
Temperature effects over compensated range (span)	± 0.01% FS/°C typ. (± 0.02% FS/°C max.)	
Response time (10...90%FSO)	< 1 msec.	
Warm-up time (3)	< 30 sec.	
Mounting position effects	Negligible	
Humidity	Fino a 100%RH non-condensing	
Weight	80-120 gr. nominal	
Mechanical shock	100g/11msec according to IEC 60068-2-27	
Vibrations	20g max at 10...2000 Hz according to IEC 60068-2-6	
Ingress protection	IP65/IP67	
Output short circuit and reverse polarity protection	YES	
CE Conformity	According to EC Directive 2004/108/CE	

FS = Full scale
1 Incl. Non-Linearity, Hysteresis, Repeatability, Zero-offset and Span-offset (acc. to IEC 61298-2)
2 The operating pressure range is intended from 0.5% to 100% FS
3 Time within which the rated performance is achieved

PRESSURE RANGES

RANGE (Bar)	1	1.6	2	2.5	4	6	10	16	20	25	40	60	100	160	200	250	400	600	1000
Overpressure (Bar)	6	6	6	10	10	20	20	32	40	50	80	120	200	320	400	500	800	1200	1200
Burst pressure (Bar)	9	9	9	15	15	30	40	64	80	100	160	240	400	640	800	1000	1500	1500	1500

INSTALLATION DRAWINGS

Connector EN 175301-803 Form A

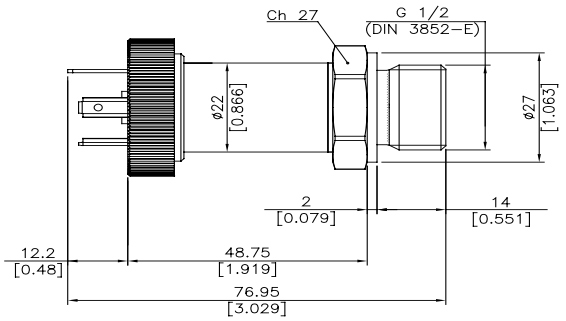

Connector EN 175301-803 Form A

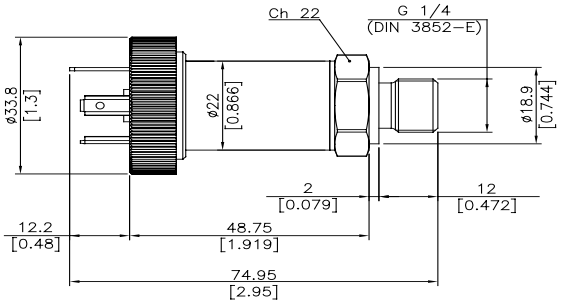

Connector EN 175301-803 Form C

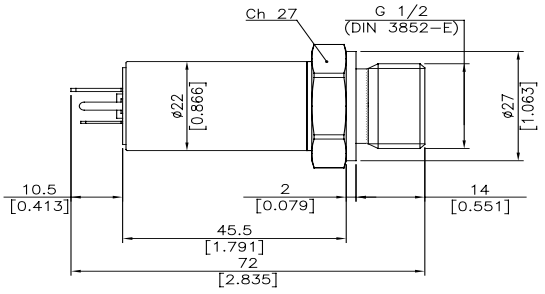

Connector EN 175301-803 Form C

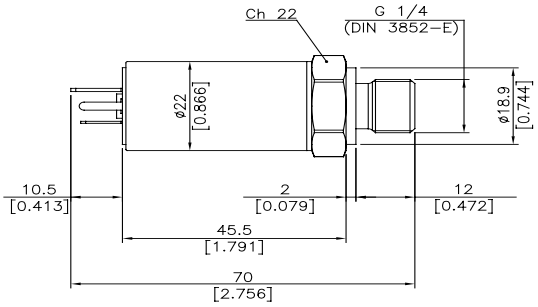

Connector M12x1

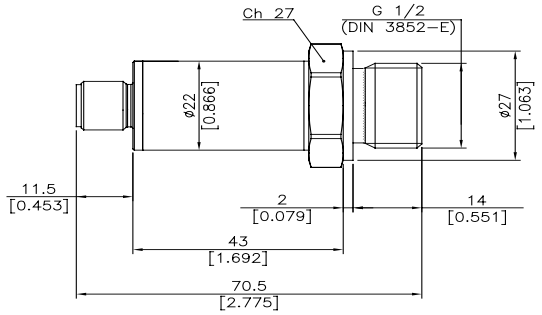

Connector M12x1

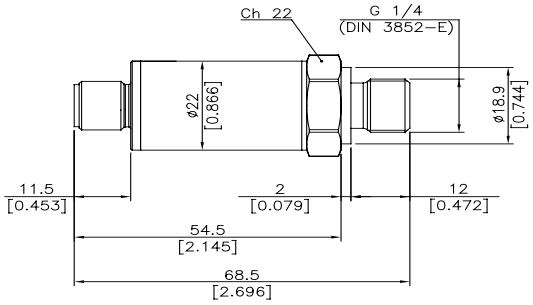

Dimensions in mm. [inches]

ELECTRICAL CONNECTION - Connectors

Z – 4 pin male connector M12 x 1

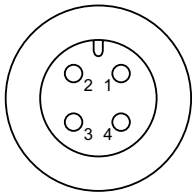

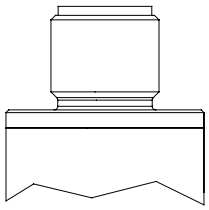

4 pin series 713
male connector
Protection IP67

E - EN 175301-803

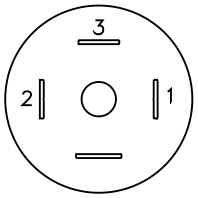

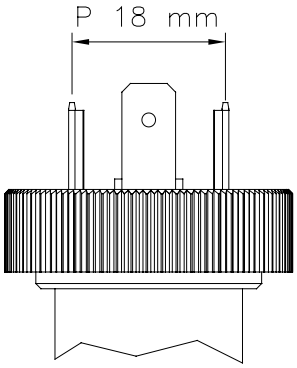

4 pin DIN Form A

Protection IP65

C – EN 175301-803

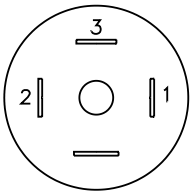

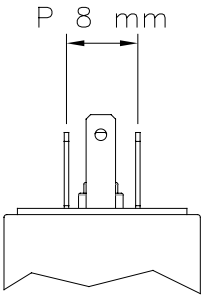

4 pin MicroDIN
Form C
Protection IP65

Notes:
1. The IP rating specified in this document normally applies with the suitable female connector plugged-in and properly wired.
2. The pressure transducers with measuring range of 60 bar and below require vented cable and/or mating connector, to allow the compensation of the atmospheric pressure reference.

ELECTRICAL CONNECTION - Connection diagrams

VOLTAGE AMPLFIED OUTPUT

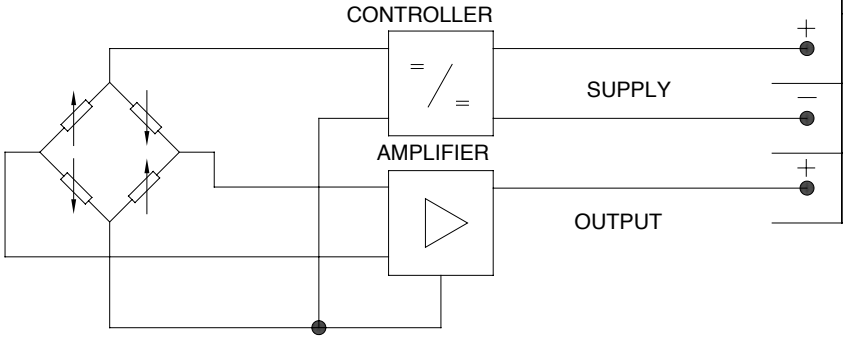

cod. C	cod. Z	cod. E
3	3	3
2	2	2
1	1	1

CURRENT AMPLIFIED OUTPUT - mod. **E**

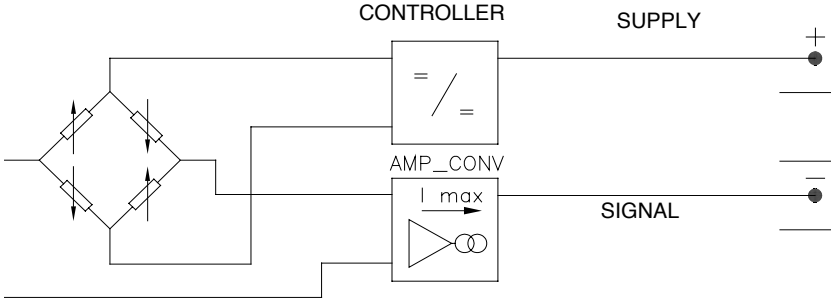

cod. C	cod. Z	cod. E
1	1	1
2	2	2

LOAD DIAGRAM

Current output

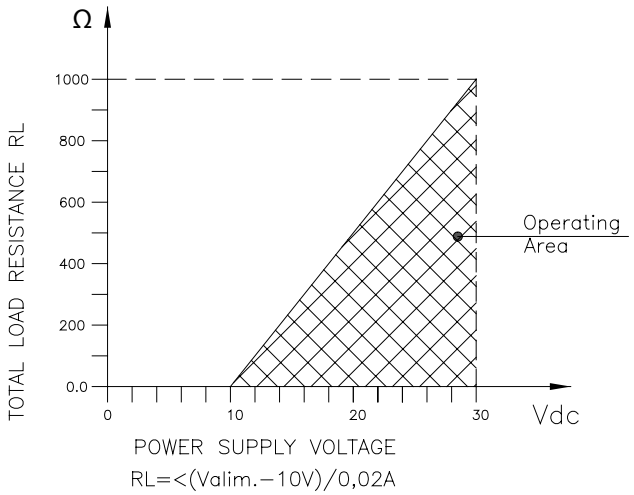

PRESSURE PEAKS PROTECTION

Many industrial applications, especially in hydraulics, could present dangerous phenomena like cavitation, liquid hammer or pressure peaks, due for example to pumps start and stop or fast closing of a valve.
These phenomena can be harmful to the transducer.

The KS series, upon request, is available with an integrated pressure snubber which, thanks to a 0.5 mm diameter through hole, eliminates these harmful peaks, to protect the transducer.

Contact Gefran to request the version with pressure snubber.

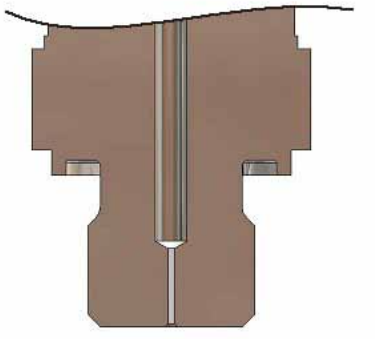

SIL CERTIFICATION (Safety Integrity Level) – FUNCTIONAL SAFETY

Safety is a critical requirement especially for machine builders. The new European Directive 2006/42/EC defines all the essential requirements in this regard.

In the context of functional safety, the European directive is received by the technical standard **IEC / EN 62061** "*Safety of machinery - Functional safety of safety-related electrical, electronic and programmable electronic control systems"(SRECS)*

KS pressure transmitters are certified SIL CL 2 by the Certification Body TÜV Rheinland with Test Report No.FS 28712235, in accordance with that rule, for use in applications "High Demand Mode" and then may be used in SRECS systems of machinery, where the safety variable to control will be the pressure of a fluid.

NOTES: 1)The SIL certification is supplied standard, and is available for pressure ranges from 0 ... 10 bar and above
2) For models with voltage amplified output, SIL certification is only available for versions with output at atmospheric pressure greater than zero volts (ie: 0.1 ... 10.1 V)
3) Full specifications and installation and user manual of KS certified SIL 2 can be downloaded directly from the website www.gefran.com

ACCESSORIES ON REQUEST

Connectors Plugs

Connection E	
EN 175301-803 4 pin DIN Form A (P 18) - Prot. IP65	**CON 064**
Connection Z	
4 pin connector M12 x 1 - Prot. IP67	**CON 293**
Connection C	
EN 175301-803 4 pin MicroDIN Form C (P 8) - Prot. IP65	**CON 047**

EXTENSION CABLES

IP67 female connector M12 x 1 + 2 m of cable	**CAV011**
IP67 female connector M12 x 1 + 5 m of cable	**CAV012**
IP67 female connector M12 x 1 + 10 m of cable	**CAV013**
IP67 female connector M12 x 1 + 15 m of cable	**CAV015**

Cable color code	
Pin	**Wire**
1	Brown
2	White
3	Blue
4	Black

ORDERING INFORMATION

Pressure transmitter **KS** ☐ ☐ ☐ ☐☐☐☐ ☐ ☐ ☐

OUTPUT SIGNAL	
0.1...10.1 Vdc	**C**
4...20 mA	**E**
0...10 Vdc	**N ***

* SIL Certification not available

PRESSURE CONNECTION	
G 1/4 gas male (DIN 3852-E)	**E**
G 1/2 gas male (DIN 3852-E)	**3**

ELECTRICAL CONNECTIONS	
4-pin connector micro-DIN (P8)	**C**
4 pin connector M12x1	**Z**
4-pin connector DIN (P 18)	**E**

Mechanical and/or electrical characteristics differing from standard may be arranged on request.

RESPONSE TIME	
V	Fast (< 1 msec)

ACCURACY	
M	± 0.5% FS

MEASUREMENT RANGE			
	bar		**bar**
B01U	1*	**B04D**	40
B1V6	1.6*	**B06D**	60
B02U	2*	**B01C**	100
B2V5	2.5*	**B16D**	160
B04U	4*	**B02C**	200
B06U	6*	**B25D**	250
B01D	10	**B04C**	400
B16U	16	**B06C**	600
B02D	20	**B01M**	1000
B25U	25		

* SIL certification not available

CALIBRATION STANDARDS

Instruments manufactured by Gefran are calibrated against precision pressure calibration equipment wich is traceable to International Standards.

Ex: KS - E - E - C - B04C - M - V
Pressure transmitter KS with 4 to 20 mA output signal, G1/4 male (DIN 3852-E) pressure connection, microDIN electrical connector, 0...400 bar pressure range, ± 0.50% FS accuracy, 1 msec response time.

Sensors are manufactured in compliance with: - EMC 2004/108/CE Compatibility Directive
- RoHS 2002/95/CE Directive
- 2006/42/CE Machinery Directive

Electrical installation requirements and Conformity certificate are available on our web site: www.gefran.com

GEFRAN spa reserves the right to make any kind of design or functional modification at any moment without prior notice.